CoDebt

Team_37_my_debtors

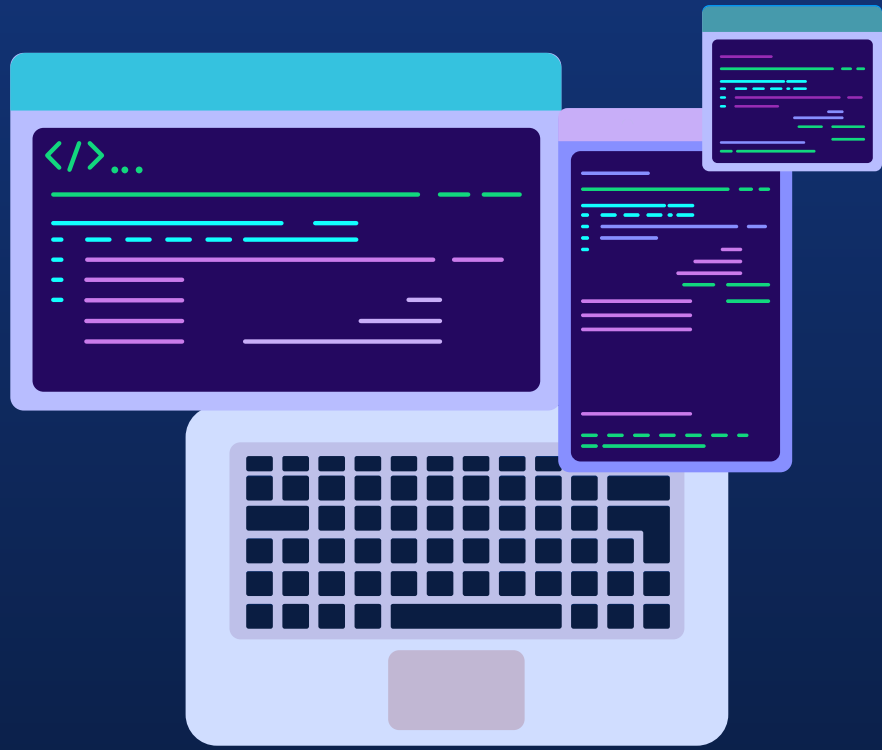

PROJECT SUMMARY

CoDebt is a web application that enables schools within a specified location view, interact and verify outstanding school fees debt information about potential/present/past students. This application seeks to solve the problem of students absconding or accruing debt and switching schools without offsetting outstanding fees.

CoDebt will give school admins that are authenticated users (users that pass all set requirements for authentication including but not limited to providing verifiable identification documents) the access to upload, retrieve, update, and delete a debtor profile.

Interactions between the school administration and other users/ parties will be implemented by the means of a comment box.

The guardians/parents of the student debtors are only allowed to view the database and will be given the opportunity to contend debt profiles where a case of contention arises. Contention of debt will first be initialised via a registration/sign up on CoDebt.

Product Design

IDEA FOR PRODUCT DESIGN

To the best of our knowledge, the platform will assist schools in recovery their debts and curb/stop the trend of debtors leaving to other schools with their debt unpaid.
We started with our Design process which we carried out in the following:-

- Empathize (User research, User interview)

-Define (User persona, Empathy map)

-Ideate (User flow, brainstorming, idea prioritization)

-Prototype (sketching wireframe , Low Fi, High Fi)

Access Team 37_my_debtors for more information on our research plan.

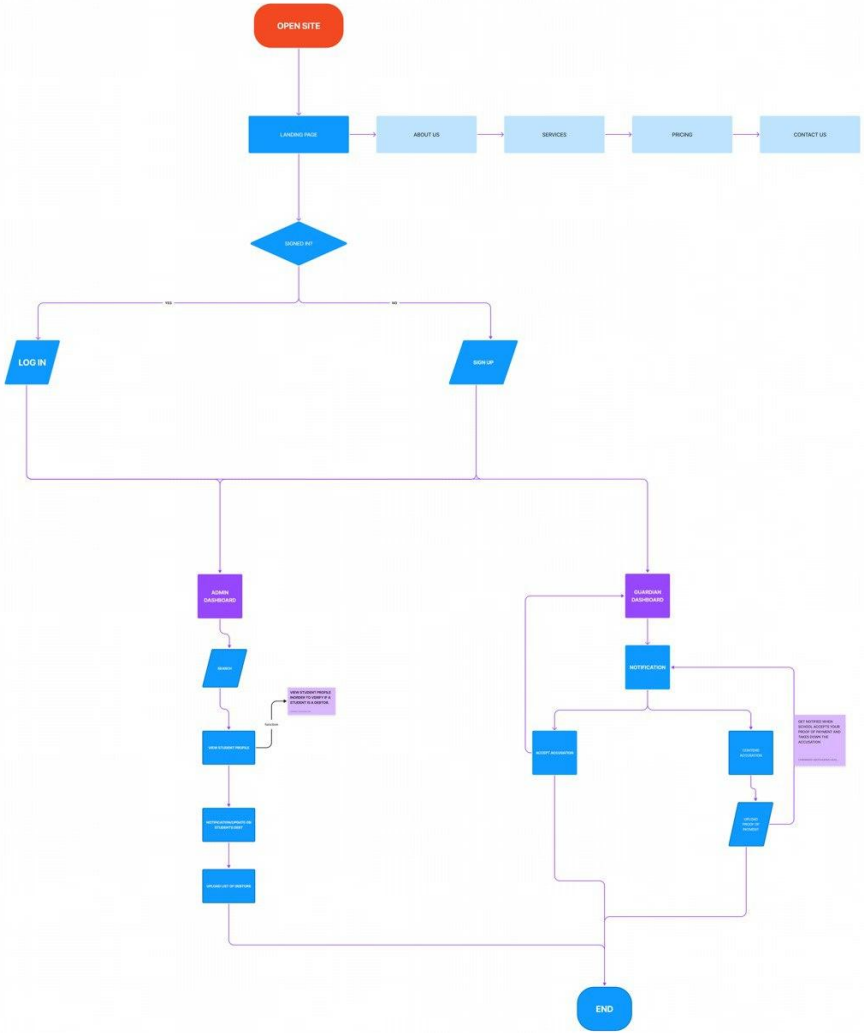

USER FLOW

Here we mapped out how users effectively move throughout the website (what actions will user's take on the website, what decision will user's make, and what screen will user's experience after taking an action or making a particular decision)
As such, the goal of our user flow is to map out how users achieve a specific goal as they move through the product.

Access Team 37_my_debtors for more information about our design process.

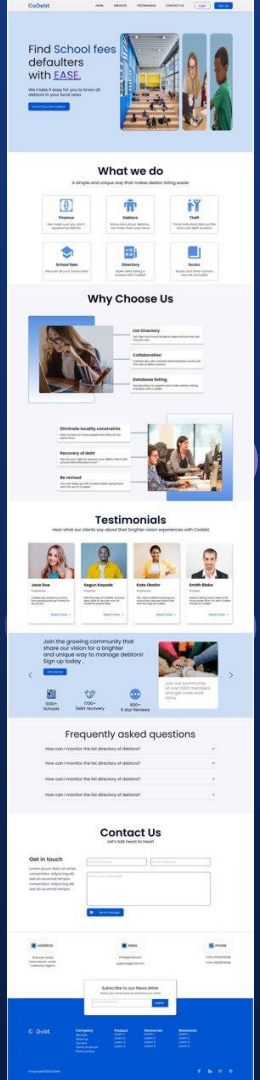

LANDING PAGE

Here just as the features of our project, it consisted of basic information about the platform that depicts what the website is basically all about/documentation that unauthenticated user can view and interact with. Although there's no access to Data.

Access Team 37_my_debtors to view our style guide and other design screens.

ADMIN DASHBOARD

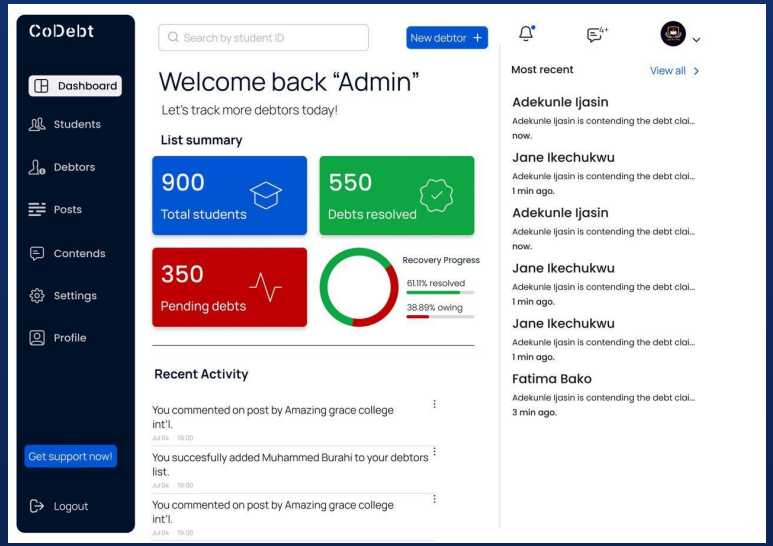

The school administration can view list of their debtors and students on the dashboard. There, they can access information about status of their payment recovery progress. When a student contend for a debt claim, they're notified and have the opportunity to reply such claim. They also get notifications of their recent activity.

Frontend Team

IDEA FROM FRONTEND TEAM

We have been collaborating and sharing codes via GitHub and replit.

We broke down the page available into different sections and assigned each section to someone in the team which was delivered.

We are implementing both the vanilla and the bootstrap library for our project.

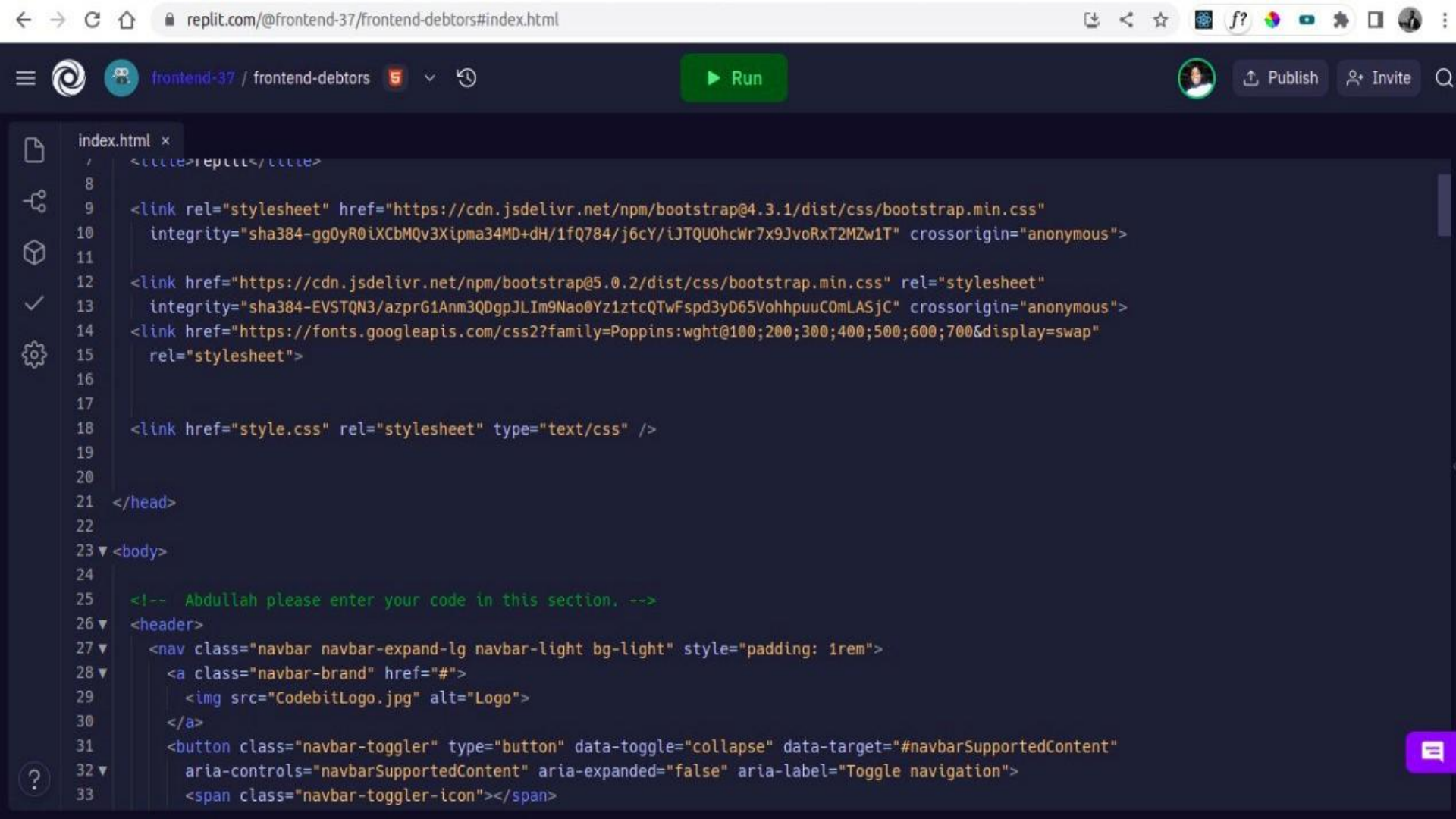

replit.com/@frontend-37/frontend-debtors#index.html

frontend-37 / frontend-debtors 5

Run

Publish Invite

index.html ×

```
  <title>replit</title>

  <link rel="stylesheet" href="https://cdn.jsdelivr.net/npm/bootstrap@4.3.1/dist/css/bootstrap.min.css"
    integrity="sha384-ggOyR0iXCbMQv3Xipma34MD+dH/1fQ784/j6cY/iJTQUOhcWr7x9JvoRxT2MZw1T" crossorigin="anonymous">

  <link href="https://cdn.jsdelivr.net/npm/bootstrap@5.0.2/dist/css/bootstrap.min.css" rel="stylesheet"
    integrity="sha384-EVSTQN3/azprG1Anm3QDgpJLIm9Nao0Yz1ztcQTwFspd3yD65VohhpuuCOmLASjC" crossorigin="anonymous">
  <link href="https://fonts.googleapis.com/css2?family=Poppins:wght@100;200;300;400;500;600;700&display=swap"
    rel="stylesheet">


  <link href="style.css" rel="stylesheet" type="text/css" />


</head>

<body>

  <!--  Abdullah please enter your code in this section. -->
  <header>
    <nav class="navbar navbar-expand-lg navbar-light bg-light" style="padding: 1rem">
      <a class="navbar-brand" href="#">
        <img src="CodebitLogo.jpg" alt="Logo">
      </a>
      <button class="navbar-toggler" type="button" data-toggle="collapse" data-target="#navbarSupportedContent"
        aria-controls="navbarSupportedContent" aria-expanded="false" aria-label="Toggle navigation">
        <span class="navbar-toggler-icon"></span>
```

replit.com/@frontend-37/frontend-debtors#index.html

frontend-37 / frontend-debtors

Run

Publish

Invite

index.html

```
100
101   <!--   Joy please your code here -->
102   <section class="contact-us">
103     <div class="container form-container">
104       <div class="row">
105         <div class="col-4 form-text">
106           <h3>Get in Touch</h3>
107           <p>
108             FOr further enquires and Question , you can always contact through the provided form
109           </p>
110         </div>
111         <div class="col-8">
112           <div class="text-center">
113             <h2>Contact US</h2>
114             <p>Lets talk heart to heart</p>
115           </div>
116           <div class="col-10 mt-5">
117             <form action="">
118               <div class="row">
119                 <div class=" col-6 mb-3">
120                   <input type="text" class="form-control" id="fullname" placeholder="Your fullname" />
121                 </div>
122                 <div class="col-6 mb-3">
123                   <input type="email" class="form-control" id="email" placeholder="Email address" />
124                 </div>
125
126
```

replit.com/@frontend-37/frontend-debtors#index.html

frontend-37 / frontend-debtors

Run

Publish

Invite

index.html

```
<!--   Daniel please your code here -->
<section class="faq">
  <div class="container">

    <h1>Frequently Asked Questions.</h1>
    <div class="accordion accordion-flush " id="accordionFlushExample">
      <div class="accordion-item">
        <h2 class="accordion-header" id="flush-headingOne">
          <button class="accordion-button collapsed" type="button" data-bs-toggle="collapse"
            data-bs-target="#flush-collapseOne" aria-expanded="false" aria-controls="flush-collapseOne">
            How can I monitor the list of directories of debtors.
          </button>
        </h2>
        <div id="flush-collapseOne" class="accordion-collapse collapse" aria-labelledby="flush-headingOne"
          data-bs-parent="#accordionFlushExample">
          <div class="accordion-body">Lorem ipsum dolor sit amet consectetur adipisicing elit. Voluptas, nulla
            corrupti quod vitae, neque aliquid optio ratione nobis culpa magni totam sequi modi quis maxime eaque
            dignissimos natus omnis velit.
          </div>
        </div>
      </div>
      <div class="accordion-item">
        <h2 class="accordion-header" id="flush-headingTwo">
          <button class="accordion-button collapsed" type="button" data-bs-toggle="collapse"
            data-bs-target="#flush-collapseTwo" aria-expanded="false" aria-controls="flush-collapseTwo">
            Accordion Item #2
```

Get In Touch

FOr further enquires and Question , you can always contact through the provided form

Contact US

Lets talk heart to heart

Your fullname

Email address

enter your message

Send Message

Frequently Asked Questions.

How can I monitor the list of directories of debtors.

Accordion Item #2

Accordion Item #3

Made with Replit

replit
frontend-debtors.frontend-37.repl.co/#

CoDebt

Get in Touch

FOr further enquires and Question , you can always contact through the provided form

Contact US

Lets talk heart to heart

Your fullname

Email address

enter your message

Send Message

Frequently Asked Questions.

How can I monitor the list of directories of debtors.

Made with Replit

Backend

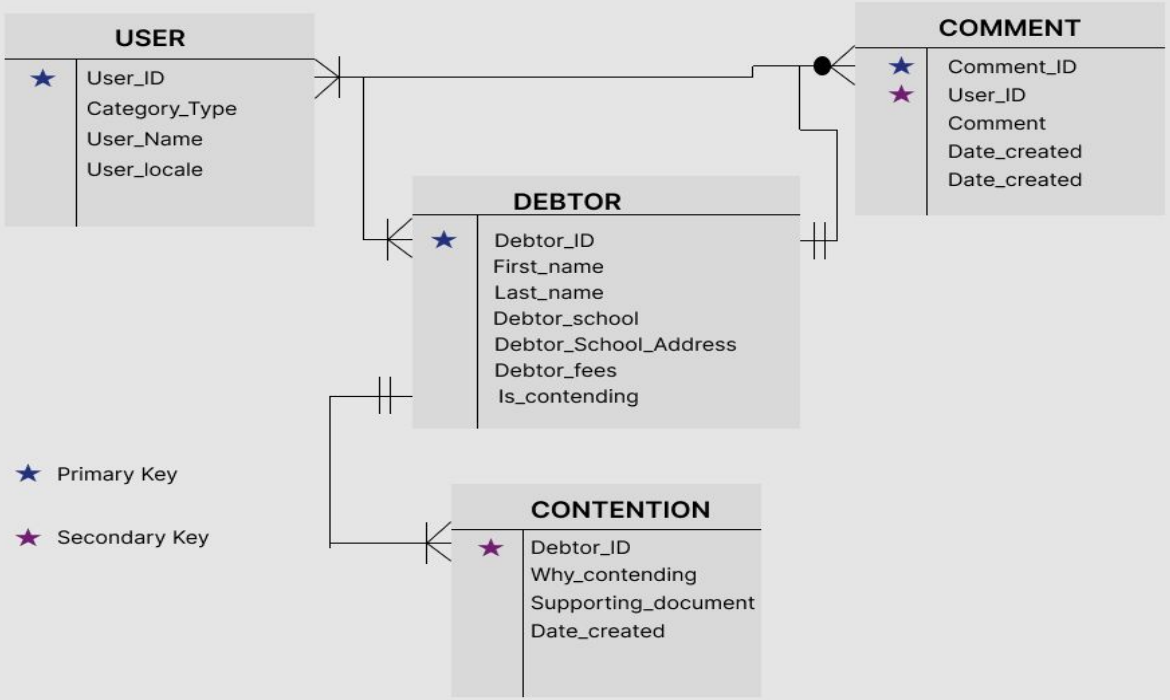
USER
User_ID
Category_Type
User_Name
User_locale
COMMENT
Comment_ID
User_ID
Comment
Date_created
Date_created
DEBTOR
Debtor_ID
First_name
Last_name
Debtor_school
Debtor_School_Address
Debtor_fees
Is_contending
CONTENTION
Debtor_ID
Why_contending
Supporting_document
Date_created
Primary Key
Secondary Key

The Functionalities that would be implemented in the development of the app are:

01

Searching Debtors

This should query the database and filter our students and display the ones who are owing.
It should also have an option to search users who are contending (different from debtors)

02

Login/Logout

This should be a form to accept login by email and password, it should then do server side validation to see if those details are correct in our db and login the user. The client side validation will be done by the FE team so you don't have to worry about it. Upon successful login, the user should be redirected to the home page. Logout is less tedious since there's no validation. That's why I put them together as one task

03

New User Registration

This will accept various user data and check the validity, if information entered is valid, the new information is stored in the database. Should also be redirected to the homepage after successful login

The Functionalities that would be implemented in the development of the app are:

04

Commenting

This is where users are able to comment under the posts by admins. It should be sorted by most recent comments.

05

Edit/Deleting debtors

This is a functionality available only to school admins. If the user has successfully cleared his debt or paid it in part. The admin can edit/delete his post.

06

Creating a new debtor post

This will enable school admins create a new post if a new debtor wan japa. Then publish the name on the site.

THANKS

Do you have any questions?

CREDITS: This presentation template was created by **Slidesgo**, including icons by **Flaticon**, infographics & images by **Freepik**