A Course Material on

EE606105-HIGH VOLTAGE ENGINEERING

By

Dr.A.Shiny Pradeepa

HOD/EEE

DEPARTMENT OF ELECTRICAL AND ELECTRONICS ENGINEERING

PSN COLLEGE OF ENGINERING AND TECHNOLOGY, TIRUNELVELI

EE606105-HIGH VOLTAGE ENGINEERING

AIM

To expose the students to various types of over voltage transients in power system and its effect on power system.

- Generation of over voltages in laboratory.
- Testing of power apparatus and system.

OBJECTIVES

i. To understand the various types of over voltages in power system and protection methods.
ii. Generation of over voltages in laboratories.
iii. Measurement of over voltages.
iv. Nature of Breakdown mechanism in solid, liquid and gaseous dielectrics.
v. Testing of power apparatus and insulation coordination.

UNIT I OVER VOLTAGES IN ELECTRICAL POWER SYSTEMS 6

Causes of over voltages and its effects on power system – Lightning, switching surges and temporary over voltages – protection against over voltages – Bewley's lattice diagram.

UNIT II ELECTRICAL BREAKDOWN IN GASES, SOLIDS AND LIQUIDS 10 Gaseous breakdown in uniform and non-uniform fields – Corona discharges – Vacuum breakdown – Conduction and breakdown in pure and commercial liquids – Breakdown mechanisms in solid and composite dielectrics.

UNIT III GENERATION OF HIGH VOLTAGES AND HIGH CURRENTS 10

Generation of High DC, AC, impulse voltages and currents. Tripping and control of impulse generators.

UNIT IV MEASUREMENT OF HIGH VOLTAGES AND HIGH CURRENTS 10

Measurement of High voltages and High currents – Digital techniques in high voltage measurement.

UNIT V HIGH VOLTAGE TESTING & INSULATION COORDINATION 9

High voltage testing of electrical power apparatus – Power frequency, impulse voltage and DC testing – International and Indian standards – Insulation Coordination.

TOTAL : 45 PERIODS

TEXT BOOK:

1. M. S. Naidu and V. Kamaraju, 'High Voltage Engineering', Tata McGraw Hill, 3rd Edition, 2004.

REFERENCES:

1. E. Kuffel and W. S. Zaengel, 'High Voltage Engineering Fundamentals', Pergamon Press, Oxford, London, 1986.
2. E. Kuffel and M. Abdullah, 'High Voltage Engineering', Pergamon Press, Oxford, 1970.
3. L. L. Alston, Oxford University Press, New Delhi, First Indian Edition, 2006.

S. No	TOPICS	PAGE No.
	UNIT I OVER VOLTAGES IN ELECTRICAL POWER SYSTEMS	
1	Causes of over voltages and its effects on power system	5
2	Lightning	6
3	Switching Surges	13
4	Temporary over Voltages	13
5	Protection Against Over Voltages	20
6	Bewley's Lattice Diagram	26
	UNIT II ELECTRICAL BREAKDOWN IN GASES, SOLIDS AND LIQUIDS	
7	Gaseous breakdown in uniform and non-uniform fields	28
8	Corona discharges	29
9	Vacuum breakdown	35
10	Conduction and breakdown in pure and commercial liquids	43
11	Breakdown mechanisms in solid and composite dielectrics	46
	UNIT III GENERATION OF HIGH VOLTAGES AND HIGH CURRENTS	
12	Generation of High DC, AC, impulse voltages and currents	55
13	Tripping, Control of Impulse Generators	87
	UNIT IV MEASUREMENT OF HIGH VOLTAGES AND HIGH CURRENTS	
14	Measurement of High voltages and High currents	91
15	Digital techniques in high voltage measurement	104
	UNIT V HIGH VOLTAGE TESTING & INSULATION COORDINATION	
16	High voltage testing of electrical power apparatus	113
17	Power frequency, impulse voltage and DC testing	117
18	International and Indian standards	146
19	Insulation Coordination	148
	UNIVERSITY QUESTION PAPERS	
	SHORT ANSWER QUESTIONS AND ANSWERS	154
	QUESTION BANK	176
	GLOSSARY	177

UNIT – I OVER VOLTAGES IN ELECTRICAL POWER SYSTEMS

1.1 NATURAL CAUSES OF OVER VOLTAGES

1.1.1 Introduction

Examination of over voltages on the power system includes a study of their magnitudes, shapes, durations, and frequency of occurrence. The study should be performed at all points along the transmission network to which the surges may travel **Types of Overvoltage**

- The voltage stresses on transmission network insulation are found to have a variety of Origins.
- In normal operation AC (or DC) voltages do not stress the insulation severely.
- Over voltage stressing a power system can be classified into two main types:

External overvoltage: generated by atmospheric disturbances of these disturbances, lightning is the most common and the most severe. Internal over voltages: generated by changes in the operating conditions of the network. Internal over voltages.

Lightning Over voltages Lightning is produced in an attempt by nature to maintain dynamic balance between the positively charged ionosphere and the negatively charged earth.

Over fair-weather areas there is a downward transfer of positive charges through the global air-earth current. This is then counteracted by thunderstorms, during which positive charges are transferred upward in the form of lightning. During thunderstorms, positive and negative charges are separated by the movements of air currents forming ice crystals in the upper layer of a cloud and rain in the lower part.

The cloud becomes negatively charged and has a larger layer of positive charge at its top. As the separation of charge proceeds in the cloud, the potential difference between the centers of charges _increases and the vertical electric field along the cloud also increases. The total potential difference between the two main charge centers may vary from l00 to 1000 MV. Only a part of the total charge-several hundred coulombs is released to earth by lightning; the rest is consumed in inter cloud discharges. The height of the thundercloud dipole above earth may reach5 km in tropical regions.



Figure: 1 Overvoltage Due To Arcing Ground

The Lightning Discharge

The channel to earth is first established by a stepped discharge called a leader stroke. The leader is initiated by a breakdown between polarized water droplets at the cloud base caused by the high electric field, or a discharge between the negative charge mass in the lower cloud and the positive charge pocket below it. (Figure 1.2) As the downward leader approaches the earth, an upward leader begins to proceed from earth before the former reaches earth. The upward leader joins the downward one at a point referred to as the striking point. This is the start of the return stroke, which progresses upward like a travelling wave on a transmission line

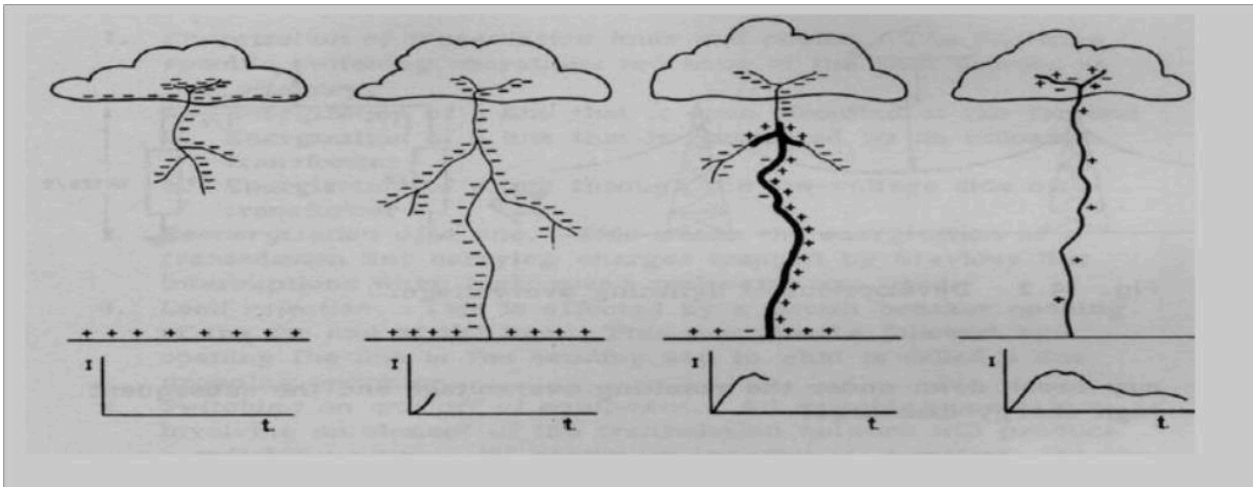

Figure:1.2 Developmental Stages Of A Lighting Flash And The Corresponding Current Surge

1.2 **LIGHTNING PHENOMENON**

At the earthling point a heavy impulse current reaching the order of tens of kilo amperes occurs, which is responsible for the known damage of lightning. The velocity of progression of the return stoke is very high and may reach half the speed of light. The corresponding current

heats its path to temperatures up to 20,000°C, causing the explosive air expansion that is heard as thunder. The current pulse rises to its crest in a few microseconds and decays over a period of tens or hundreds of microseconds.

Facts about Lightning

- A strike can average 100 million volts of electricity
- Current of up to 100,000 amperes
- Can generate 54,000
- Lightning strikes somewhere on the Earth every second
- Kills hundreds of people every year.
- Use The Five Second Rule Light travels at about 186,291 miles/second
- Sound travels at only 1,088 feet/second
- You will see the flash of lightning almostimmediately5280/1088= 4.9
- About 5 seconds for sound to travel 1 mile1 miles (statute) is equal to 1,609.34 meters.1 Feet are equal to 0.30 meters.

1.2.1 Lightning Voltage Surges

The most severe lightning stroke is that which strikes a phase conductor on the transmission line

- It produces the highest overvoltage for a given stroke current.
- The lightning stroke injects its current into a termination impedance Z, which in this case is half the line surge impedance Zo since the current will flow in both directions as shown In Figure1.3. Therefore, the voltage surge magnitude at the striking points = (½) IZo The lightning current magnitude is rarely less than 10 kA.
- For typical overhead line surge impedance Zo of 300 Ω, the lightning surge voltage will Probably have a magnitude in excess of1500 kV.

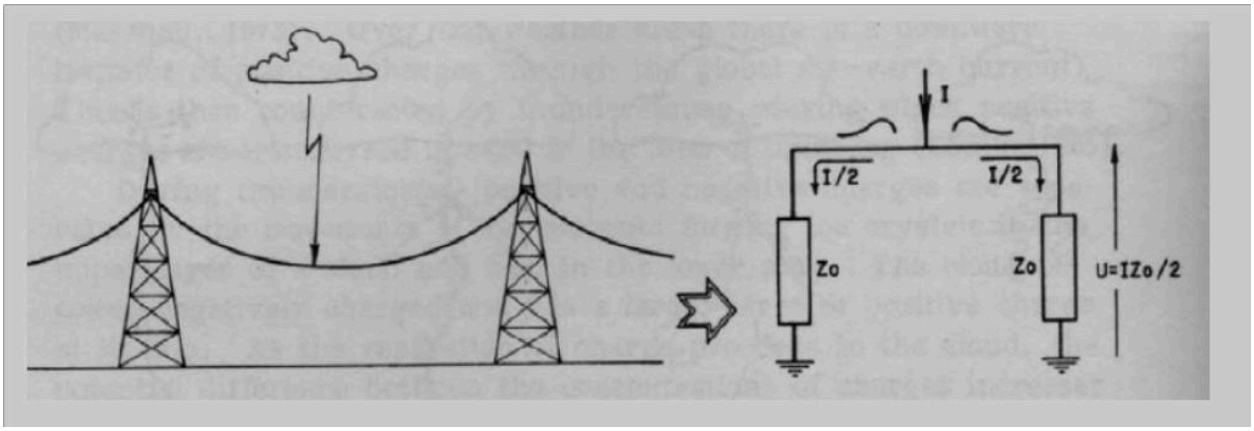

Figure:1.3 Developmental Lighting over voltage

EFFECT OF LIGHTNING

The impedance of the lightning channel itself is much larger than 1/2Zo (it is believed to range from l00to 3000 Ω).

- Lightning voltage surge will have the same shape characteristics.
- In practice the shapes and magnitudes of lightning surge waves get modified by their
- Reflections at points of discontinuity as they travel along transmission lines.
- Lightning strokes represent true danger to life, structures, power systems, and
- Communication networks.
- Lightning is always a major source of damage to power systems where equipment
- Insulation may break down, under the resulting overvoltage and the subsequent high-
- Energy discharge.

Lightning has been a source of wonder to mankind for thousands of years. Scotland points out that any real scientific search for the first time was made into the phenomenon of lightning by Franklin in18th century. Before going into the various theories explaining the charge formation in a thunder cloud and the mechanism of lightning, it is desirable to review some of the accepted facts concerning the thunder.

1.2.2 Cloud And The Associated Phenomenon.

- The height of the cloud base above the surrounding ground level may vary from 160 to 9,500m. The charged centers which are responsible for lightning are in the range of 300 to 1500 m.
- The maximum charge on a cloud is of the order of 10 coulombs which is built up exponentially
- over a period of perhaps many seconds or even minutes. The maximum potential of a cloud lies approximately within the range of 10 MV to 100 MV.
- The energy in a lightning stroke may be of the order of 250 kWhr.

- Raindrops:

Raindrops elongate and become unstable under an electric field, the limiting diameter being0.3 cm in a field of 100 kV/cm. A free falling raindrop attains a constant velocity with respect to the air depending upon its size. This velocity is 800 cms/sec. for drops of the size 0.25 cm dia. and is zero for spray. This means that in case the air currents are moving upwards with a velocity greater than 800 cm/sec, no rain drop can fall. Falling raindrops greater than 0.5 cm in dia become unstable and break up into smaller drops. When a drop is broken up by air currents, the water particles become positively charged and the air negatively charged. When ice crystal strikes with air currents, the ice crystal is negatively charged and the air positively charged.

Wilson's Theory of Charge Separation Wilson's theory is based on the assumption that a large number of ions are present in the atmosphere. Many of these ions attach themselves to small dust particles and water particles. It also assumes that an electric field exists in the earth's atmosphere during fair weather which is directed downwards towards the earth (Figure.1.4 (a)). The intensity of the field is approximately 1 volt/cm at the surface of the earth and decreases gradually with height so that at 9,500 m it is only about 0.02 V/cm. A relatively large raindrop (0.1 cm radius) falling in this field becomes polarized, the upper side acquires a negative.

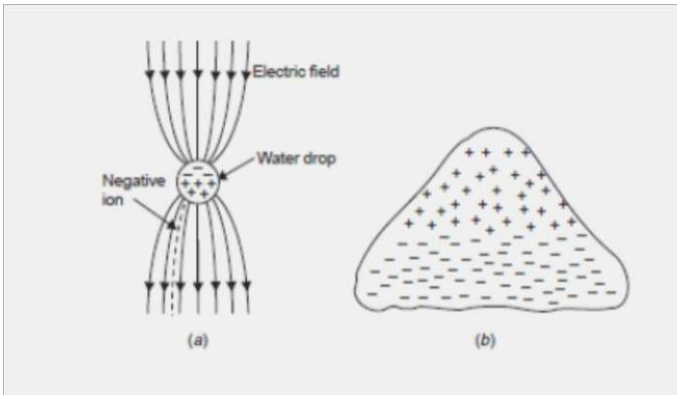

Figure:1.4 (a) Capture of negative ions by large falling drop; (b) Charge separation in a thunder cloud according to Wilson's theory.

Wilson's Theory of Charge Separation

Wilson's theory is based on the assumption that a large number of ions are present in the atmosphere. Many of these ions attach themselves to small dust particles and water particles. It also assumes that an electric field exists in the earth's atmosphere during fair weather which is directed downwards towards the earth (Figure.1.4 (a)). The intensity of the field is approximately 1 volt/cm at the surface of the earth and decreases gradually with height so that at 9,500 m it is only about 0.02 V/cm. A relatively large raindrop (0.1 cm radius) falling in this field becomes

polarized, the upper side acquires a negative charge and the lower side a positive charge. Subsequently, the lower part of the drop attracts –ve charges from the atmosphere which are available in abundance in the atmosphere leaving a preponderance of positive charges in the air.

The upwards motion of air currents tends to carry up the top of the cloud, the +ve air and smaller drops that the wind can blow against gravity. Meanwhile the falling heavier raindrops which are negatively charged settle on the base of the cloud. It is to be noted that the selective action of capturing –ve charges from the atmosphere by the lower surface of the drop is possible. No such selective action occurs at the upper surface. Thus in the original system, both the positive and negative charges which were mixed up, producing essentially a neutral space charge, are now separated.

Thus according to Wilson‘s theory since larger negatively charged drops settle on the base of the cloud and smaller positively charged drops settle on the upper positions of the cloud, the lower base of the cloud is negatively charged and the upper region is positively charged (Figure.1.4 (b)). **Simpson’s and Scarse Theory** Simpson‘s theory is based on the temperature variations in the various regions of the cloud. When water droplets are broken due to air currents, water droplets acquire positive charges whereas the air is negatively charged. Also when ice crystals strike with air, the air is positively charged and the crystals negatively charged. The theory is explained with the help of Fig. 1.5.

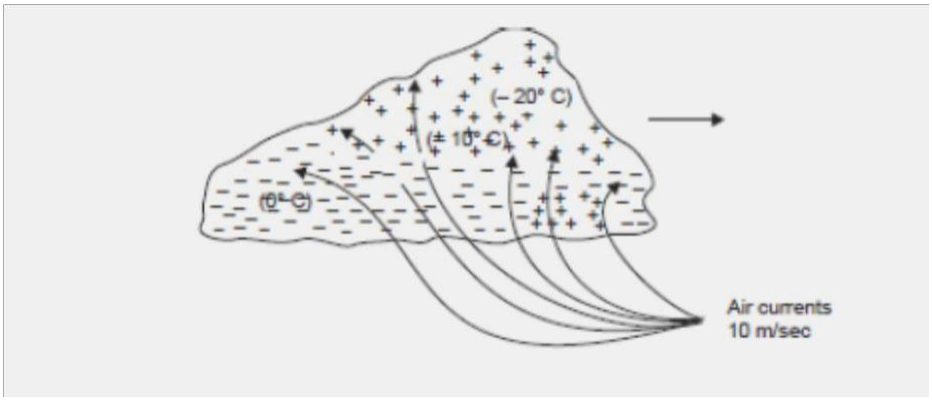

Figure:1.5 Charge generation and separation in a thunder

cloud according to Simpson‘s theory Let the cloud move in the direction from left to right as shown by the arrow. The air currents are also shown in the diagram. If the velocity of the air currents is about 10 m/sec in the base of the cloud, these air currents when collide with the water particles in the base of the cloud, the water drops are broken and carried upwards unless they combine together and fall down in a pocket as shown by a pocket of positive charges (right bottom region in Fig. 7.23). With the collision of water particles we know the air is negatively charged and the water particles positively charged. These negative charges in the air are immediately absorbed by the cloud particles which are carried away upwards with the air currents. The air currents go still higher in the cloud where the moisture freezes into ice crystals.

The air currents when collide with ice crystals the air is positively charged and it goes in the upper region of cloud whereas the negatively charged ice crystals drift gently down in the lower region of the cloud. This is how the charge is separated in a thundercloud. Once the charge separation is complete, the conditions are now set for a lightning stroke.

Mechanism of Lightning Stroke Lightning phenomenon is the discharge of the cloud to the ground. The cloud and the ground form two plates of a gigantic capacitor and the dielectric medium is air. Since the lower part of the cloud is negatively charged, the earth is positively charged by induction. Lightning discharge will require the puncture of the air between the cloud and the earth. For breakdown of air at STP condition the electric field required is 30 kV/cm peak. But in a cloud where the moisture content in the air is large and also because of the high altitude (lower pressure) it is seen that for breakdown of air the electric field required is only 10 kV/cm. The mechanism of lightning discharge is best explained with the help of Fig. 1.6. After a gradient of approximately 10 kV/cm is set up in the cloud, the air surrounding gets ionized. At this a streamer (Fig. 1.6(a)) starts from the cloud towards the earth which cannot be detected with the naked eye; only a spot travelling is detected.

The current in the streamer is of the order of 100 amperes and the speed of the streamer is 0.16 m/μ sec. This streamer is known as pilot streamer because this leads to the lightning phenomenon. Depending upon the state of ionization of the air surrounding the streamer, it is branched to several paths and this is known as stepped leader (Fig.1.6(b)). The leader steps are of the order of 50 m in length and are accomplished in about a microsecond. The charge is brought from the cloud through the already ionized path to these pauses. The air surrounding these pauses is again ionized and the leader in this way reaches the earth (Fig.1.6(c)).Once the stepped leader has made contact with the earth it is believed that a power return stroke(Fig. 1.6(c)) moves very fast up towards the cloud through the already ionized path by the leader. This streamer is very intense where the current varies between 1000 amps and 200,000 amps and the speed is about 10% that of light. It is here where the –ve charge of the cloud is being neutralized by the positive induced charge on the earth (Fig. 1.6 (d)).

It is this instant which gives rise to lightning flash which we observe with our naked eye. There may be another cell of charges in the cloud near the neutralized charged cell. This charged cell will try to neutralize through this ionized path. This streamers known as dart leader (Fig.1.6 (e)). The velocity of the dart leader is about 3% of the velocity of light. The effect of the dart leader is much more severe than that of the return stroke. The discharge current in the return streamer is relatively very large but as it lasts only for a few microseconds the energy contained in the streamer is small and hence this streamer is known as cold lightning stroke whereas the dart leader is known as hot lightning stroke because even though the current in this leader is relatively smaller but it lasts for some milliseconds and therefore the energy contained in this leader is relatively larger.

It is found that each thunder cloud may contain as many as 40 charged cells and a heavy lightning stroke may occur. This is known as multiple stroke. 1.2.3 Line Design Based On Lightning The severity of switching surges for voltage 400 kV and above is much more than that due to lightning voltages. All the same it is desired to protect the transmission lines against direct lightning strokes. The object of good line design is to reduce the number of outages caused by

lightning. To achieve this following actions are required. (I) The incidence of stroke on to power conductor should be minimized. (ii) The effect of those strokes which are incident on the system should be minimized. To achieve (i) we know that lightning normally falls on tall objects; thus tall towers are more vulnerable to lightning than the smaller towers. In order to keep smaller tower height for a particular ground clearance, the span lengths will decrease which requires more number of towers and hence the associated accessories like insulators etc. The cost will go up very high. Therefore, a compromise has to be made so that adequate clearance is provided, at the same time keeping longer span and hence lesser number of towers.

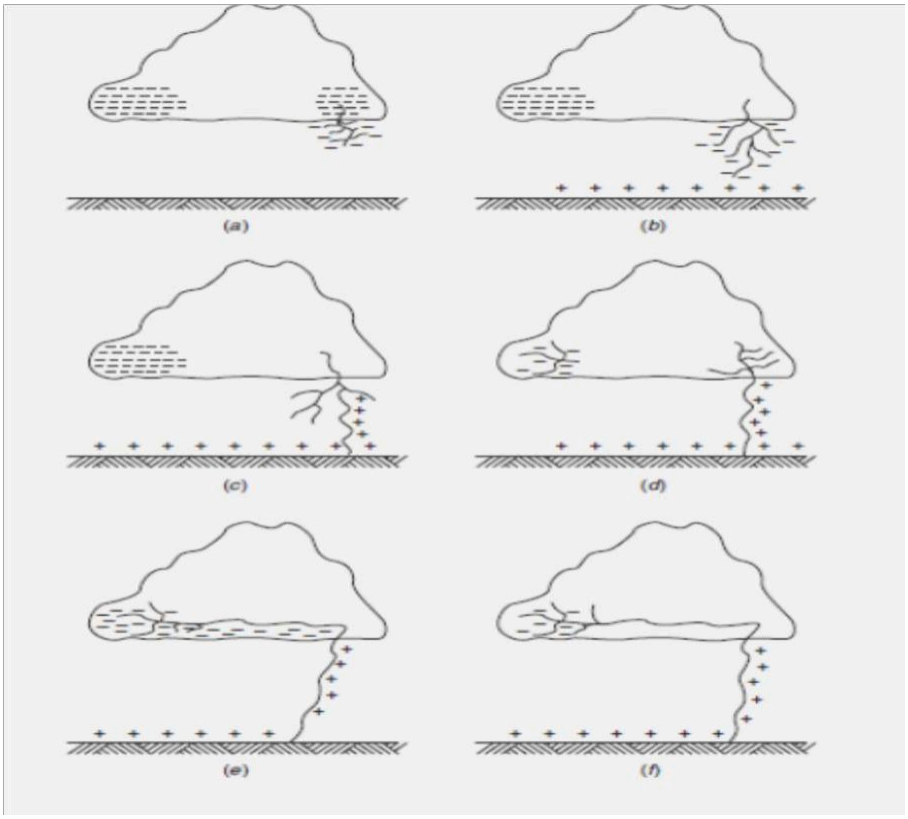

Figure:1.6 Lightning mechanism

With a particular number of towers the chances of incidence of lightning on power conductor scan be minimized by placing a ground wire at the top of the tower structure. . The tower presents a discontinuity to the travelling waves; therefore they suffer reflections and refraction. The system is, then, equivalent to a line bifurcated at the towerpoint.We know that the voltage and current transmitted into the tower will depend upon the surge impedance of the tower and the ground impedance (tower footing resistance) of the tower. If it is low, the wave reflected back up the tower will largely remove the potential existing due to the incident wave. In this way the chance of flashover is eliminated. If, on the other hand, the incident wave encounters high ground impedance, positive reflection will take place and the potential on the

top of the tower structure will be raised rather than lowered. It is, therefore, desired that for good line design high surge impedances in the ground wire circuits, the tower structures and the tower footing should be avoided.

1.3 OVER VOLTAGES DUE TO SWITCHINGSURGES

The increase in transmission voltages needed to fulfill the required increase in transmitted powers, switching surges have become the governing factor in the design of insulation for EHV and UHV systems. In the meantime, lightning over voltages come as a secondary factor in these networks. There are two fundamental reasons for this shift in relative importance from lightning to switching surges as higher transmission voltages are called for:

- Overvoltages produced on transmission lines by lightning strokes are only slightly dependent on the power systemvoltages.As a result, their magnitudes relative to the system peak voltage decrease as the latter is increased.
- External insulation has its lowest breakdown strength under surges whose fronts fall in the range 50-500 micro sec.,which is typical for switching surges.
- According to the International Electro-technical Commission(IEC) recommendations, all equipment designed for operating voltages above 300 kV should be tested under switching impulses (i.e., laboratory-simulated switching surges).

Temporary over voltages

The purpose of this Guide is to provide information on transient and temporary over voltages and currents in end-user AC power systems. With this information in hand, equipment designers and users can more accurately evaluate their operating environment to determine the need for surge protective devices (SPDs) or other mitigation schemes. The Guide characterizes electrical transmission and distribution systems in which surges occur, based upon certain theoretical considerations as well as on the data that have been recorded in interior locations with particular emphasis on industrial environments. There are no specific mathematical models that simulate all surge environments; the complexities of the real world need to be simplified to produce a manageable set of standard surge tests. To this end, a scheme to classify the surge environment is presented.

This classification provides a practical basis for the selection of surge-voltage and surge-current waveforms and amplitudes that can be applied to evaluate the capability of equipment to withstand surges when connected to power circuits. The fundamental approach to electromagnetic compatibility (EMC) in the arena of surges is the requirement that equipment immunity and characteristics of the surge environment characteristics should be properly coordinated. By definition, the duration of the surges considered in this Guide do not exceed a one-half period of the normal mains waveform. They can be periodic or random events and might appear in any combination of line, neutral, or grounding conductors. They include those surges with amplitudes, durations, or rates of change sufficient to cause equipment damage or

operational upset (see Figure1.7). Surge protective devices acting primarily on the voltage are often applied to divert damaging surges, but the upset can require other remedies.

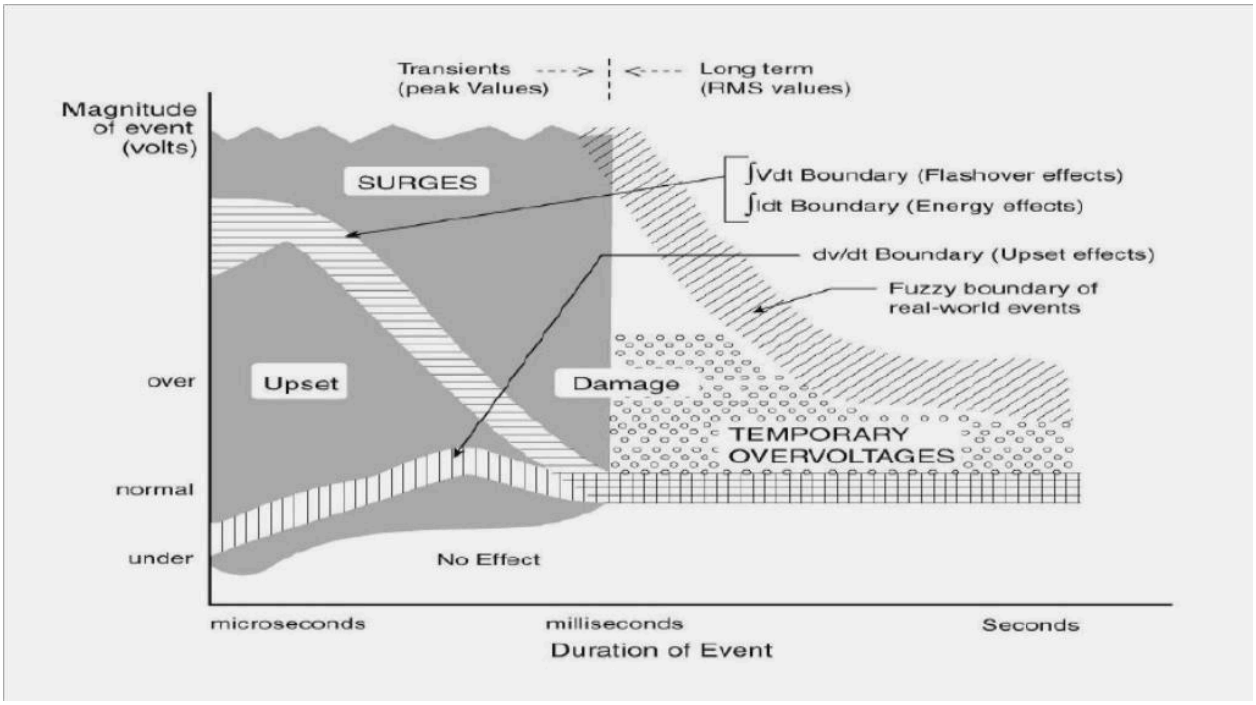

Figure:1.7 Simplified relationship among voltage, duration, rate of change, and effect on equipment.

Temporary over voltages represent a threat to equipment as well as to any surge protective devices that may have been provided for the mitigation of surges. The scope of this Guide includes temporary over voltages only as a threat to the survival of SPDs, and therefore includes considerations on the selection of suitable SPDs. No equipment performance requirements are specified in this Guide. What is recommended is a rational, deliberate approach to recognizing the variables that need to be considered simultaneously, using the information presented here to define a set of representative situations. For specific applications, the designer has to take into consideration not only the rates of occurrence and the waveforms described in this Guide, but also the specific power system environment and the characteristics of the equipment in need of protection. As an example, the following considerations are necessary to reach the goal of practical surge immunity:

- Desired protection
- Hardware
- integrity Process
- immunity
- Specific equipment sensitivities
- The power environment
  Surge characteristics

- Electrical system
- Performance of surge protective devices
- Protection
- Lifetime
- The test environment
- Cost effectiveness

Answers may not exist that address all of the questions raised by the considerations listed above. In particular, those related to specific equipment sensitivities, both in terms of component failure and especially in terms of processing errors, might not be available to the designer. The goal of the reader may be simply selecting the most appropriate device from among the various surge protective devices available and meet the requirements of the equipment that they must protect. Subsets of the considerations in this section might then apply, and the goal of the reader may then be the testing of various surge protective devices under identical test conditions. The following can guide the reader in identifying parameters, seeking further facts, or quantifying a test plan.

Desired Level of Protection

The desired level of protection can vary greatly depending upon the application. For example, in applications not involving online performance, protection may only be needed to reduce hardware failures by a certain percentage. In other cases, such as data processing or critical medical or manufacturing processes, any interruption or upset of a process might be unacceptable. Hence, the designer should quantify the desired goal with regard to the separate questions of hardware failure and process interruption or upset.

Equipment Sensitivities

Specific equipment sensitivities should be defined in concert with the above-mentioned goals. The sensitivities (immunity) will be different for hardware failure or process upset. Such definitions might include: maximum amplitude and duration of the surge remnant that can be tolerated, wave-form or energy sensitivity, et cetera.

Power Environment

The applicable test waveforms recommended in this Guide should be quantified on the basis of the location categories and exposure levels as explained in the corresponding clauses of the Guide. The magnitude of the rams voltage, including any anticipated variation, should be quantified. Successful application of surge protective devices requires taking into consideration occasional abnormal occurrences. It is essential that an appropriate selection of the SPD limiting voltage is based on actual characteristics of the mains voltage.

Performance of Surge Protective Devices

Evaluation of a surge protective device should verify a long life in the presence of both the surge and electrical system environments described above. At the same time, its remnant and voltage levels should provide a margin below the immunity levels of the equipment in order to

achieve the desired protection. It is essential to consider all of these parameters simultaneously. For example, the use of a protective device rated very close to the nominal system voltage might provide attractive remnant figures, but can be unacceptable when a broad range of occasional abnormal deviations in the amplitude of the mains waveform are considered. Lifetime or overall performance of the SPDs should not be sacrificed for the sake of a low remnant.

Test Environment

The surge test environment should be carefully engineered with regard to the preceding considerations and any other parameters that are important to the user. A typical description of the test-environment includes definitions of simultaneous voltages and currents, along with proper demonstrations of short-circuit.

It is important to recognize that the specification of an open-circuit voltage without simultaneous short-circuit current capability is meaningless. Cost Effectiveness The cost of surge protection can be small, compared to overall system cost and benefits in performance. Therefore, added quality and performance in surge protection may be chosen as a conservative engineering approach to compensate for unknown variables in the other parameters. This approach can provide excellent performance in the best interests of the user, while not significantly affecting overall system cost.

Definitions

The definitions given here have been developed by several standards-writing organizations and have been harmonized.

Back Flashover (Lightning):

A flashover of insulation resulting from a lightning strike to part of a network or electrical installation that is normally at ground potential. Blind Spot: A limited range within the total domain of application of a device, generally at values less than the maximum rating. Operation of the equipment or the protective device itself might fail in that limited range despite the device's demonstration of satisfactory performance at maximum ratings.

Clamping Voltage:

Deprecated term. See measured limiting voltage.

Combination Surge (Wave): A surge delivered by an instrument which has the inherent capability of applying a 1.2/50 us voltage wave across an open circuit, and delivering an 8/20 us current wave into a short circuit. The exact wave that is delivered is determined by the instantaneous impedance to which the combination surge is applied.

Combined Multi-Port Spd: A surge protective device integrated in a single package as the means of providing surge protection at two or more ports of a piece of equipment connected to different systems (such as a power system and a communications system).

Coordination Of Spds (Cascade): The selection of characteristics for two or more SPDs to be connected across the same conductors of a system but separated by some decoupling impedance such that, given the parameters of the impedance and of the impinging surge, this selection will ensure that the energy deposited in each of the SPDs is commensurate with its rating.

Direct Strike: A strike impacting the structure of interest or the soil (or objects) within a few meters from the structure of interest. Energy Deposition: The time integral of the power dissipated in a clamping-type surge protective device during a current surge of a specified waveform. Failure Mode: The process and consequences of device failure.

Leakage Current: Any current, including capacitive coupled currents, that can be conveyed from accessible parts of a product to ground or to other accessible parts of the product.

Lightning Protection System (LPS): The complete system used to protect a space against the effects of lightning. It consists of both external and internal lightning protection systems.

Lightning Flash To Earth: An electrical discharge of atmospheric origin between cloud and earth consisting of one or more strikes.

Lightning Strike: A single electrical discharge in a lightning flash to earth.

Mains: The AC power source available at the point of use in a facility. It consists of the set of electrical conductors (referred to by terms including service entrance, feeder, or branch circuit) for delivering power to connected loads at the utilization voltage level.

Maximum continuous operating voltage (MCOV): The maximum designated root-mean-square (rms) value of power-frequency voltage that may be applied continuously between the terminals of the arrester.

Measured limiting voltage: The maximum magnitude of voltage that appears across the terminals of the SPD during the application of an impulse of specified wave shape and amplitude.

Nearby strike: A strike occurring in the vicinity of the structure of interest.

Nominal System Voltage: A nominal value assigned to designate a system of a given voltage class.

Nominal Arrestor voltage: The voltage across the arrestor measured at a specified pulsed DC current, IN(dc), of specific duration. IN(dc) is specified by the arrestor manufacturer.

One-Port SPD: An SPD having provisions (terminals, leads, plug) for connection to the AC power circuit but no provisions (terminals, leads, receptacles) for supplying current to the AC power loads.

Open-circuit voltage (OCV) : The voltage available from the test set up (surge generator, coupling circuit, back filter, connecting leads) at the terminals where the SPD under test will be connected.

Point of strike: The point where a lightning strike contacts the earth, a structure, or an LPS.

Pulse life: The number of surges of specified voltage, current amplitudes, and wave shapes that may be applied to a device without causing degradation beyond specified limits. The pulse life applies to a device connected to an AC line of specified characteristics and for pulses sufficiently spaced in time to preclude the effects of cumulative heating.

Response time (arrestor): The time between the point at which the wave exceeds the limiting voltage level and the peak of the voltage overshoot. For the purpose of this definition, limiting voltage is defined with a 8/20 Its current waveform of the same peak Current amplitude as the waveform used for this response time.

Short-Circuit Current (Scc): The current which the test set up (surge generator, coupling circuit, back filter, connecting leads) can deliver at the terminals where the SPD under test will be connected, with the SPD replaced by bonding the two lead terminals. (Also sometimes abbreviated as SCI).

SPD disconnect or: A device for disconnecting an SPD from the system in the event of SPD failure. It is to prevent a persistent fault on the system and to give a visible indication of the SPD failure.

Surge Response Voltage: The voltage profile appearing at the output terminals of a protective device and applied to downstream loads, during and after a specified impinging surge, until normal stable conditions are reached.

Surge Protective device (SPD): A device that is intended to limit transient overvoltages and divert surge currents. It contains at least one nonlinear component—a surge reference equalizer. A surge protective device used for connecting equipment to external systems whereby all conductors connected to the protected load are routed—physically and electrically—through a single enclosure with a shared reference point between the input and output ports of each system.

Swell: A momentary increase in the power frequency voltage delivered by the mains, outside of the normal tolerances, with a duration of more than one cycle and less than a few seconds.

1.3.1 Switching Surge Test Voltage Characteristics

Switching surges assume great importance for designing insulation of overhead lines operating at voltages more than 345 kV. It has been observed that the flashover voltage for various geometrical arrangements under unidirectional switching surge voltages decreases with increasing the front duration of the surge and the minimum switching surge corresponds to the range between 100 and 500 μsec. However, time to half the value has no effect as flashover takes place either at the crest or before the crest of the switching surge. Fig.1.8 gives the relationship

between the critical flashover voltage per meter as a function of time to flashover for on a 3 m rod-rod gap and a conductor-plane gap.

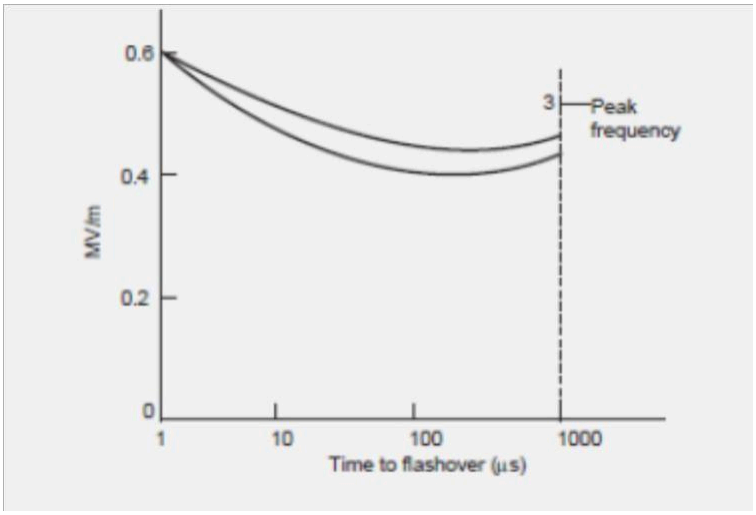

Figure: 1.8 Variation of F.O. V/m as a function of time to flashover

It can be seen that the standard impulse voltage (1/50 μ sec) gives highest flashover voltage and switching surge voltage with front time varying between 100 to 500 μ sec has lower flashover voltages compared to power frequency voltage. The flashover voltage not only depends upon the crest time but upon the gap spacing and humidity for the same crest time surges.

It has been observed that the switching surge voltage per meter gap length decreases drastically with increase in gap length and, therefore, for ultra high voltage system, costly design clearances are required. Therefore, it is important to know the behavior of external insulation with different configuration under positive switching surges as it has been found that for nearly all gap configurations which are of practical interest positive switching impulse is lower than the negative polarity switching impulse.

It has also been observed that if the humidity varies between 3 to 16 gm/m3, the breakdown voltage of positive and gaps increases approximately 1.7% for 1 gm/m3 increase in absolute humidity. For testing purposes the switching surge has been standardized with wave front time 250 μ deceit is known that the shape of the electrode has a decided effect on the flashover voltage of the insulation.

Lot of experimental work has been carried on the switching surge flash over voltage furlong gaps using rod-plane gap and it has been attempted to correlate these voltages with switching surge flash over voltage of other configuration electrodes. Several investigators have shown that if the gap length varies between 2 to 8 m, the 50% positive switching surge flash over for any configurations given by the expression

$$V_{50} = 500\ kd^{0.6}\ \text{kV}$$

where d is the gap length in meters, k is the gap factor which is a function of electrode geometry. Forrod-plane gaps K = 1.0. Thus K represents a proportionality content and is equal to 50% flash overvoltage of any gap geometry to that of a rod-plane gap for the same gap spacing

$$k = \frac{V_{50}}{V_{50}\text{rod} - \text{plane gap}}$$

i.e., The expression for V50 applies to switching impulse of constant crest time. A more general expression which applies to longer times to crest has been proposed as follows :

$$V_{50} = \frac{3450\,K}{1 + \frac{8}{d}}\ \text{kV}$$

here K and d have the same meaning as in the equation above. The gap factor K depends mainly on the gap geometry and hence on the field distribution in the gap. Shown in Fig 1.9

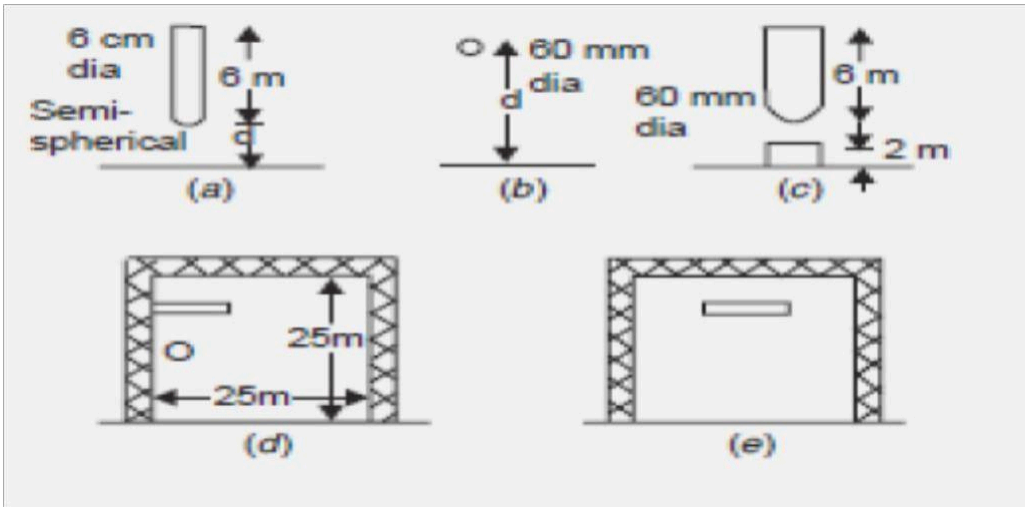

Figure: 1.9 Different gap geometries

1.3.2 Overvoltage Protection

The causes of over voltages in the system have been studied extensively in previous sections. Basically, there are two sources: (i) external over voltages due to mainly lightning, and

(ii) internal overvoltage mainly due to switching operation. The system can be protected against external over voltages using what are known as shielding methods which do not allow an arc path to form between the line conductors and ground, thereby giving inherent protection in the line design. For protection against internal voltages normally non-shielding methods are used which allow an arc path between the ground structure and the line conductor but means are provided to quench the arc. The use of ground wire is a shielding method whereas the use of spark gaps, and lightning arresters are the non-shielding methods. We will study first the non-shielding methods and then the shielding methods. However, the non shielding methods can also be used for external over voltages.

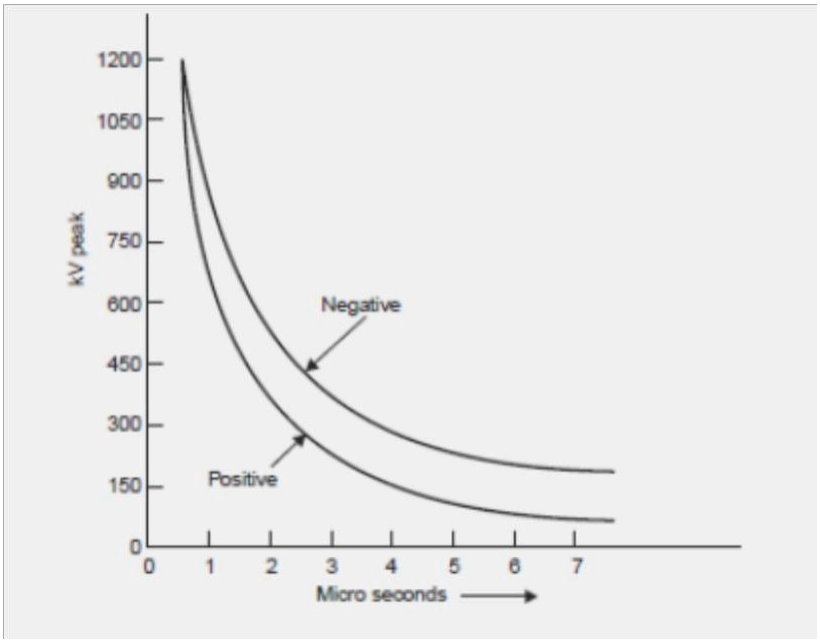

Figure: 1.10 Volt-time curves of gaps for positive and negative polarity

The non-shielding methods are based upon the principle of insulation breakdown as the Overvoltage is incident on the protective device; thereby a part of the energy content in the overvoltage is discharged to the ground through the protective device. The insulation breakdown is not only a function of voltage but it depends upon the time for which it is applied and also it depends upon the shape and size of the electrodes used.

The steeper the shape of the voltage wave, the larger will be the magnitude of voltage required for breakdown; this is because an expenditure of energy is required for the rupture of any dielectric, whether gaseous, liquid or solid, and energy involves time. The energy criterion for various insulations can be compared in terms of a common term known as Impulse Ratio which is defined as the ratio of breakdown voltage due to an impulse of specified shape to the breakdown voltage at power frequency. The impulse ratio for sphere gap is unity because this gap has a fairly uniform field and the breakdown takes place on the field ionization phenomenon mainly whereas for a needle gap it varies between 1.5 to 2.3 depending upon the frequency and

gap length. This ratio is higher than unity because of the non-uniform field between the electrodes.

The impulse ratio of a gap of given geometry and dimension is greater with solid than with air dielectric. The insulators should have a high impulse ratio for an economic design whereas the lightning arresters should have a low impulse ratio so that a surge incident on the lightning arrester may be-by passed to the ground instead of passing it on to the apparatus. The volt-time characteristics of gaps having one electrode grounded depend upon the polarity of the voltage wave. From Fig.1.10 it is seen that the volt-time characteristic for positive polarity is lower than the negative polarity, i.e. the breakdown voltage for a negative impulse is greater than for a positive because of the nearness of earthed metal or of current carrying conductors. For post insulators the negative polarity wave has a high breakdown value whereas for suspension insulators the reverse is true.

Horn Gap

The horn gap consists of two horn-shaped rods separated by a small distance. One end of this is connected to be line and the other to the earth as shown in Fig. 1.11, with or without a series resistance. The choke connected between the equipment to be protected and the horn gap serves two purposes: (i) The steepness of the wave incident on the equipment to be protected is reduced. (ii) It reflects the voltage surge back on to the horn.

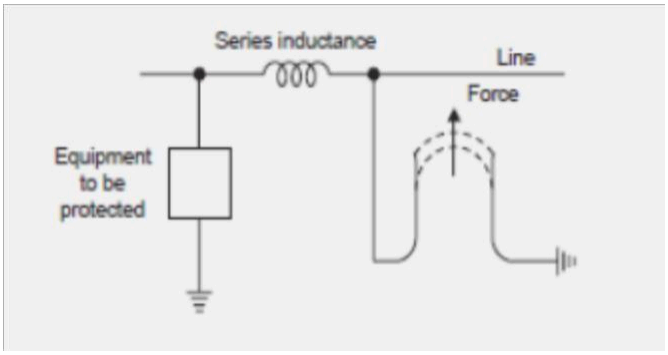

Figure: 1.11 Horn gap connected in the system for protection

Whenever a surge voltage exceeds the breakdown value of the gap a discharge takes place and the energy content in the rest part of the wave is by-passed to the ground. An arc is set up between the gap, which acts like a flexible conductor and rises upwards under the influence of the electro-magnetic forces, thus increasing the length of the arc which eventually blows out. There are two major drawbacks of the horn gap; (*i*) The time of operation of the gap is quite large as compared to the modern protective gear. (*ii*) If used on isolated neutral the horn gap may constitute a vicious kind of arcing ground. For these reasons, the horn gap has almost vanished from important power lines.

Surge Diverters

The following are the basic requirements of a surge diverter:

- It should not pass any current at normal or abnormal (normally 5% more than the normal voltage) power frequency voltage.
- It should breakdown as quickly as possible after the abnormal high frequency voltage arrives.
- It should not only protect the equipment for which it is used but should discharge the surge current without damaging itself.
- It should interrupt the power frequency follow current after the surge is discharged to ground.

There are mainly three types of surge diverters: (*i*) Rod gap, (*ii*) Protector tube or expulsion type of lightning arrester, (*iii*) Valve type of lightning arrester. **Rod gap** This type of surge diverter is perhaps the simplest, cheapest and most rugged one. Fig. 1.12 shows one such gap for a breaker bushing. This may take the form of arcing ring. Fig. 1.13 shows the breakdown characteristics (volt-time) of a rod gap.

For a given gap and wave shape of the voltage, the time for breakdown varies approximately inversely with the applied voltage.

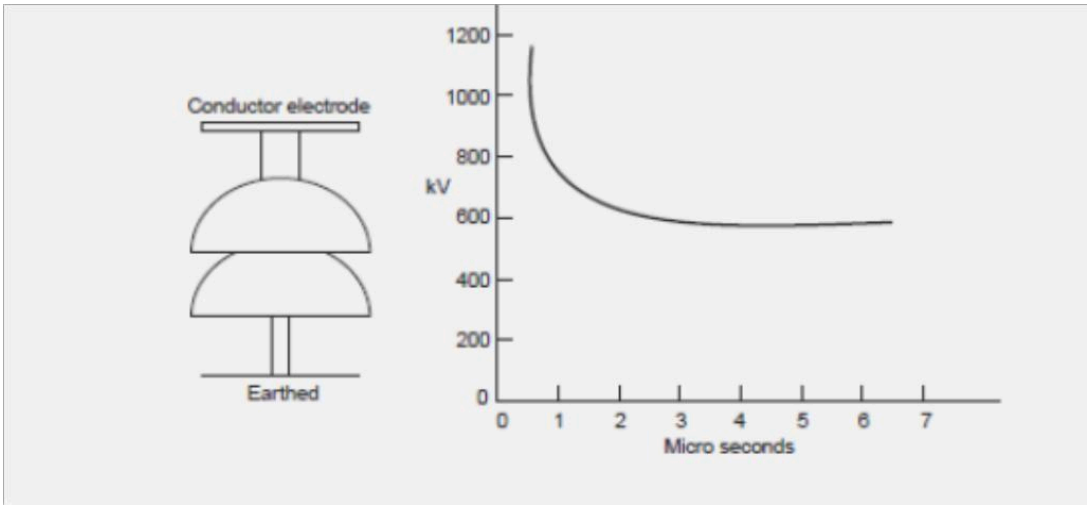

Figure: 1.12 A rod gap Figure .1.13 Volt-time characteristic of rod gap

The time to flashover for positive polarity is lower than for negative polarities. Also it is found that the flashover voltage depends to some extent on the length of the lower (grounded) rod. For low values of this length there is a reasonable difference between positive (lower value) and negative flashover voltages. Usually a length of 1.5 to 2.0 times the gap spacing is good enough to reduce this difference to a reasonable amount. The gap setting normally chosen is such that its breakdown voltage is not less than 30% below the voltage withstand level of the equipment to be protected. Even though rod gap is the cheapest form of protection, it suffers from the major disadvantage that it does not satisfy one of the basic requirements of a lightning arrester listed at no. (*iv*) *i.e.,* it does not interrupt the power frequency follow current. This means that every operation of the rod gap results in a *L-G* fault and the breakers must operate to de-energize the circuit to clear the flashover. The rod gap, therefore, is generally used as back up protection.

Expulsion type of lightning arrester

An improvement of the rod gap is the expulsion tube which consists of (i) a series gap (1) external to the tube which is good enough to withstand normal system voltage, thereby there is no possibility of corona or leakage current across the tube; (ii) a tube which has a fiber lining on the inner side which is a highly gas evolving material; (iii) a spark gap (2) in the tube; and (iv) an open vent at the lower end for the gases to be expelled (Fig. 1.14). It is desired that the breakdown voltage of a tube must be lower than that of the insulation for which it is used. When

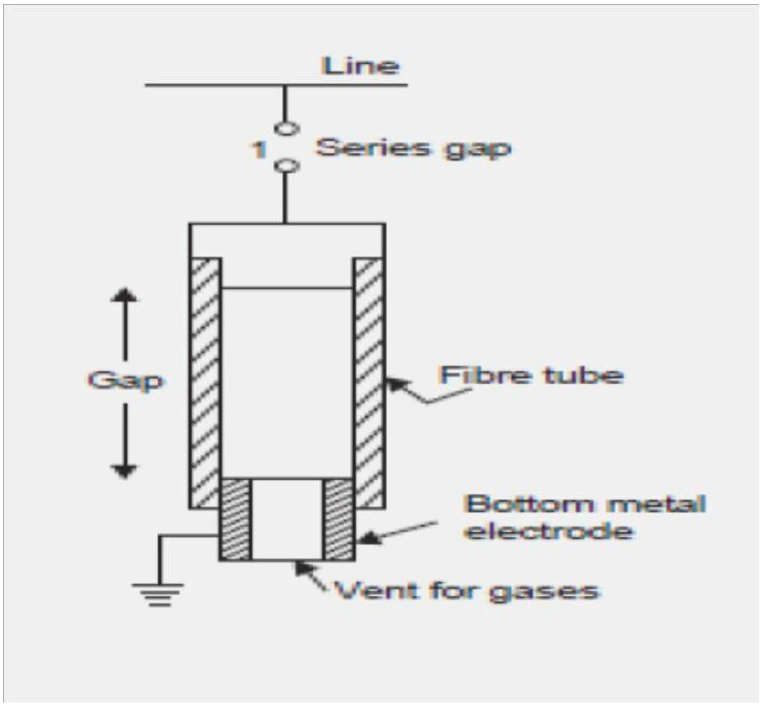

Figure: 1.14 Expulsion type

1.3.3 Surge Protection of Rotating Machine

A rotating machine is less exposed to lightning surge as compared to transformers. Because of the limited space available, the insulation on the windings of rotating machines is kept to a minimum. The main difference between the winding of rotating machine and transformer is that in case of rotating machines the turns are fewer but longer and are deeply buried in the stator slots. Surge impedance of rotating machines in approx. 1000 Ω and since the inductance and capacitance of the windings are large as compared to the overhead lines the velocity of propagation is lower than on the lines. For atypical machine it is 15 to 20 metres/ μ sec. This means that in case of surges with steep fronts, the voltage will be distributed or concentrated at the first few turns. Since the insulation is not immersed in oil, its impulse ratio is approx. unity whereas that of the transformer is more than 2.0.

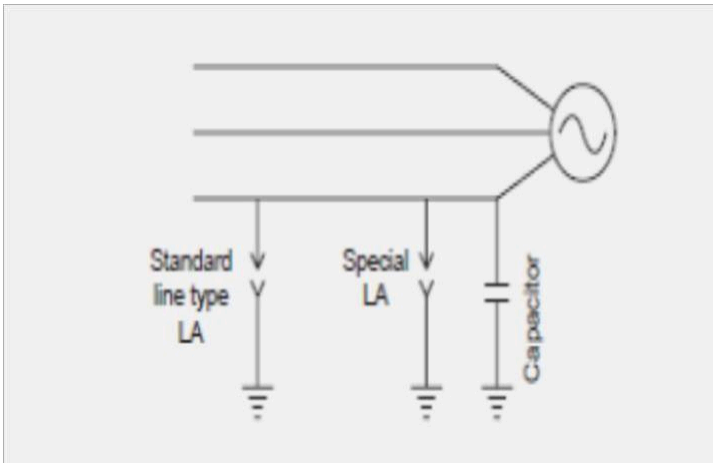

Figure: 1.15 Surge Protection of Rotating Machine

The rotating machine should be protected against major and minor insulations. By major insulation is meant the insulation between winding and the frame and minor insulation means inter-turn insulation. The major insulation is normally determined by the expected line-to-ground voltage across the terminal of the machine whereas the minor insulation is determined by the rate of rise of the voltage. Therefore, in order to protect the rotating machine against surges requires limiting the surge voltage magnitude at the machine terminals and sloping the wave front of the incoming surge. To protect the major insulation a special lightning arrester is connected at the terminal of the machine and to protect the minor insulation a condenser of suitable rating is connected at the terminals of the machine as shown in Fig. 1.15.

1.4 SYSTEM FAULTS AND OTHER ABNORMAL CONDITIONS

The shunt capacitances are also shown. Under balanced conditions and complete transposed transmission lines, the potential of the neutral is near the ground potential and the currents in various phases through the shunt capacitors are leading their corresponding voltages by 90°. They are displaced from each other by 120° so that the net sum of the three currents is zero (Fig. 1.16). Say there is line-to-ground fault on one of the three phases (say phase _c‘).The voltage across the shunt capacitor of that phase reduces to zero whereas those of the healthy phases become line-to-line voltages and now they are displaced by 60° rather than 120°. The net charging current now is three times the phase current under balanced conditions (Fig.1.16 (c)). These currents flow through the fault and the windings of the alternator. The magnitude of this current is often sufficient to sustain an arc and, therefore, we have an arcing ground. This could be due to a flashover of a support insulator. Here this flashover acts as a switch. If the arc extinguishes when the current is passing through zero value, the capacitors in phases a and b are charged to line voltages. The voltage across the line and the grounded points of the post insulator will be the super-position of the capacitor voltage and the generator voltage and this voltage may be good enough to cause flashover which is equivalent to strike in a circuit breaker. Because of the presence of the inductance of the generator winding, the capacitances will form an oscillatory circuit and these oscillations may build up to still higher voltages and the arc may reignite

causing further transient disturbances which may finally lead to complete rupture of the post insulators.

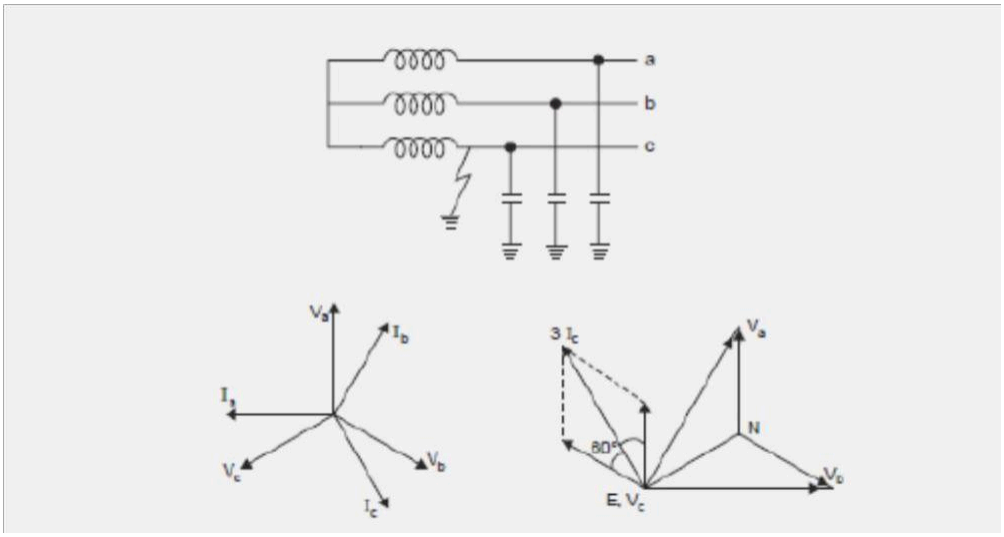

Figure: 1.16 (a) 3-phase system with isolated neutral; (b) Phasor diagram under healthy condition; (c) Phasor diagram under faulted condition.

1.5 Bewley Lattice Diagram

This is a convenient diagram devised by Bewley, which shows at a glance the position and direction of motion of every incident, reflected, and transmitted wave on the system at every instant of time. The diagram overcomes the difficulty of otherwise keeping track of the multiplicity of successive reflections at the various junctions.

Consider a transmission line having a resistance **r**, an inductance **l**, a conductance **g** and a capacitance **c**, all per unit length.

If _ is the propagation constant of the transmission line, and **E** is the magnitude of the voltage surge at the sending end, then the magnitude and phase of the wave as it reaches any section distance **x** from the sending end is **Ex** given by.

$$E = E\,.e = E\,.e = E\,e\,e\,\text{-}\,x\,\text{-}\,(\,+\,j\,)\,x\,\text{-}\,x\,\text{-}\,j\,xx\;\gamma\;\alpha\;\beta\;\alpha\;\beta$$

where

e represents the attenuation in the length of line x

e-j represents the phase angle change in the length of line x

Therefore,

attenuation constant of the line in neper/km

phase

angle of the line
constant in rad/km.

It is also common for an attenuation factor k to be defined corresponding to the length of a particular line. i.e.

k = e for a line of length l.

When a voltage surge of magnitude unity reaches a junction between two sections with surge impedances Z_1 and Z_2, then a part is transmitted and a part is reflected back. In traversing the second line, if the attenuation factor is k, then on reaching the termination at the end of the second line its amplitude would be reduced. The lattice diagram may now be constructed as follows. Set the ends of the lines at intervals equal to the time of transit of each line. If a suitable time scale is chosen, then the diagonals on the diagram show the passage of the waves.

In the Bewley lattice diagram, the following properties exist.

- All waves travel downhill, because time always increases.
-
-
- The position of any wave at any time can be deduced directly from the diagram.
  The total potential at any point, at any instant of time is the superposition of all the waves which have arrived at that point up until that instant of time, displaced in position from each other by intervals equal to the difference in their time of arrival.
- The history of the wave is easily traced. It is possible to find where it came from and just what other waves went into its composition.
- Attenuation is included, so that the wave arriving at the far end of a line corresponds to the value entering multiplied by the attenuation factor of the line.

UNIT II ELECTRICAL BREAKDOWN IN GASES, SOLIDS AND LIQUIDS

2.1 INTRODUCTION

With ever increasing demand of electrical energy, the power system is growing both in size and complexities. The generating capacities of power plants and transmission voltage are on the increase because of their inherent advantages. If the transmission voltage is doubled, the power transfer capability of the system becomes four times and the line losses are also relatively reduced. As a result, it becomes a stronger and economical system. In India, we already have 400 kV lines in operation and 800 kV lines are being planned. In big cities, the conventional transmission voltages (110 kV–220 kV etc.) are being used as distribution voltages because of increased demand.

A system (transmission, switchgear, etc.) designed for 400 kV and above using conventional insulating materials is both bulky and expensive and, therefore, newer and newer insulating materials are being investigated to bring down both the cost and space requirements. The electrically live conductors are supported on insulating materials and sufficient air clearances are provided to avoid flashover or short circuits between the live parts of the system and the grounded structures. Sometimes, a live conductor is to be immersed in an insulating liquid to bring down the size of the container and at the same time provide sufficient insulation between the live conductor and the grounded container. In electrical engineering all the three media, viz. the gas, the liquid and the solid are being used and, therefore, we study here the mechanism of breakdown of these media.

2.2 CLASSICAL GAS LAWS

In the absence of electric or magnetic fields charged particles in weakly ionized gases participate in molecular collisions. Their motions follow closely the classical kinetic gas theory.

The oldest gas law established experimentally by Boyle and Mariotte states that for a given amount of enclosed gas at a constant temperature the product of pressure (p) and volume (V) is constant or

$$pV = C = \text{const.} \qquad 2.1$$

In the same system, if the pressure is kept constant, then the volumes V and V_0 are related to their absolute temperatures T and T0 (in K) by Gay–Lussac's law:

$$\frac{V}{V_0} = \frac{T}{T_0} \qquad 2.2$$

When temperatures are expressed in degrees Celsius, eqn (2.2) becomes;

$$\frac{V}{V_0} = \frac{273+\theta}{273} \qquad 2.3$$

Equation (2.3) suggests that as we approach θ = -273°C the volume of gas shrinks to

zero. In reality, all gases liquefy before reaching this value.

According to eqn (2.2) the constant C in eqn (2.1) is related to a given temperature T0 for the volume V0:

$$pV0 = C0 \qquad 2.4$$

Substituting V0 from eqn (2.2) gives

$$pV0 = \left(\frac{C_0}{T_0}\right) T \qquad 2.5$$

The ratio C0/T0_ is called the universal gas constant and is denoted by R.

Equation (2.5) then becomes

$$pV = RT = C \qquad 2.6$$

Numerically R is equal to 8.314 joules/°Kmol. If we take n as the number of moles, i.e. the mass m of the gas divided by it's mol-mass, then for the general case eqn (2.1) takes the form

$$pV = nC = nRT, \qquad 2.7$$

Equation (2.7) then describes the state of an ideal gas, since we assumed that R is a constant independent of the nature of the gas. Equation (2.7) may be written in terms of gas density N in volume V containing N1 molecules.

Putting N = NA where NA = $6.02 * 10^{23}$ molecules/mole, NA is known as the Avogadro's number. Then eqn (2.7) becomes

$$pV = \frac{N1}{NA}RT = N1kT \text{ or } p = NkT \qquad 2.8$$

The constant k = R/NA is the universal Boltzmann's constant (=$1.3804 * 10^{23}$ joules/°K) and N is the number of molecules in the gas.

The fundamental equation for the kinetic theory of gas is derived with the following assumed conditions:

- Gas consists of molecules of the same mass which are assumed spheres.
- Molecules are in continuous random motion.
- Collisions are elastic – simple mechanical.
- Mean distance between molecules is much greater than their diameter.

2.3 CORONA DISCHARGES

In uniform field and quasi-uniform field gaps the onset of measurable ionization usually leads to complete breakdown of the gap. In non-uniform fields various manifestations of

luminous and audible discharges are observed long before the complete breakdown occurs. These discharges may be transient or steady state and are known as ‘coronas’. An excellent review of the subject may be found in a book by Loeb.

The phenomenon is of particular importance in h.v. engineering where non-uniform fields are unavoidable. It is responsible for considerable power losses from h.v. transmission lines and often leads to deterioration of insulation by the combined action of the discharge ions bombarding the surface and the action of chemical compounds that are formed by the discharge.

It may give rise to interference in communication systems. On the other hand, it has various industrial applications such as high-speed printing devices, electrostatic precipitators, paint sprayers, Geiger counters, etc. The voltage gradient at the surface of the conductor in air required to produce a visual a.c. corona in air is given approximately by the Peek’s expression.
There is a distinct difference in the visual appearance of a corona at wires under different polarity of the applied voltage. Under positive voltage, a corona appears in the form of a uniform bluish-white sheath over the entire surface of the wire.

On negative wires the corona appears as reddish glowing spots distributed along the wire. The number of spots increases with the current. Stroboscopic studies show that with alternating voltages a corona has about the same appearance as with direct voltages. Because of the distinctly different properties of coronas under the different voltage polarities it is convenient to discuss separately positive and negative coronas. In this section a brief review of the main features of corona discharges and their effect on breakdown characteristics will be included. For detailed treatment of the basic fundamentals of this subject the reader is referred to other literature sources.

2.3.1 Positive or anode coronas

The most convenient electrode configurations for the study of the physical mechanism of coronas are hemi spherically capped rod-plane or point-plane gaps. In the former arrangement, by varying the radius of the electrode tip, different degrees of field non-uniformity can be readily achieved. The point plane arrangement is particularly suitable for obtaining a high localized stress and for localization of dense space charge. In discussing the corona characteristics and their relation to the breakdown characteristics it is convenient to distinguish between the phenomena that occur under pulsed voltage of short duration (impulse corona), where no space charge is permitted to drift and accumulate, and under long lasting (d.c.) voltages (static field corona).

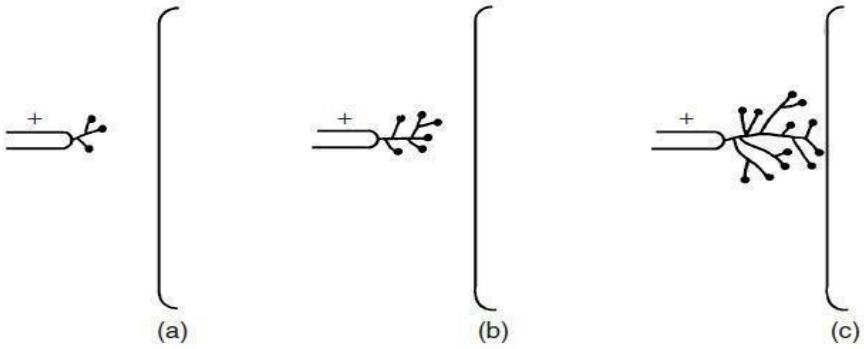

Figure: 2.1 Schematic illustration of the formation of streamers under impulse voltage-progressive growth with increasing pulse duration-positive rod-plane gap

Under impulse voltages at a level just above ionization threshold, because of the transient development of ionization, the growth of discharge is difficult to monitor precisely. However, with the use of 'Lichtenberg figures' techniques, and more recently with high-speed photographic techniques, it has been possible to achieve some understanding of the various discharge stages preceding breakdown under impulse voltages.

The observations have shown that when a positive voltage pulse is applied to a point electrode, the first detectable ionization is of a filamentary branch nature, as shown diagrammatically in Fig. 2.1(a). This discharge is called a streamer and is analogous to the case of uniform field gaps at higher pd values. As the impulse voltage level is increased, the streamers grow both in length and their number of branches as indicated in Figs 2.1(b) and (c). One of the interesting characteristics is their large number of branches which never cross each other. The velocity of the streamers decreases rapidly as they penetrate the low field region.

2.3.2 Negative or cathode corona

With a negative polarity point-plane gap under static conditions above the onset voltage the current flows in very regular pulses as shown in Fig. 2.2 (b), which indicates the nature of a single pulse and the regularity with which the pulses are repeated. The pulses were studied in detail by Trichel and are named after their discoverer as 'Trichel pulses'.

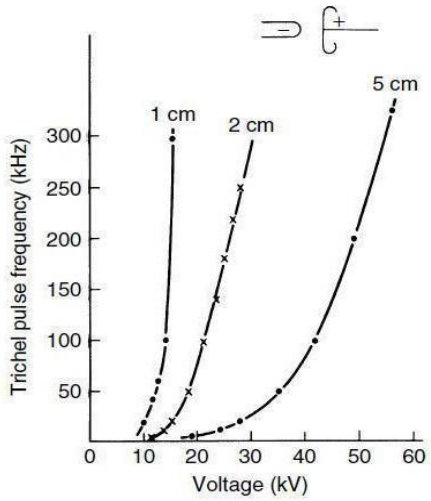

Figure: 2.2 Trichel pulse frequency–voltage relationship for different gap lengths in air (r = 0.75mm)

The onset voltage is practically independent of the gap length and in value is close to the onset of streamers under positive voltage for the same arrangement.

The pulse frequency increases with the voltage and depends upon the radius of the cathode, the gap length and the pressure. The relationship between the pulse frequency and the gap voltage for different gap lengths and a cathode point of 0.75mm radius in atmospheric air is shown in Fig. 2.2. A decrease in pressure decreases the frequency of the Trichel pulses.

2.4 IONIZATION AND DECAY PROCESSES

At normal temperature and pressure gases are excellent insulators. The conduction in air at low field is in the region $10^{-16} - 10^{-17}$ A/cm2. These current results from cosmic radiations and radioactive substances present in earth and the atmosphere. At higher fields charged particles may gain sufficient energy between collisions to cause ionization on impact with neutral molecules.

It was shown in the previous section that electrons on average lose little energy in elastic collisions and readily build up their kinetic energy which may be supplied by an external source, e.g. an applied field. On the other hand, during inelastic collisions a large fraction of their kinetic energy is transferred into potential energy, causing, for example, ionization of the struck molecule. Ionization by electron impact is for higher field strength the most important process leading to breakdown of gases. The effectiveness of ionization by electron impact depends upon the energy that an electron can gain along the mean free path in the direction of the field.

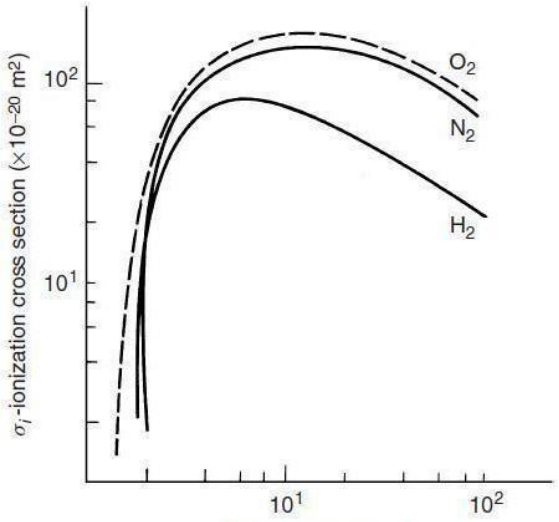

Figure: 2.3 Variation 2 with electron energy

This simple model is not applicable for quantitative calculations, because ionization by collision, as are all other processes in gas discharges, is a probability phenomenon, and is generally expressed in terms of cross-section for ionization defined as the product Piσ = σi where Pi is the probability of ionization on impact and σ is the molecular or atomic cross-sectional area for interception defined earlier. The cross-section &i is measured using monoenergetic electron beams of different energy. The variation of ionization cross-sections for H2, O2, and N2 with electron energy.

It is seen that the cross-section is strongly dependent upon the electron energy. At energies below ionization potential the collision may lead to excitation of the struck atom or molecule which on collision with another slow moving electron may become ionized. This process becomes significant only when densities of electrons are high. Very fast moving electrons may pass near an atom without ejecting an electron from it. For every gas there exists an optimum electron energy range which gives a maximum ionization probability.

2.5 TOWNSEND'S CRITERION

2.5.1 Townsend first ionization coefficient

In the absence of electric field the rate of electron and positive ion generation in an ordinary gas is counterbalanced by decay processes and a state of equilibrium exists. This state of equilibrium will be upset upon the application of a sufficiently high field. The variation of the gas current measured between two parallel plate electrodes was first studied as a function of the applied voltage by Townsend.

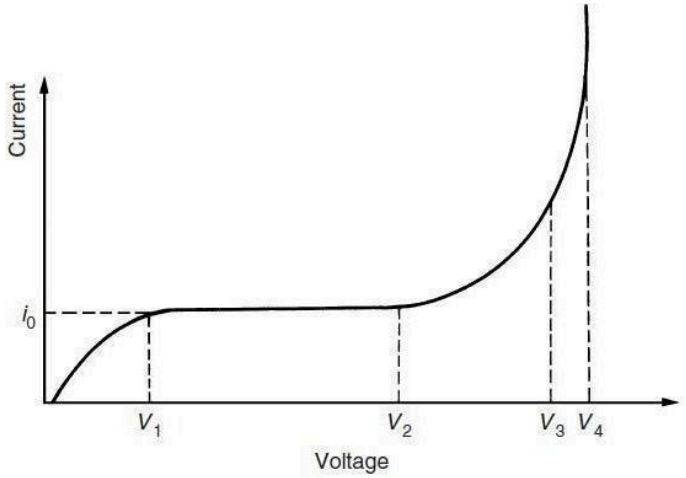

Figure: 2.4 Current–voltage relationship in prespark region

Townsend found that the current at first increased proportionately with the applied voltage and then remained nearly constant at a value i0 which corresponded to the background current (saturation current), or if the cathode was irradiated with a u.v. light, i0 gave the emitted photocurrent. At still higher voltage the current increased above the value i0 at an exponential rate. The general pattern of the current–voltage relationship is shown schematically in Fig. 2.4.

The increase in current beyond V2 Townsend ascribed to ionization of the gas by electron collision. As the field increases, electrons leaving the cathode are accelerated more and more between collisions until they gain enough energy to cause ionization on collision with gas molecules or atoms.

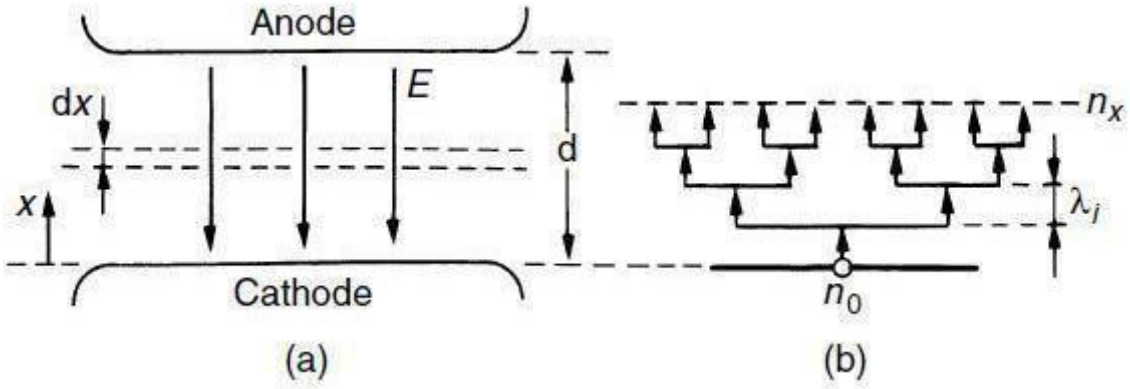

Figure: 2.5 Schematic representation of electron multiplication (a) gap arrangement,(b) Electron avalanche

To explain this current increase Townsend introduced a quantity α, known as Townsend's first ionization coefficient, defined as the number of electrons produced by an electron per unit length of path in the direction of the field. Thus if we assume that n is the number of electrons at a distance x from the cathode in field direction (Fig. 2.5) the increase in electrons dn in additional

distance dx is given by

$$dn = \alpha n dx. \qquad 2.9$$

Integration over the distance (d)

$$n = n_o e^{\alpha d} \qquad 2.10$$

where n_0 is the number of primary electrons generated at the cathode. In terms of current, with I_0 the current leaving the cathode, eqn (2.10) becomes

$$I = I_0 e^{\alpha d} \qquad 2.11$$

The term $e^{\alpha d}$ is called the electron avalanche and it represents the number of electrons

produced by one electron in travelling from cathode to anode. The electron multiplication within the avalanche is shown diagrammatically in Fig. 2.3.

$$\frac{\alpha}{p} = \frac{\sigma_i}{KT} e^{-(\sigma i/kT)[Vi/(E/p)]} = A(T)\, e^{-[B(T)/(E/p)]} \qquad 2.12$$

Where

$$A_{(T)} = \frac{\sigma_i}{kT} B_{(T)} = \frac{V_i \sigma_i}{kT} \qquad 2.13$$

Where A & B are the Ionization Constants.

It cannot be expected that the real dependence of α/p upon E/p agrees with measured values within the whole range of E/p, because phenomena which have not been taken into account are influencing the ionization rate. However, even with constant values of A and B, eqn (5.47) determines the ionization process within certain ranges of E/p. Therefore, for various gases the 'constants' A and B have been determined experimentally and can be found in the literature.

The constants A and B in eqn (2.13), as derived from kinetic theory, rarely agree with the experimentally determined values. The reasons for this disagreement lies in the assumptions made in our derivations. We assumed that every electron whose energy exceeds eVi will automatically lead to ionization. In reality the probability of ionization for electrons with energy just above the ionization threshold is small and it rises slowly to a maximum value of about 0.5 at 4 to 6 times the ionization energy. Beyond that it decreases. We have also assumed that the mean free path is independent of electron energy which is not necessarily true. A rigorous treatment would require taking account of the dependence of the ionization cross-section upon

the electron energy.

2.5.2 Townsend Second Ionisation Coefficient

From the equation

$$I = I_0 e^{\alpha x}$$

We have, taking log on both the sides.

$$\ln I = \ln I_0 + \alpha x \qquad 2.14$$

This is a straight line equation with slope α and intercept ln I_0 as shown in Fig. 2.5 if for a given pressure p, E is kept constant.

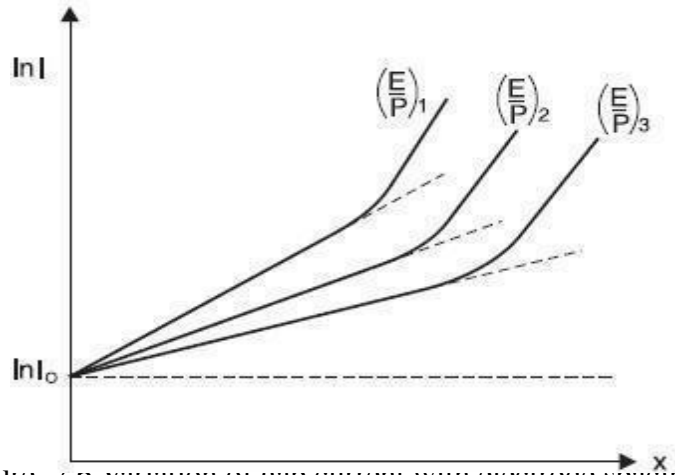

Figure: 2.6 Variation of gap current with electrode spacing in uniform E

Townsend in his earlier investigations had observed that the current in parallel plate gap increased more rapidly with increase in voltage as compared to the one given by the above equation. To explain this departure from linearity, Townsend suggested that a second mechanism must be affecting the current. He postulated that the additional current must be due to the presence of positive ions and the photons. The positive ions will liberate electrons by collision with gas molecules and by bombardment against the cathode. Similarly, the photons will also release electrons after collision with gas molecules and from the cathode after photon impact.

Let us consider the phenomenon of self-sustained discharge where the electrons are released from the cathode by positive ion bombardment. Let n_0 be the number of electrons released from the cathode by ultraviolet radiation, n_+ the number of electrons released from the cathode due to positive ion bombardment and n the number of electrons reaching the anode. Let ν, known as Townsend second ionization co-efficient be defined as the number of electrons released from cathode per incident positive ion, Then

$$n = (n_0 + n_+)e^{\alpha d} \qquad 2.15$$

Now total number of electrons released from the cathode is $(n_0 + n_+)$ and those reaching the anode are n, therefore, the number of electrons released from the gas = $n - (n_0 + n_+)$, and

corresponding to each electron released from the gas there will be one positive ion and assuming each positive ion releases ν effective electrons from the cathode then

$$n+ = \nu n - \nu n0 - \nu n^{+}$$

Substituting n+ for n, we have

$$n = \frac{n_0 e^{\alpha d}}{1+\nu n(1-e^{\alpha d})} = \frac{n_0 e^{\alpha d}}{1-\nu(e^{\alpha d}-1)}$$

In practice positive ions, photons and metastable, all the three may participate in the process of ionization. It depends upon the experimental conditions. There may be more than one mechanism producing secondary ionization in the discharge gap and, therefore, it is customary to express the net secondary ionization effect by a single coefficient ν and represent the current by the above equation keeping in mind that ν may represent one or more of the several possible mechanism.

$$\nu = \nu 1 + \nu 2 + \nu 3 + ...$$

It is to be noted that the value of ν depends upon the work function of the material. If the work function of the cathode surface is low, under the same experimental conditions will produce more emission. Also, the value of ν is relatively small at low value of E/p and will increase with increase in E/p.

This is because at higher values of E/p, there will be more number of positive ions and photons of sufficiently large energy to cause ionization upon impact on the cathode surface. It is to be noted that the influence of ν on breakdown mechanism is restricted to Townsend breakdown mechanism i.e., to low-pressure breakdown only.

2.5.3 Townsend Breakdown Mechanism

When voltage between the anode and cathode is increased, the current at the anode is given by

$$I = \frac{I_0 e^{\alpha d}}{1-\nu(e^{\alpha d}-1)}$$

The current becomes infinite if

$$1 - \nu(e^{\alpha d} - 1) = 0$$

or $$\nu(e^{\alpha d} - 1) = 1$$

or $$\nu e^{\alpha d} \approx 1$$

Since normally $e^{\alpha d} >> 1$

The current in the anode equals the current in the external cirrcuit. Theoretically the current becomes infinitely large under the above mentioned condition but practically it is limited by the resistance of the external circuit and partially by the voltage drop in the arc.

The condition $\nu e^{\alpha d} = 1$ defines the condition for beginning of spark and is known as the Townsend criterion for spark formation or Townsend breakdown criterion. Using the above equations, the following three conditions are possible.

- $\nu e^{\alpha d} = 1$

  The number of ion pairs produced in the gap by the passage of arc electron avalanche is sufficiently large and the resulting positive ions on bombarding the cathode are able to relase one secondary electron and so cause a repetition of the avalanche process. The discharge is then said to be self-sustained as the discharge will sustain itself even if the source producing I is removed. Therefore, the condition $\nu e^{\alpha d} = 1$ defines the threshold sparking condition.

- $\nu e^{\alpha d} > 1$

  Here ionization produced by successive avalanche is cumulative. The spark discharge grows more rapidly the more αd exceeds unity.

- $\nu e^{\alpha d} < 1$

  Here the current I is not self-sustained ceases i.e., on removal of the source the current I_0 to flow.

2.6 PASCHEN'S LAW

The Townsend's Criterion

$$\nu(e^{\alpha d} - 1) = 1$$

enables the evaluation of breakdown voltage of the gap by the use of appropriate values of α/p and ν corresponding to the values E/p when the current is too low to damage the cathode and also the space charge distortions are minimum. A close agreement between the calculated and experimentally determined values is obtained when the gaps are short or long and the pressure is relatively low. An expression for the breakdown voltage for uniform field gaps as a function of gap length and gas pressure can be derived from the threshold equation by expressing the ionization coefficient α/p as a function of field strength E and gas pressure p i.e.,

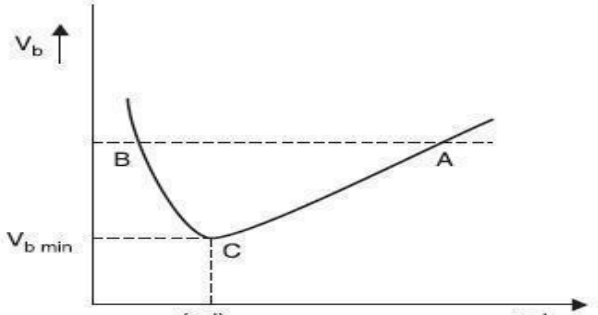

Figure: 2.7 Paschen's law curve

Substituting this, we have

$$e_{f(E/p)\,pd} = \frac{1}{v} + 1$$

Taking ln both the sides, we have

$$f\left(\frac{E}{p}\right)pd = ln\left[\frac{1}{v} + 1\right] = K \text{ say}$$

For uniform field $E = \frac{v_b}{d}$;

$$f\left(\frac{E}{p}\right)pd = K$$

or $$f\left(\frac{E}{p}\right) = \frac{K}{pd}$$

or $$Vb = F\,(p.d)$$

This shows that the breakdown voltage of a uniform field gap is a unique function of the product of gas pressure and the gap length for a particular gas and electrode material. This relation is known as Paschen's law. This relation does not mean that the breakdown voltage is directly proportional to product pd even though it is found that for some region of the product pd the relation is linear i.e., the breakdown voltage varies linearly with the product pd.

2.7 STREAMER OR KANAL MECHANISM OF SPARK

We know that the charges in between the electrodes separated by a distance d increase by a factor $e^{\alpha d}$ when field between electrodes is uniform. This is valid only if we assume that the field $E0 = V/d$ is not affected by the space charges of electrons and positive ions. Raether has observed that if the charge concentration is higher than 10^6 but lower than 10^8 the growth of an avalanche is weakened i.e., $dn/dx < e^{\alpha d}$.

Whenever the concentration exceeds 10^8, the avalanche current is followed by steep rise in current and breakdown of the gap takes place. The weakening of the avalanche at lower concentration and rapid growth of avalanche at higher concentration have been attributed to the modification of the electric field E0 due to the space charge field. Fig. 2.6 shows the electric field around an avalanche as it progresses along the gap and the resultant field i.e., the superposition of the space charge field and the original field E0. Since the electrons have higher mobility, the space charge at the head of the avalanche is considered to be negative and is assumed to be concentrated within a spherical volume. It can be seen from Fig. 2.6 that the filed at the head of the avalanche is strengthened.

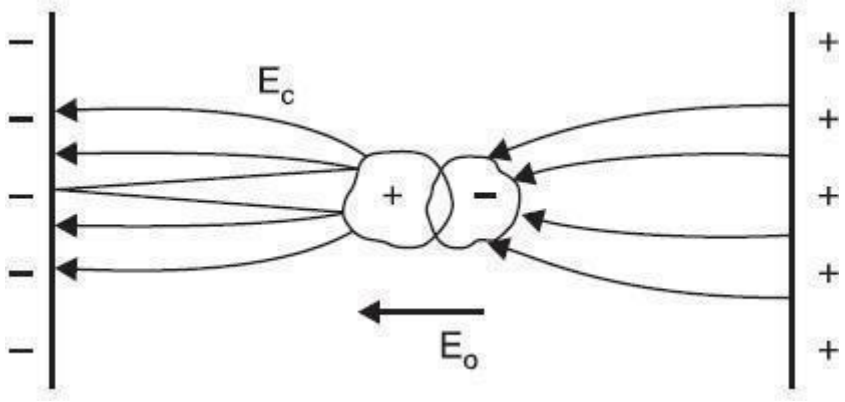

Figure: 2.8 Field redistribution due to space charge

The field between the two assumed charge centres i.e., the electrons and positive ions is decreased as the field due to the charge centres opposes the main field E0 and again the field between the positive space charge centre and the cathode is strengthened as the space charge field aids the main field E0 in this region. It has been observed that if the charge carrier number exceeds 10^6, the field distortion becomes noticeable. If the distortion of field is of 1%, it would lead to a doubling of the avalanche but as the field distortion is only near the head of the avalanche, it does not have significance on the discharge phenomenon. However, if the charge carrier exceeds 10^8, the space charge field becomes almost of the same magnitude as the main field E0 and hence it may lead to initiation of a streamer. The space charge field, therefore, plays a very important role in the mechanism of electric discharge in a non-uniform gap.

Townsend suggested that the electric spark discharge is due to the ionization of gas molecule by the electron impact and release of electrons from cathode due to positive ion bombardment at the cathode. According to this theory, the formative time lag of the spark should be at best equal to the electron transit time tr. At pressures around atmospheric and above p.d. > 10^3 Torr-cm, the experimentally determined time lags have been found to be much shorter than tr. Study of the photographs of the avalanche development has also shown that under certain conditions, the space charge developed in an avalanche is capable of transforming the avalanche into channels of ionization known as streamers that lead to rapid development of breakdown. It has also been observed through measurement that the transformation from avalanche to streamer generally takes place when the charge within the avalanche head reaches a critical value of

$$n_0 e^{\alpha x} \approx 10^8 \text{ or } \alpha X_c \approx 18 \text{ to } 20$$

where Xc is the length of the avalanche parth in field direction when it reaches the critical size. If the gap length d < Xc, the initiation of streamer is unlikely.

The short-time lags associated with the discharge development led Raether and independently Meek and Meek and Loeb to the advancement of the theory of streamer of Kanal mechanism for spark formation, in which the secondary mechanism results from photo ionization of gas molecules and is independent of the electrodes.

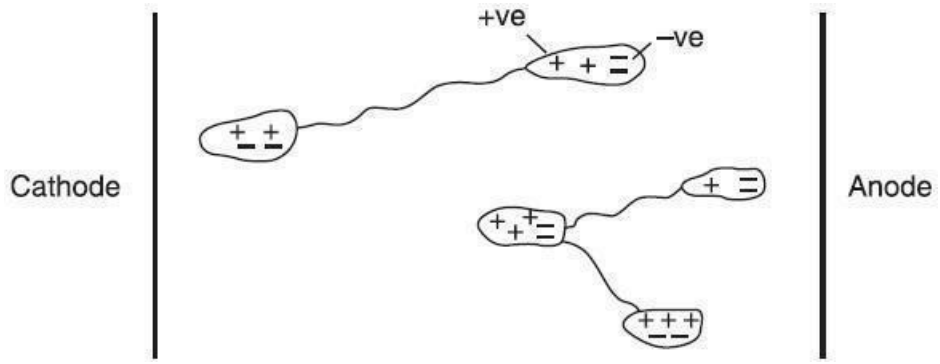

Figure: 2.9 Secondary avalanche formations by photoelectrons

Raether and Meek have proposed that when the avalanche in the gap reaches a certain critical size the combined space charge field and externally applied field E0 lead to intense ionization and excitation of the gas particles in front of the avalanche head. There is recombination of electrons and positive ion resulting in generation of photons and these photons in turn generate secondary electrons by the photo ionization process. These electrons under the influence of the electric field develop into secondary avalanches as shown in Fig. 2.9. Since photons travel with velocity of light, the process leads to a rapid development of conduction channel across the gap.

Raether after thorough experimental investigation developed an empirical relation for the streamer spark criterion of the form

$$\alpha xc = 17.7 + \ln xc + \ln \frac{E_r}{E_0}$$

where Er is the radial field due to space charge and E0 is the externally applied field. Now for transformation of avalanche into a streamer Er ≈ E Therefore,

$$\alpha xc = 17.7 + \ln xc$$

For a uniform field gap, breakdown voltage through streamer mechanism is obtained on the assumption that the transition from avalanche to streamer occurs when the avalanche has just crossed the gap. The equation above, therefore, becomes

$$\alpha d = 17.7 + \ln d$$

When the critical length Xc ≥ d minimum breakdown by streamer mechanism is brought about. The condition Xc = d gives the smallest value of α to produce streamer breakdown.

Meek suggested that the transition from avalanche to streamer takes place when the radial field about the positive space charge in an electron avalanche attains a value of the order of the externally applied field. He showed that the value of the radial field can be obtained by using the expression.

$$Er = 5.3 \times 10^{-7} \frac{\alpha e^{\alpha x}}{(x/p)^{1/2}} \text{ volts/cm}$$

where x is the distance in cm which the avalanche has progressed, p the gas pressure in Torr and α the Townsend coefficient of ionization by electrons corresponding to the applied field E. The minimum breakdown voltage is assumed to correspond to the condition when the avalanche has crossed the gap of length d and the space charge field Er approaches the externally applied field i.e., at x = d, Er = E. Substituting these values in the above equation, we have

$$Er = 5.3 \times 10^{-7} \frac{\alpha e^{\alpha d}}{(d/p)^{1/2}}$$

Taking ln on both the sides, we have

$$\ln E = -14.5 + \ln \alpha - \frac{1}{2} \ln \frac{d}{p} + \alpha d$$

$$\ln E - \ln p = -14.5 + \ln \alpha - \ln p - \frac{1}{2} \ln \frac{d}{p} + \alpha d \ln \frac{E}{p} = -14.5 + ln\frac{\alpha}{p} - \frac{1}{2} ln\frac{d}{p} + \alpha d$$

The experimentally determined values of α/p and the corresponding E/p are used to solve the above equation using trial and error method. Values of α/p corresponding to E/p at a given pressure are chosen until the equation is satisfied.

2.8 BREAKDOWN IN NON-UNIFORM FIELDS

In non-uniform fields, e.g. in point-plane, sphere-plane gaps or coaxial cylinders, the field strength and hence the effective ionization coefficient $\overline{\alpha}$ vary across the gap. The electron multiplication is governed by the integral of $\overline{\alpha}$ over the path ($\int \overline{\alpha}$ dx). At low pressures the Townsend criterion for spark takes the form

$$\gamma \left[exp\left(\int_0^d \overline{\alpha} dx \right) - 1 \right] = 1$$

where d is the gap length. The integration must be taken along the line of the highest field strength.

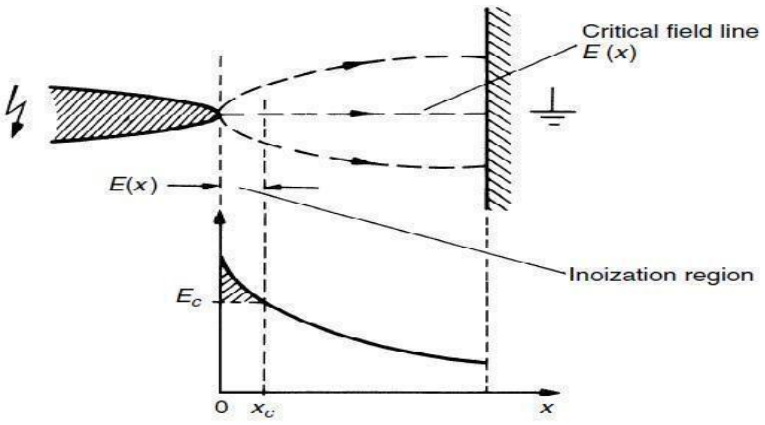

Figure: 2.9 Electric field distribution in a non-uniform field gap

The expression is valid also for higher pressures if the field is only slightly non-uniform. In strongly divergent fields there will be at first a region of high values of E/p over which α/p > 0. When the field falls below a given strength Ec the integral $\int \bar{\alpha}$ dx ceases to exist.

Townsend mechanism then loses its validity when the criterion relies solely on the γ effect, especially when the field strength at the cathode is low.

In reality breakdown (or inception of discharge) is still possible if one takes into account photo ionization processes. The criterion condition for breakdown (or inception of discharge) for the general case may be represented to take into account the non-uniform distribution of $\bar{\alpha}$ or

$$exp \int_0^{x_{c<d}} \bar{\alpha} dx = N_{cr}$$

where Ncr is the critical electron concentration in an avalanche giving rise to initiation of 10^8 a streamer (it was shown to be approx. 10), xc is the path of avalanche to reach this size and d the gap length.

$$\int_0^{x_c<d} \bar{\alpha} dx = ln\, N_{cr} \approx 18 - 20 \qquad 2.15$$

Figure 2.9 illustrates the case of a strongly divergent field in a positive point plane gap. Equation (2.15) is applicable to the calculation of breakdown or discharge inception voltage, depending on whether direct breakdown occurs or only corona.

2.9 BREAKDOWN IN LIQUID DIELECTRICS

Liquid dielectrics are used for filling transformers, circuit breakers and as impregnates in high voltage cables and capacitors. For transformer, the liquid dielectric is used both for providing insulation between the live parts of the transformer and the grounded parts besides carrying out the heat from the transformer to the atmosphere thus providing cooling effect. For circuit breaker, again besides providing insulation between the live parts and the grounded parts, the liquid dielectric is used to quench the arc developed between the breaker contacts. The liquid dielectrics mostly used are petroleum oils. Other oils used are synthetic hydrocarbons and halogenated hydrocarbons and for very high temperature applications sillicone oils and fluorinated hyrocarbons are also used.

The three most important properties of liquid dielectric are (i) The dielectric strength (ii) The dielectric constant and (iii) The electrical conductivity. Other important properties are viscosity, thermal stability, specific gravity, flash point etc. The most important factors which affect the dielectric strength of oil are the, presence of fine water droplets and the fibrous impurities. The presence of even 0.01% water in oil brings down the dielectric strength to 20% of the dry oil value and the presence of fibrous impurities brings down the dielectric strength much sharply. Therefore, whenever these oils are used for providing electrical insulation, these should be free from moisture, products of oxidation and other contaminants.

Table :2.1. Dielectric properties of some liquids

S.No.	Property	Transformer Oil	Capacitor Oil	Cable Oil	Silicone Oil
1.	Relative permittivity 50 Hz	2.2 – 2.3	2.1	2.3 – 2.6	2.7 – 3.0
2.	Breakdown strength at 20°C 2.5 mm 1 min	12 kV/mm	18 kV/mm	25 kV/mm	35 kV/mm
3.	(*a*) Tan δ 50 Hz	10^{-3}	2.5×10^{-4}	2×10^{-3}	10^{-3}
	(*b*) 1 kHz	5×10^{-4}	10^{-4}	10^{-4}	10^{-4}
4.	Resistivity ohm-cm	$10^{12} – 10^{13}$	$10^{13} – 10^{14}$	$10^{12} – 10^{13}$	2.5×10^{14}
5.	Maximum permissible water content (ppm)	50	50	50	< 40
6.	Acid value mg/gm of KOH	NIL	NIL	NIL	NIL
7.	Sponification mg of KOH/gm of oil	0.01	0.01	0.01	< 0.01
8.	Specific gravity at 20°C	0.89	0.89	0.93	1.0–1.1

The main consideration in the selection of a liquid dielectric is its chemical stability. The other considerations are the cost, the saving in space, suptibility to environmental influences etc. The use of liquid dielectric has brought down the size of equipment tremendously. In fact, it is practically impossible to construct a 765 kV transformer with air as the insulating medium. Table 2.1. Shows the properties of some dielectrics commonly used in electrical equipments.

Liquids which are chemically pure, structurally simple and do not contain any impurity even in traces of 1 in 109, are known as pure liquids. In contrast, commercial liquids used as insulating liquids are chemically impure and contain mixtures of complex organic molecules. In fact their behaviour is quite erratic. No two samples of oil taken out from the same container will behave identically. The theory of liquid insulation breakdown is less understood as of today as compared to the gas or even solids. Many aspects of liquid breakdown have been investigated over the last decades but no general theory has been evolved so far to explain the breakdown in liquids. Investigations carried out so far, however, can be classified into two schools of thought.

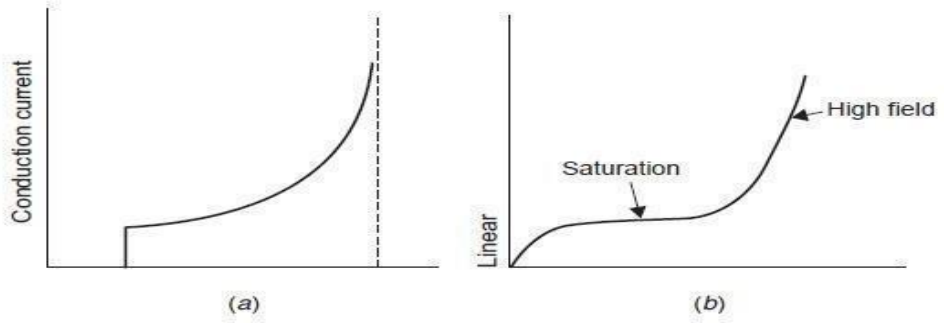

Figure: 2.10 Variation of current as a function of electric field
(a) High fields (b) Low fields

The first one tries to explain the breakdown in liquids on a model which is an extension of gaseous breakdown, based on the avalanche ionization of the atoms caused by electon collisiron in the applied field. The electrons are assumed to be ejected from the cathode into the liquid by either a field emission or by the field enhanced thermionic effect (Shottky's effect).
This breakdown mechanism explains breakdown only of highly pure liquid and does not apply to explain the breakdown mechanism in commercially available liquids.

It has been observed that conduction in pure liquids at low electric field (1 kV/cm) is largely ionic due to dissociation of impurities and increases linearily with the field strength. At moderately high fields the conduction saturates but at high field (electric), 100 kV/cm the conduction increases more rapidly and thus breakdown takes place. Fig. 2.10 (a) shows the variation of current as a function of electric field for hexane. This is the condition nearer to breakdown. However, if the figure is redrawn starting with low fields, a current-electric field characteristic as shown in Fig. 2.10 (b) will be obtained.

The second school of thought recognises that the presence of foreign particles in liquid insulations has a marked effect on the dielectric strength of liquid dielectrics. It has been suggested that the suspended particles are polarizable and are of higher permittivity than the liquid. These particles experience an electrical force directed towards the place of maximum stress. With uniform field electrodes the movement of particles is presumed to be initiated by surface irregularities on the electrodes, which give rise to local field gradients. The particles thus get accumulated and tend to form a bridge across the gap which leads finally to initiation of breakdown. The impurities could also be in the form of gaseous bubbles which obviously have lower dielectric strength than the liquid itself and hence on breakdown of bubble the total breakdown of liquid may be triggered.

2.9.1 Electronic Breakdown

Once an electron is injected into the liquid, it gains energy from the electric field applied between the electrodes. It is presumed that some electrons will gain more energy due to field than they would lose during collision. These electrons are accelerated under the electric field and would gain sufficient energy to knock out an electron and thus initiate the process of avalanche. The threshold condition for the beginning of avalanche is achieved when the energy gained by the electron equals the energy lost during ionization (electron emission) and is given by

$$e \lambda E = Chv$$

where λ is the mean free path, hv is the energy of ionization and C is a constant.
Table 2.2 gives typical values of dielectric strengths of some of the highly purified liquids.

The electronic theory whereas predicts the relative values of dielectric strength satisfactorily, the formative time lags observed are much longer as compared to the ones predicted by the electronic theory.

Table: 2.2. Dielectric strengths of pure liquids

Liquid	*Strength (MV/cm)*
Benzene	1.1
Goodoil	1.0–4.0
Hexane	1.1–1.3
Nitrogen	1.6–1.88
Oxygen	2.4
Silicon	1.0–1.2

2.10 BREAKDOWN IN SOLID DIELECTRICS

Solid insulating materials are used almost in all electrical equipments, be it an electric heater or a 500 MW generator or a circuit breaker, solid insulation forms an integral part of all electrical equipments especially when the operating voltages are high. The solid insulation not only provides insulation to the live parts of the equipment from the grounded structures, it sometimes provides mechanical support to the equipment. In general, of course, a suitable combination of solid, liquid and gaseous insulations is used.

The processes responsible for the breakdown of gaseous dielectrics are governed by the rapid growth of current due to emission of electrons from the cathode, ionization of the gas particles and fast development of avalanche process. When breakdown occurs the gases regain their dielectric strength very fast, the liquids regain partially and solid dielectrics lose their strength completely.

The breakdown of solid dielectrics not only depends upon the magnitude of voltage applied but also it is a function of time for which the voltage is applied. Roughly speaking, the product of the breakdown voltage and the log of the time required for breakdown is almost a constant i.e,

$$Vb = 1n\ tb = \text{constant}$$

The characteristics is shown in Fig. 2.11

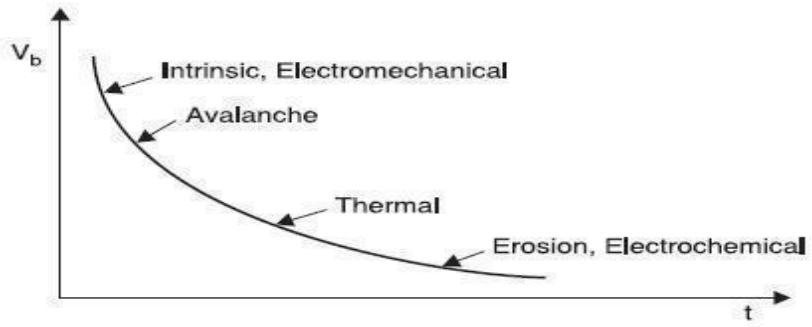

Figure: 2.11 Variation of Vb with time of application

The dielectric strength of solid materials is affected by many factors viz. ambient temperature, humidity, duration of test, impurities or structural defects whether a.c., d.c. or impulse voltages are being used, pressure applied to these electrodes etc. The mechanism of breakdown in solids is again less understood. However, as is said earlier the time of application plays an important role in breakdown process, for discussion purposes, it is convenient to divide the time scale of voltage application into regions in which different mechanisms operate. The various mechanisms are:

- Intrinisic Breakdown
- Electromechanical Breakdown
- Breakdown Due to Treeing and Tracking
- Thermal Breakdown
- Electrochemical Breakdown

2.10.1 Intrinsic breakdown in solids

If the dielectric material is pure and homogeneous, the temperature and environmental conditions suitably controlled and if the voltage is applied for a very short time of the order of 10–8 second, the dielectric strength of the specimen increases rapidly to an upper limit known as intrinsic dielectric strength. The intrinsic strength, therefore, depends mainly upon the structural design of the material i.e., the material itself and is affected by the ambient temperature as the structure itself might change slightly by temperature condition.

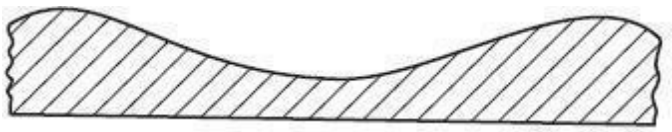

Figure: 2.12 Specimen designed for intrinsic breakdown

In order to obtain the intrinsic dielectric strength of a material, the samples are so prepared that there is high stress in the centre of the specimen and much low stress at the corners as shown in Fig. 2.12. The intrinsic breakdown is obtained in times of the order of 10^{-8} sec. and, therefore, has been considered to be electronic in nature.

The stresses required are of the order of one million volt/cm. The intrinsic strength is generally assumed to have been reached when electrons in the valance band gain sufficient energy from the electric field to cross the forbidden energy band to the conduction band. In pure and homogenous materials, the valence and the conduction bands are separated by a large energy gap at room temperature, no electron can jump from valance band to the conduction band.

The conductivity of pure dielectrics at room temperature is, therefore, zero. However, in practice, no insulating material is pure and, therefore, has some impurities and/or imperfections in their structural designs. The impurity atoms may act as traps for free electrons in energy levels that lie just below the conduction band is small. An amorphous crystal will, therefore, always have some free electrons in the conduction band. At room temperature some of the trapped electrons will be excited thermally into the conduction band as the energy gap between the trapping band and the conduction band is small.

An amorphous crystal will, therefore, always have some free electrons in the conduction band. As an electric field is applied, the electrons gain energy and due to collisions between them the energy is shared by all electrons. In an amorphous dielectric the energy gained by electrons from the electric field is much more than they can transfer it to the lattice. Therefore, the temperature of electrons will exceed the lattice temperature and this will result into increase in the number of trapped electrons reaching the conduction band and finally leading to complete breakdown. When an electrode embedded in a solid specimen is subjected to a uniform electric field, breakdown may occur.

An electron entering the conduction band of the dielectric at the cathode will move towards the anode under the effect of the electric field. During its movement, it gains energy and on collision it loses a part of the energy. If the mean free path is long, the energy gained due to motion is more than lost during collision. The process continues and finally may lead to formation of an electron avalanche similar to gases and will lead finally to breakdown if the avalanche exceeds a certain critical size.

2.11 ELECTROMECHANICAL BREAKDOWN

When a dielectric material is subjected to an electric field, charges of opposite nature are induced on the two opposite surfaces of the material and hence a force of attraction is developed and the specimen is subjected to electrostatic compressive forces and when these forces exceed the mechanical withstands strength of the material, the material collapses. If the initial thickness of the material is $d0$ and is compressed to a thickness d under the applied voltage V then the compressive stress developed due to electric field is

$$F = \frac{1}{2}\varepsilon_0\varepsilon_r\frac{V^2}{d^2}$$

where εr is the relative permittivity of the specimen. If γ is the Young's modulus, the mechanical compressive strength is

$$\gamma \ln \frac{d_0}{d}$$

Equating the two under equilibrium condition, we have

$$\frac{1}{2}\varepsilon_0\varepsilon_r\frac{V^2}{d^2} = \gamma \ln\frac{d_0}{d}$$

$$V^2 = d^2\,\frac{2\gamma}{\varepsilon_0\varepsilon_r}\ln\frac{d_0}{d} = K\,d^2\ln\frac{d_0}{d}$$

Differentiating with respect to d, we have

$$2V\frac{dV}{dd} = K\left[2d\ln\frac{d_0}{d} - d^2 . \frac{d}{d_0} . \frac{d_0}{d^2}\right] = 0$$

or $$2d\ln\frac{d_0}{d} = d$$

or $$\ln\frac{d_0}{d} = \frac{1}{2}$$

or $$\frac{d}{d_0} = 0.6$$

For any real value of voltage V, the reduction in thickness of the specimen cannot be more than 40%. If the ratio V/d at this value of V is less than the intrinsic strength of the specimen, a further increase in V shall make the thickness unstable and the specimen collapses.

The highest apparent strength is then obtained by substituting d = 0.6 d0 in the above expressions.

$$\frac{V}{d} = \sqrt{\frac{2\gamma}{\varepsilon_0\varepsilon_r}\ln 1.67} \text{ or } \frac{V}{d_0} = E_a = 0.6\left\{\frac{\gamma}{\varepsilon_0\varepsilon_r}\right\}^{1/2}$$

The above equation is approximate only as γ depends upon the mechanical stress. The possibility of instability occurring for lower average field is ignored i.e., the effect of stress concentration at irregularities is not taken into account.

2.12 THERMAL BREAKDOWN

When an insulating material is subjected to an electric field, the material gets heated up due to conduction current and dielectric losses due to polarization. The conductivity of the material increases with increase in temperature and a condition of instability is reached when the heat generated exceeds the heat dissipated by the material and the material breaks down.

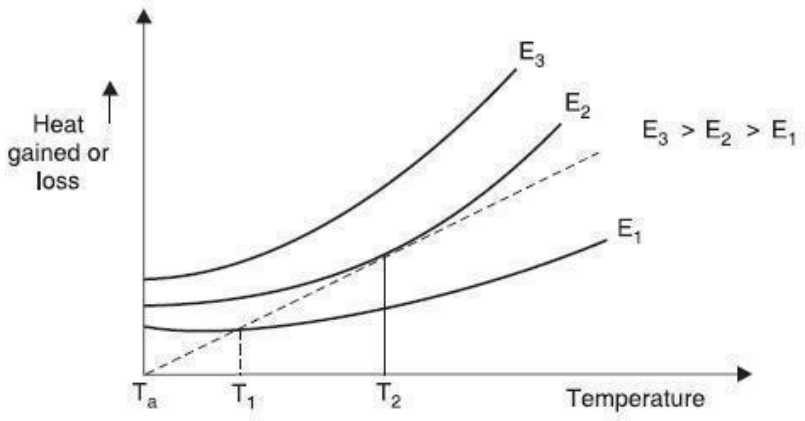

Figure 2.13 Thermal stability or instability of different fields

Fig. 2.13 shows various heating curves corresponding to different electric stresses as a function of specimen temperature. Assuming that the temperature difference between the ambient and the specimen temperature is small, Newton's law of cooling is represented by a straight line.

The test specimen is at thermal equilibrium corresponding to field E1 at temperature T1 as beyond that heat generated is less than heat lost. Unstable equilibrium exists for field E2 at T2, and for field E3 the state of equilibrium is never reached and hence the specimen breaks down thermally.

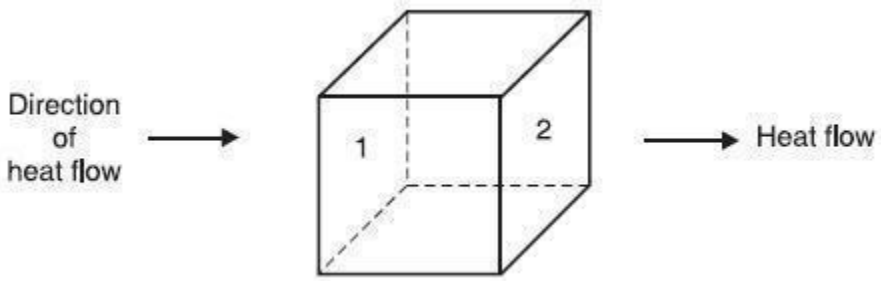

Figure: 2.14. Cubical specimen—Heat flow

In order to obtain basic equation for studying thermal breakdown, let us consider a small cube (Fig. 2.14) within the dielectric specimen with side Δx and temperature difference across its faces in the direction of heat flow (assume here flow is along x-direction) is ΔT. Therefore, the temperature gradient is

$$\frac{\Delta T}{\Delta x} \approx \frac{dT}{dx}$$

Let $\Delta x2 = A$. The heat flow across face 1

$$KA \frac{dT}{dx} \text{ Joules}$$

Heat flow across face 2

$$KA \frac{dT}{dx} - KA \frac{d}{dx}\left(\frac{dT}{dx}\right) \Delta x$$

Here the second term indicates the heat input to the differential specimen. Therefore, the heat absorbed by the differential cube volume

$$= \frac{KA \frac{d}{dx}\left(\frac{dT}{dx}\right) \Delta x}{\Delta V} = K \frac{d}{dx}\left(\frac{dT}{dx}\right)$$

The heat input to the block will be partly dissipated into the surrounding and partly it will

raise the temperature of the block. Let CV be the thermal capacity of the dielectric, σ the electrical conductivity, E the electric field intensity. The heat generated by the electric field = σE2 watts, and suppose the rise in temperature of the block is ΔT, in time dt, the power required to raise the temperature of the block by ΔT is

$$C_v \frac{dT}{dt} \text{ watts}$$

Therefore,

$$C_v \frac{dT}{dt} + K \frac{d}{dt}\left(\frac{dT}{dx}\right) = \sigma E^2$$

The solution of the above equation will give us the time required to reach the critical temperature Tc for which thermal instability will reach and the dielectric will lose its insulating properties.

However, unfortunately the equation can be solved in its present from CV, K and σ is all functions of temperature and in fact σ may also depend on the intensity of electrical field.

Therefore, to obtain solution of the equation, we make certain practical assumptions and we consider two extreme situations for its solution

Table: 2.3 Thermal breakdown voltage

Material		*Maximum thermal voltage in MV/cm*	
		d.c.	*a.c.*
Ceramics	HV Steatite	—	9.8
	LF Steatite	—	1.5
	High grade porcelain		2.8
Organic materials	Ebonite	—	1.45–2.75
	Polythene		3.5
	Polystyrene		5.0
	Polystyrene at 1 MHz		0.05
	Acrylic resins		0.3–1.0
Crystals	Mica muscovite	24	7–18
	Rock salt	38	1.4
Quartz	Perpendiculars to axis	12000	—
	Paralle to axis	66	—
	Impure	—	2.2

Table 2.3 gives for thick specimen, thermal breakdown values for some dielectric under a.c. and d.c. voltages at 20°C.

2.13 BREAKDOWN IN COMPOSITE DIELECTRICS

A vacuum system is one in which the pressure maintained is at a value below the atmospheric pressure and is measured in terms of mm of mercury. One standard atmospheric

pressure at 0°C is equal to 760 mm of mercury. One mm of Hg pressure is also known as one torr after the name of Torricelli who was the first to obtain pressures below atmosphere, with the help of mercury barometer. Sometimes 10^{-3} torr is known as one micron. It is now possible to obtain pressures as low as 10^{-8} torr.

In a Townsend type of discharge, in a gas, the mean free path of the particles is small and electrons get multiplied due to various ionization processes and an electron avalanche is formed. In a vacuum of the order of 10–5 torr, the mean free path is of the order of few meters and thus when the electrodes are separated by a few mm an electron crosses the gap without any collision. Therefore, in a vacuum, the current growth prior to breakdown cannot take place due to formation of electron avalanches.

However, if it could be possible to liberate gas in the vacuum by some means, the discharge could take place according to Townsend process. Thus, a vacuum arc is different from the general class of low and high pressure arcs. In the vacuum arc, the neutral atoms, ions and electrons do not come from the medium in which the arc is drawn but they are obtained from the electrodes themselves by evaporating its surface material. Because of the large mean free path for the electrons, the dielectric strength of the vacuum is a thousand times more than when the gas is used as the interrupting medium.

In this range of vacuum, the breakdown strength is independent of the gas density and depends only on the gap length and upon the condition of electrode surface. Highly polished and thoroughly degassed electrodes show higher breakdown strength. Electrodes get roughened after use and thus the dielectric strength or breakdown strength decreases which can be improved by applying successive high voltage impulses which of course does not change the roughened surface but removes the loosely adhering metal particles from the electrodes which were deposited during arcing. It has been observed that for a vacuum of 10^{-6} torr, some of the metals like silver, bismuth-copper etc. attain their maximum breakdown strength when the gap is slightly less than 3 mm. This property of vacuum switches permits the use of short gaps for fast operation.

2.14 ELECTRIC DISCHARGE IN VACUUM

The electric discharge in vacuum results from the neutral atoms, ions and electrons emitted from the electrodes themselves. Cathode spots are formed depending upon the current flowing. For low currents a highly mobile cathode spot is formed and for large currents a multiple number of cathode spots are formed. These spots constitute the main source of vapour in the arc. The processes involved in drawing the discharge will be due to high electric field between the contacts or resistive heating produced at the point of operation or a combination of the two. The cathode surfaces, normally, are not perfectly smooth but have many micro projections.

Due to their small area of cross-section, the projections will suffer explosive evaporation by resistive heating and supply sufficient quantity of vapour for the arc formation. Since in case of vacuum, the emission occurs only at the cathode spots and not from the entire surface of the

cathode, the vacuum discharge is also known as cold cathode discharge. In cold cathode the emission of electrons could be due to any of the combinations of the following mechanisms:

Field emission; (ii) Thermionic emission; (iii) Field and Thermionic emission; (iv) Secondary emission by positive ion bombardment; (v) Secondary emission by photons; and (vi) Pinch effect. The stability of discharge in vacuum depends upon: (i) the contact material and its vapour pressure, and (ii) circuit parameters such as voltage, current, inductance and capacitance. It has been observed that higher the vapour pressure at low temperature the better is the stability of the discharge. There are certain metals like Zn, Bi which show these characteristics and are better electrode materials for vacuum breakers. Besides the vapour pressure, the thermal conductivity of the metal also affects the current chopping level. A good heat conducting metal will cool its surface faster and hence its electrode surface temperature will fall which will result into reduction in evaporation rate and arc will be chopped because of insufficient vapour. On the other hand, a bad heat conductor will maintain its temperature and vaporization for a longer time and the arc will be more stable.

The process of multiplication of charged particles by the process of collision is very small in the space between the electrodes in vacuum, electron avalanche is not possible. If somehow a gas cloud could be formed in vacuum, the usual kind of breakdown process can take place. This is the line of action adopted by the researchers to study mechanism of breakdown in vacuum. By finding the way, gas cloud could be created in a vacuum.

PROBLEMS

1. A steady current of 600 μA flows through the plane electrode separated by a distance of 0.5 cm when a voltage of 10 kV is applied. Determine the Townsend's first ionization coefficient if a current of 60 μA flows when the distance of separation is reduced to 0.1 cm and the field is kept constant at the previous value.

Solution: Since the field is kept constant (i.e., if distance of separation is reduced, the voltage is also reduced by the same ratio so that V/d is kept constant).

$$I = I0\, e^{\alpha x}$$

Substituting two different sets of values,

$$\text{we have } 600 = I0\, e^{0.5\alpha} \text{ and } 60 = I0\, e^{0.1\alpha} \text{ or } 10 = e^{0.4\alpha} \text{ or } 0.4\,\alpha = 1n\ 10$$

$$0.4\,\alpha = 2.3026$$

$$\alpha = 5.75 \text{ ionizing collisions/cm.}$$

2. The following table gives two sets of experimental results for studying Townsend's mechanism. The field is kept constant in each set:

I set 30 kV/cm *Gap distance (mm)*	*II set kV/cm* *Observed current A*	
	I set	*II set*
0.5	1.5×10^{-13}	6.5×10^{-14}
1.0	5×10^{-13}	2.0×10^{-13}
1.5	8.5×10^{-13}	4×10^{-13}
2.0	1.5×10^{-12}	8×10^{-13}
2.5	5.6×10^{-12}	1.2×10^{-12}
3.0	1.4×10^{-10}	6.5×10^{-12}
3.5	1.4×10^{-10}	6.5×10^{-11}
4.0	1.5×10^{-9}	4.0×10^{-10}
5.0	7.0×10^{-7}	1.2×10^{-8}

The maximum current observed is 6×10^{-14} A. Determine the values of Townsend's first and second ionization coefficients.

3. The following observations were made in an experiment for determination of dielectric strength of transformer oil. Determine the power law equation.

Gap spacing	4	6	8	10
Breakdown Voltage (kV)	88	135	165	212

UNIT – III GENERATION OF HIGH VOLTAGES AND HIGH CURRENTS

3.1 GENERATION OF HIGH VOLTAGES AND HIGH CURRENTS

There are various applications of high D.C. voltages in industries, research medical sciences etc. HVDC transmission over both overhead lines and underground cables is becoming more and more popular. HVDC is used for testing HVAC cables of long lengths as these have very large capacitance and would require very large values of currents if tested on HVAC voltages. Even though D.C. tests on A.C. cables are convenient and economical, these suffer from the fact that the stress distribution within the insulating material is different from the normal operating condition. In industry it is being used for electrostatic precipitation of a sink in thermal power plants, electrostatic painting, cement industry, communication systems etc.

HVDC is also being used extensively in physics for particle acceleration and in medical equipments (X-Rays).The most efficient method of generating high D.C. voltages is through the process of rectification employing voltage multiplier circuits. Electrostatic generators have also been used for generating high D.C. voltages. According to IEEE standards 4-1978, the value of a direct test voltage is defined by its arithmetic mean value Vd and is expressed mathematically as

$$V_d = \int_0^T V(t)\,dt$$

Where T is the time period of the voltage wave having a frequency f = 1/T. Test voltages generated using rectifiers are never constant in magnitude. These deviate from the mean value periodically and this deviation is known as ripple. The magnitude of the ripple voltage denoted by δV is defined as half the difference between the maximum and minimum values of voltage i.e.,

$$\delta V = \frac{1}{2}[V_{max} - V_{min}]$$

and ripple factor is defined as the ratio of ripple magnitude to the mean value Vd i.e., δV/Vd.

The test voltages should not have ripple factor more than 5% or as specified in a specific standard for particular equipment as the requirement on voltage shape may differ for different applications.

3.1.1 Half-Wave Rectifier Circuit

The simplest circuit for generation of high direct voltage is the half wave rectifier shown in Fig. 3.1 Here RL is the load resistance and C the capacitance to smoothen the dace. output voltage. If the capacitor is not connected, pulsating dace. voltage is obtained at the output terminals where as with the capacitance C, the pulsation at the output terminal are reduced. Assuming the ideal transformer and small internal resistance of the diode during conduction the capacitor C is charged to the maximum voltage Vmax during conduction of the diode D. Assuming that there is no load connected, the dace. Voltage across capacitance remains constant

at Vmax whereas the supply voltage oscillates between ± Vmax and during negative half cycle the potential of point A becomes – Vmax and hence the diode must be rated for 2Vmax. This would also be the case if the transformer is grounded at A instead of B as shown in Fig. 3.1 (a). Such a circuit is known as voltage doublers due to Villard for which the output voltage would be taken across D. This dace. voltage, however, oscillates between zero and 2Vmax and is needed for the Cascade circuit.

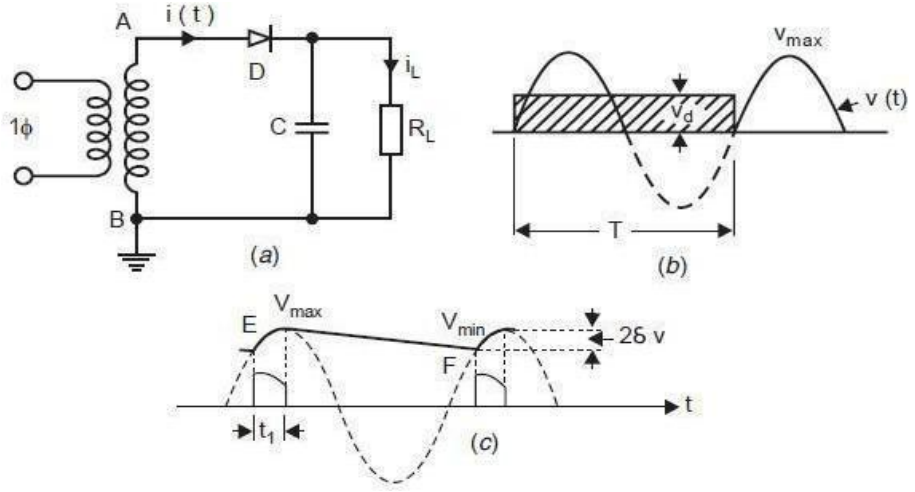

Figure: 3.1 (a) Single Phase rectifier (b) Output voltage without C (c) Output voltage with Cuff

the circuit is loaded, the output voltage does not remain constant at Vmax. After point E (Fig.3.1 (c)), the supply voltage becomes less than the capacitor voltage, diode stops conducting.

The capacitor cannot discharge back into the a.c. system because of one way action of the diode. Instead, the current now flows out of C to furnish the current ill through the load. While giving up this energy, the capacitor voltage also decreases at a rate depending on the time constant CR of the circuit and it reaches the point F corresponding to V min. Beyond F, the supply voltage is greater than the capacitor voltage and hence the diode D starts conducting charging the capacitor C again to Vmax and also during this period it supplies current to the load also. This second pulse of imp(ic + il) is of shorter duration than the initial charging pulse as it serve mainly to restore into C the energy that C meanwhile had supplied to load. Thus, while each pulse of diode current lasts much less than a half cycle, the load receives current more continuously from C. Assuming the charge supplied by the transformer to the load during the conduction period t, which is very small to be negligible, the charge supplied by the transformer to the capacitor during conduction equals the charge supplied by the capacitor to the load. Note that ic>> iL. During one period T = 1/f of the a.c voltage, a charge Q is transferred to the load RL and is given as

$$Q = \int_T i_L(t)\,dt = \int_T \frac{V_{RL}(t)}{R_L}dt = IT = \frac{I}{f}$$

where I is the mean value of the dace output iL(t) and VRL(t) the dace. voltage which includes a ripple as shown in Fig. 2.1 (c). This charge is supplied by the capacitor over the period T when the voltage changes from Vmax to Vmin over approximately period T neglecting the conduction period of the diode. Suppose at any time the voltage of the capacitor is V and it decreases by an amount of dV over the time dt then charge delivered by the capacitor during this time is

$$dQ = CdV$$

Therefore, if voltage changes from Vmax to Vmin, the charge delivered by the capacitor

$$\int dQ = \int_{V_{max}}^{V_{min}} CdV = -C\left(V_{max} - V_{min}\right)$$

Or the magnitude of charge delivered by the capacitor

$$Q = C\,(V_{max} - V_{min})$$

Using equation

$$Q = 2\delta VC$$

$$2\delta VC = IT$$

Therefore,

Or

The above equation shows that the ripple in a rectifier output depends upon the load current and the circuit parameter like f and C. The product fC is, therefore, an important design factor for the rectifiers. The higher the frequency of supply and larger the value of filtering capacitor the smaller will be the ripple in the dace. output. The single phase half-wave rectifier circuits have the following disadvantages:

- The size of the circuits is very large if high and pure dace. output voltages are desired.
- The h.t. transformer may get saturated if the amplitude of direct current is comparable with the nominal alternating current of the transformer.

It is to be noted that all the circuits considered here are able to supply relatively low currents and therefore are not suitable for high current applications such as HVDC transmission. When high dace. voltages are to be generated, voltage doubler or cascaded voltage multiplier circuits are used. One of the most popular doubler circuit due to Greinacher is shown in Fig. 3.2. Suppose B is more positive with respect to A and the diode D1 conducts thus charging the capacitor C1 to Vmax with polarity as shown in Fig. 3.2. During the next half cycle terminal A of the capacitor C1 rises to Vmax and hence terminal M attains a potential of 2 Vmax. Thus, the capacitor C2 is charged to 2 Vmax through D2. Normally the voltage across the load will be less than 2 Vmax depending upon the time constant of the circuit C2RL.

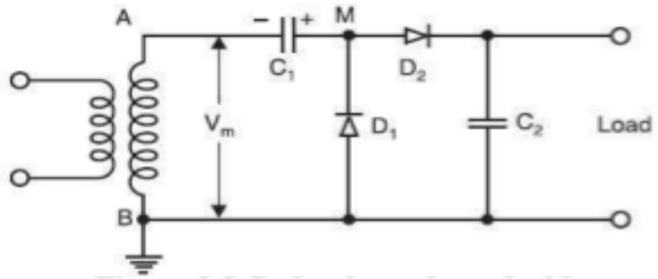

Figure: 3.2 Greinacher voltage doubler circuit

3.1.2 Cockroft-Walton Voltage Multiplier Circuit

In 1932, Cockroft and Walton suggested an improvement over the circuit developed by reinacher for producing high D.C. voltages. Fig. 3.3. Shows a multistage single phase cascade circuit of the Cockroft-Walton type. No Load Operation: The portion ABM′MA is exactly identical to Greinarcher voltage doublers circuit and the voltage across C becomes 2Vmax when M attains a voltage 2Vmax.During the next half cycle when B becomes positive with respect to A, potential of M falls and, therefore, potential of N also falls becoming less than potential at M′ hence C2 is charged through D2. Next half cycle A becomes more positive and potential of M and N rise thus charging C′2 throughD′2. Finally all the capacitors C′1, C′2, C′3, C1, C2, and C3 are charged. The voltage across the column of capacitors consisting of C1, C2, C3, keeps on oscillating as the supply voltage alternates.

This column, therefore, is known as oscillating column. However, the voltage across the capacitances C′1, C′2, C′3, remains constant and is known as smoothening column. The voltages at M′, N′, and O′ are 2 Vmax 4 Vmax and 6 Vmax. Therefore, voltage across all the capacitors is 2 Vmax except for C1where it is Vmax only. The total output voltage is 2nVmax where n is the number of stages. Thus, the use of multistage arranged in the manner shown enables very high voltage to be obtained. The equal stress of the elements (both capacitors and diodes) used is very helpful and promotes a modular design of such generators.

Generator Loaded: When the generator is loaded, the output voltage will never reach the value 2n Vmax. Also, the output wave will consist of ripples on the voltage. Thus, we have to deal with two quantities, the voltage drop ΔV and the ripple δV.In 1932, Cockroft and Walton suggested an improvement over the circuit developed by Greinacher for producing high D.C. voltages. Fig. 2.3. shows a multistage single phase cascade circuit of the Cockroft-Walton type.

No Load Operation:

The portion ABM′MA is exactly identical to Greinarcher voltage doublers circuit and the voltage across *C* becomes 2*V*maxwhen *M* attains a voltage 2*V*max.During the next half cycle when *B* becomes positive with respect to *A,* potential of *M* falls and, therefore, potential of *N* also falls becoming less than potential at *M*′ hence *C*2 is charged through*D*2. Next half cycle *A* becomes more positive and potential of *M* and *N* rise thus charging *C*′2 through*D*′2. Finally all the capacitors *C*′1, *C*′2, *C*′3, *C*, *C*2, and C3 are charged. The voltage across the column of capacitors

consisting of $C1$, $C2$, $C3$, keeps on oscillating as the supply voltage alternates. This column, therefore, is known as oscillating column.

However, the voltage across the capacitances $C'1$,$C'2$, $C'3$, remains constant and is known as smoothening column. The voltages at M', N', and O are 2 Vmax 4 Vmax and 6 Vmax. Therefore, voltage across all the capacitors is 2 Vmax except for $C1$where it is Vmax only. The total output voltage is $2nV$max where n is the number of stages. Thus, the use of multistage arranged in the manner shown enables very high voltage to be obtained. The equal stress of the elements (both capacitors and diodes) used is very helpful and promotes a modular design of such generators.

Generator Loaded:

When the generator is loaded, the output voltage will never reach the value $2n$ Vmax. Also, the output wave will consist of ripples on the voltage. Thus, we have to deal with two quantities, the voltage drop V and the ripple Suppose a charge q is transferred to the load per cycle. This charge is q = I/f = IT. The charge comes from the smoothening column, the series connection of C′1, C′2, C′3,. If no charge were transferred during T from this stack via D1, D2, D3, to the oscillating column, the peak to peak ripple would merely be But in practice charges are transferred.

The process is explained with the help of circuits in Fig. 3.4 (a) and (b).Fig. 3.4 (a) shows arrangement when point A is more positive with reference to B and charging of smoothing column takes place and Fig. 3.4 (b) shows the arrangement when in the next half cycle Becomes positive with reference to A and charging of oscillating column takes place. Refer to Fig. 3.4(a). Say the potential of point O′ is now 6 Vmax. This discharges through the load resistance and say the charge lost is q = IT over the cycle. This must be regained during the charging cycle (Fig. 3.4 (a)) for stable operation of the generator.

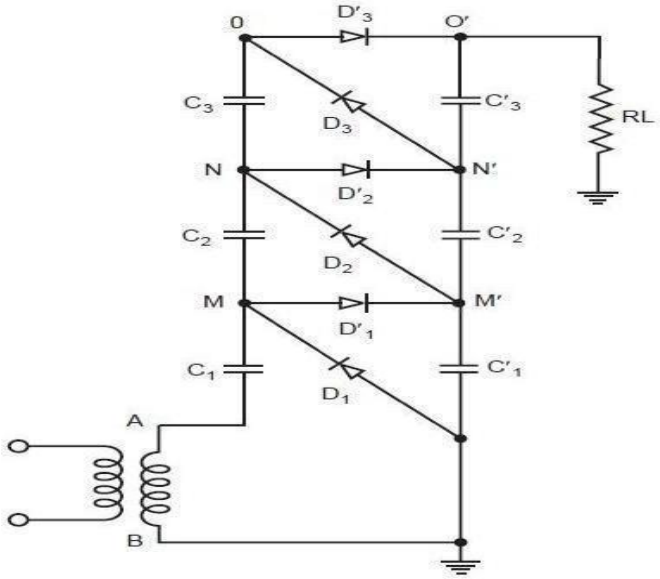

Figure: 3.3 multistage single phase cascade circuit of the Cockroft-Walton type

$$2\delta V = IT \sum_{n=0}^{n} \frac{1}{C'_i}$$

.

C3 is, therefore supplied a charge q from C3. For this C2 must acquire charge of 2q so that it can supply q charge to the load and q to C3, in the next half cycle termed by cockloft and Walton as the transfer cycle (Fig. 3.4 (b)). Similarly C′1 must acquire for stability reasons charge 3q so that it can supply a charge q to the load and 2q to the capacitor C2 in the next half cycle (transfer half cycle). During the transfer cycle shown in Fig. 3.4 (b), the diodes D1, D2, D3, conduct when B is positive with reference to A. Here C′2 transfers q charge to C3, C1 transfers charge 2q to C2 and the transformer provides change 3q.For n-stage circuit, the total ripple will be

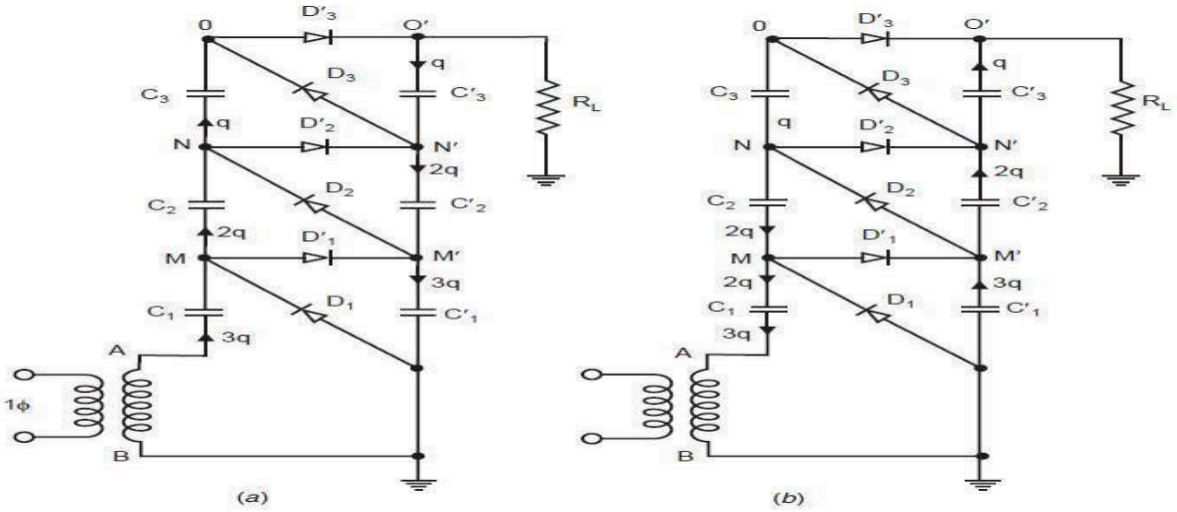

Figure: 3.4 (a) Charging of smoothening Column (b) Charging of oscillating column

$$2\delta V = \frac{I}{f}\left(\frac{1}{C'_n} + \frac{2}{C'_{n-1}} + \frac{3}{C'_{n-2}} + \ldots + \frac{n}{C'_1}\right)$$

$$\delta V = \frac{I}{2f}\left(\frac{1}{C'_n} + \frac{2}{C'_{n-1}} + \frac{3}{C'_{n-2}} + \ldots + \frac{n}{C'_1}\right)$$

From above equation, it is clear that in a multistage circuit the lowest capacitors are responsible for most ripples and it is, therefore, desirable to increase the capacitance in the lower stages. However, this is objectionable from the view point of High Voltage Circuit where if the load is large and the load voltage goes down, the smaller capacitors (within the column) would be overstressed. Therefore, capacitors of equal value are used in practical circuits i.e., C′n = C′n – 1 =C′1 = C and the ripple is given as

$$\delta V = \frac{I}{2fC}\frac{n(n+1)}{2} = \frac{In(n+1)}{4fC}$$

The second quantity to be evaluated is the voltage drop ΔV which is the difference between the theoretical no load voltage 2nVmax and the on load voltage. In order to obtain the voltage drop ΔV refer to Fig. 3.4 (a).Here C′1 is not charged up to full voltage 2Vmax but only to 2Vmax – 3q/C because of the charge given up through C1 in one cycle which gives a voltage drop of 3q/C = 3I/fC The voltage drop in the transformer is assumed to be negligible. Thus, C2 is charged to the voltage.

$$\left(2V_{max} - \frac{3I}{fC}\right) - \frac{3I}{fC}$$

In general for a *n*-stage generator

$$2V_{max} - \left(\frac{3I + 3I + 2I}{fC}\right)$$

$$\Delta V_1 = \frac{3I}{fC}$$

$$\Delta V_2 = \{2 \times 3 + (3-1)\}\frac{I}{fC}$$

$$\Delta V_3 = (2 \times 3 + 2 \times 2 + 1)\frac{I}{fC}$$

$$\Delta V_n = \frac{nI}{fC}$$

$$\Delta V_{n-1} = \frac{I}{fC}\{2n + (n-1)\}$$

$$\Delta V_{n-2} = \frac{I}{fC}\{2n + 2(n-1) + (n-2)\}$$

.
.
.

$$\Delta V_1 = \frac{I}{fC}\{2n + 2(n-1) + 2(n-2) + \ldots 2 \times 3 + 2 \times 2 + 1\}$$

$$\Delta V = \Delta V_n + \Delta V_{n-1} + \ldots + \Delta V_1$$

After omitting *I*/*fC,* the series can be rewritten as:

$$T_n = n$$

$$T_{n-1} = 2n + (n-1)$$

$$T_{n-2} = 2n + 2(n-1) + (n-2)$$

$$T_{n-3} = 2n + 2(n-1) + 2(n-2) + (n-3)$$

.
.
.

$$T_1 = 2n + 2(n-1) + 2(n-2) + \ldots + 2 \times 3 + 2 \times 2 + 1$$

$$T = T_n + T_{n-1} + T_{n-2} + \ldots + T_1$$

To sum up we add the last term of all the terms (*Tn* through *T*1) and again add the last term of the remaining term and so on, *i.e.,*

$$
\begin{aligned}
&[n + (n-1) + (n-2) + \ldots + 2 + 1] \\
&+ [2n + 2(n-1) + 2(n-2) + \ldots + 2 \times 2] \\
&+ [2n + 2(n-1) + \ldots + 2 \times 4 + 2 \times 3] \\
&+ [2n + 2(n-1) + \ldots + 2 \times 4] \\
&+ [2n + 2(n-1) + 2(n-2) + \ldots + 2 \times 5] + \ldots [2n]
\end{aligned}
$$

Rearranging the above terms we have

$$
\begin{aligned}
&n + (n-1) + (n-2) + \ldots + 2 + 1 \\
&+ [2n + 2(n-1) + 2(n-2) + \ldots + 2 \times 2 + 2 \times 1] - 2 \times 1 \\
&+ [2n + 2(n-1) + 2(n-2) + \ldots + 2 \times 3 + 2 \times 2 + 2 \times 1] - 2 \times 2 - 2 \times 1 \\
&+ [2n + 2(n-1) + 2(n-2) + \ldots + 2 \times 4 + 2 \times 3 + 2 \times 2 + 2 \times 1] \\
&- 2 \times 3 - 2 \times 2 - 2 \times 1 \\
&\cdot \\
&\cdot \\
&\cdot \\
&[2 \times n + 2(n-1) + \ldots + 2 \times 2 + 2 \times 1] - [2(n-1)] \\
&\quad + 2(n-2) + \ldots + 2 \times 2 + 2 \times 1]
\end{aligned}
$$

or $n + (n-1) + (n-2) + \ldots + 2 + 1$

Plus $(n-1)$ number of terms of 2 $[n + (n-1) + \ldots + 2 + 1]$

minus 2 $[1 + (1+2) + (1+2+3) + \ldots + \ldots \{1 + 2 + 3 + \ldots (n-1)\}]$

The last term (minus term) is rewritten as

$$
\begin{aligned}
&2[1 + (1+2) + \ldots + \{1 + 2 + 3 + \ldots (n-1)\} + \{1 + 2 + \ldots + n\}] \\
&\quad - 2[1 + 2 + 3 + \ldots + n]
\end{aligned}
$$

The nth term of the first part of the above series is given as

$$t_n = \frac{2n(n+1)}{2} = (n^2 + n)$$

Therefore, the above terms are equal to

$$
\begin{aligned}
&= \Sigma (n^2 + n) - 2 \Sigma n \\
&- \Sigma (n^2 - n)
\end{aligned}
$$

Taking once again all the term we have

$$
\begin{aligned}
T &= \Sigma n + 2(n-1) \Sigma n - \Sigma (n^2 - n) \\
&= 2n \Sigma n - \Sigma n^2 \\
&= 2n \cdot \frac{n(n+1)}{2} - \frac{n(n+1)(2n+1)}{6} \\
&= \frac{6(n^3 + n^2) - n(2n^2 + 3n + 1)}{6} \\
&= \frac{6n^3 + 6n^2 - 2n^3 - 3n^2 - n}{6} \\
&= \frac{4n^3 + 3n^2 - n}{6} = \frac{2}{3}n^3 + \frac{n^2}{2} - \frac{n}{6}
\end{aligned}
$$

$$n \cdot \frac{nI}{2fC}$$

Hence $$\Delta V = \frac{I}{fC}\left(\frac{2}{3}n^3 - \frac{n}{6}\right)$$

If n ≥4 we find that the linear term can be neglected and therefore, the voltage term approximated to

$$\Delta V = \frac{I}{fC}\cdot\frac{2}{3}n^3$$

From above it is clear that for a given number of stages, a given frequency and capacitance of each stage, the output voltage decrease linearly with load current I. For a given load, however, V0= (V0max– V) may rise initially with the number of stages n, and reaches a maximum value but decays beyond on optimum number of stage. The optimum number of stages assuming a constant Vmax, I, f and C can be obtained for maximum value of V0 max by differentiating above equation with respect to n and equating it to zero

$$\frac{dV_{max}}{dn} = 2V_{max} - \frac{2}{3}\frac{I}{fC}3n^2 = 0$$

$$= V_{max} - \frac{I}{fC}n^2 = 0$$

or $$n_{opt} = \sqrt{\frac{V_{max}fC}{I}}$$

Substituting n_{opt} in equation (2.12) we have

$$(V_{0\,max})_{max} = \sqrt{\frac{V_{max}fC}{I}}\left(2V_{max} - \frac{2I}{3fC}\frac{V_{max}fC}{I}\right)$$

$$= \sqrt{\frac{V_{max}fC}{I}}\left(2V_{max} - \frac{2}{3}V_{max}\right)$$

$$= \sqrt{\frac{V_{max}fC}{I}}\cdot\frac{4}{3}V_{max}$$

It is to be noted that in general it is more economical to use high frequency and smaller value of capacitance to reduce the ripples or the voltage drop rather than low frequency and high capacitance. Cascaded generators of Cockroft-Walton type are used and manufactured worldwide these days. A typical circuit is shown in Fig. 3.5. In general a direct current up to 20 mA is required for high voltages between 1 MV and 2 MV. In case where a higher value of current is required, symmetrical cascaded rectifiers have been developed. These consist of mainly two rectifiers in cascade with a common smoothing column. The symmetrical cascaded rectifier has a smaller voltage drop and also a smaller voltage ripple than the simple cascade. The alternating current input to the individual circuits must be provided at the appropriate high potential; this can be done by means of isolating transformer. Fig. 3.6 shows a typical cascaded rectifier circuit. Each stage consists of one transformer which feeds two half wave rectifiers.

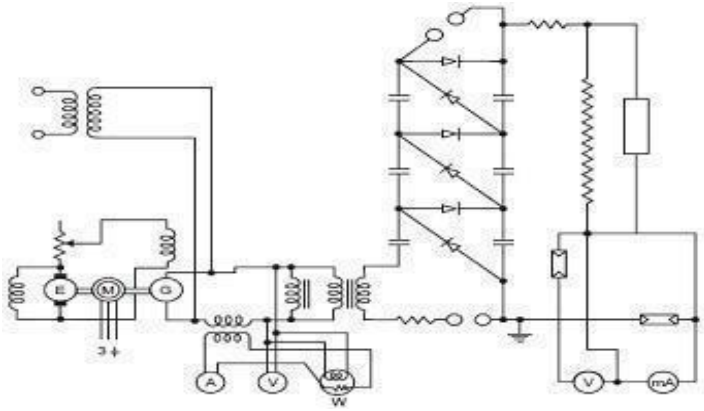

Figure: 3.5 A Typical Cockroft circuit

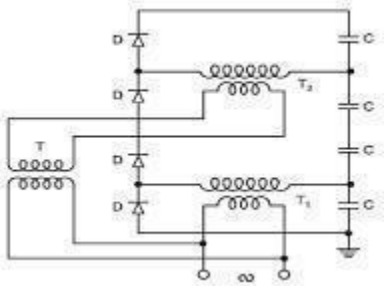

Figure: 3.6 Cascaded rectifier circuit

As the storage capacitors of these half wave rectifiers are series connected even the h.v. winding of T1 cannot be grounded. This means that the main insulation between the primary and the secondary winding of T1 has to be insulated for a dace. voltage of magnitude Vmax, the peak voltage of T1. The same is required for T2 also but this time the high voltage winding is at a voltage of 3Vmax. It would be difficult to provide the whole main insulation within this transformer, an isolating transformer T suppliesT2. The cascading of every stage would thus require an additional isolating transformer which makes this circuit less economical for more than two stages.

3.1.3 Electrostatic Generator

In electromagnetic generators, current carrying conductors are moved against the electromagnetic forces acting upon them. In contrast to the generator, electrostatic generators convert mechanical energy into electric energy directly. The electric charges are moved against the force of electric fields, thereby higher potential energy is gained at the cost of mechanical energy. The basic principle of operation is explained with the help of Fig. 2.7.An insulated belt is moving with uniform velocity ν in an electric field of strength E (x). Suppose the width of the belt is b and the charge density ζ consider a length dx of the belt, the charge dq = ζ bdx. The force experienced by this charge (or the force experienced by the belt).

$$dF = Edq = E\,\sigma\, bdx$$

$$F = \sigma b \int Edx$$

Normally the electric field is uniform

$$F = \sigma b V$$

$$= \text{Force} \times \text{Velocity}$$

$$= Fv = \sigma b V v$$

$$I = \frac{dq}{dt}\sigma b \frac{dx}{dt} = \sigma b v$$

Now current

The power required to move the belt $P = Fv = \sigma b V v = VI$

Assuming no losses, the power output is also equal to *VI.*

Fig. 3.8 shows belt driven electrostatic generator developed by Van de Graaf in 1931. An insulating belt is run over pulleys. The belt, the width of which may vary from a few cms to meters is driven at a speed of about 15 to 30 m/sec, by means of a motor connected to the lower pulley. The belt near the lower pully is charged electro statically by an excitation arrangement. The lower charge spray unit consists of a number of needles connected to the controllable dace. source (10 kV–100 kV) so that the discharge between the points and the belt is maintained. The charge is conveyed to the upper end where it is collected from the belt by discharging points connected to the inside of an insulated metal electrode through which the belt passes. The entire equipment is enclosed in an earthed metal tank filled with insulating gases of good dielectric strength viz. SF6 etc. So that the potential of the electrode could be raised to relatively higher voltage without corona discharges or for a certain voltage a smaller size ofthe equipment will result. Also, the shape of the h.t., electrode should be such that the surface gradient of electric field is made uniform to reduce again corona discharges, even though it is desirable to avoid corona entirely. An isolated sphere is the most favorable electrode shape and will maintain a uniform field *E* with a voltage of *Er* where *r* is the radius of the sphere.

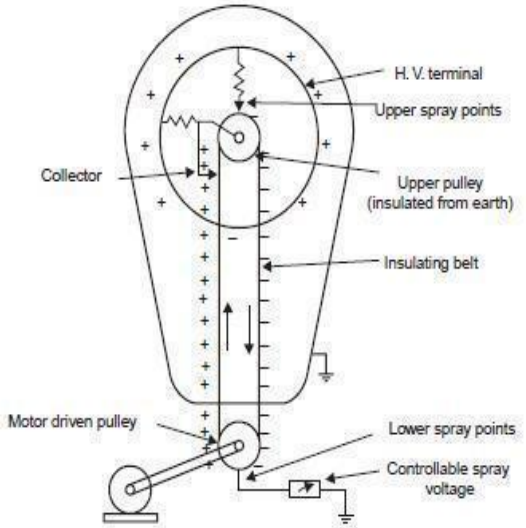

Figure: 3.7 Van de Graaf generator

As the h.t. electrode collects charges its potential rises. The potential at any instant is given as $V = q/C$ where q is the charge collected at that instant. It appears as though if the charge were collected for a long time any amount of voltage could be generated. However, as the potential of electrode rises, the field set up by the electrode increases and that may ionize the surrounding medium and, therefore, this would be the limiting value of the voltage. In practice, equilibrium is established at a terminal voltage which is such that the charging current

$$\left(I = C\frac{dV}{dt}\right)$$

equals the discharge current which will include the load current and the leakage and corona loss currents. The moving belt system also distorts the electric field and, therefore, it is placed within properly shaped field grading rings. The grading is provided by resistors and additional corona discharge elements. The collector needle system is placed near the point where the belt enters the h.t. terminal. A second point system excited by a self-inducing arrangement enables the down going belt to be charged to the polarity opposite to that of the terminal and thus the rate of charging of the latter, for a given speed, is doubled. The self inducing arrangement requires insulating the upper pulley and maintaining it at a potential higher than that of the h.t. terminal by connecting the pulley to the collector needle system. The arrangement also consists of a row of points (shown as upper spray points in Fig. 3.7) connected to the inside of the h.t. terminal and directed towards the pulley above its points of entry into the terminal.

As the pulley is at a higher potential (positive), the negative charges due to corona discharge at the upper spray points are collected by the belt. This neutralizes any remaining positive charge on the belt and leaves an excess of negative charges on the down going belt to be neutralized by the lower spray points. Since these negative charges leave the h.t. terminal, the potential of the h.t. terminal is raised by the corresponding amount. In order to have a rough estimate of the current supplied by the generator, let us assume that the electric field E is normal to the belt and is homogeneous.

We know that $D = \varepsilon_0 E$ where D is the flux density and since the medium surrounding the h.t. terminal is say air $\varepsilon_r = 1$ and $\varepsilon_0 = 8.854 \times 10–12$ F/meter. According to Gauss law, $D = \zeta$ the surface charge density. From above equation it is clear that current I depend upon ζ, b and ν. The belt width (b) and velocity being limited by mechanical reasons, the current can be increased by having higher value of ζ. ζ can be increased by using gases of higher dielectric strength so that electric field intensity E could be increased without the inception of ionization of the medium surrounding the h.t. terminal. However, with all these arrangements, the actual short circuit currents are limited only to a few mA even for large generators.

The advantages of the generator are:

- Very high voltages can be easily generated
- Ripple free output
- Precision and flexibility of control

The disadvantages are:

- Low current output
- Limitations on belt velocity due to its tendency for vibration. The vibrations may make it difficult to have an accurate grading of electric fields. These generators are used in nuclear physics laboratories for particle acceleration and other processes in research work.

3.1.4 Generation of high a.c. voltages

Most of the present day transmission and distribution networks are operating on a.c. voltages and hence most of the testing equipments relate to high a.c. voltages. Even though most of the equipments on the system are 3-phase systems, a single phase transformer operating at power frequency is the most common from of HVAC testing equipment. Test transformers normally used for the purpose have low power rating but high voltage ratings. These transformers are mainly used for short time tests on high voltage equipments. The currents required for these tests on various equipments are given below:

- Insulators, C.B., bushings, Instrument
- Transformers = 0.1– 0.5 A
- Power transformers, h.v. capacitors. = 0.5–1 A
- Cables = 1 A and above

The design of a test transformer is similar to a potential transformer used for the measurement of Voltage and power in transmission lines. The flux density chosen is low so that it does not draw large magnetizing current which would otherwise saturate the core and produce higher harmonics.

Cascaded Transformers

For voltages higher than 400 KV, it is desired to cascade two or more transformers depending upon the voltage requirements. With this, the weight of the whole unit is subdivided into single units and, therefore, transport and erection becomes easier. Also, with this, the transformer cost for a given voltage may be reduced, since cascaded units need not individually possess the expensive and heavy insulation required in single stage transformers for high voltages exceeding 345 kV. It is found that the cost of insulation for such voltages for a single unit becomes proportional to square of operating voltage. Fig. 3.9 shows a basic scheme for cascading three transformers. The primary of the first stage transformer is connected to a low voltage supply. A voltage is available across the secondary of this transformer. The tertiary winding (excitation winding) of first stage has the same number of turns as the primary winding, and feeds the primary of the second stage transformer. The potential of the tertiary is fixed to the potential V of the secondary winding as shown in Fig. 3.9.

The secondary winding of the second stage transformer is connected in series with the secondary winding of the first stage transformer, so that a voltage of 2V is available between the

ground and the terminal of secondary of the second stage transformer. Similarly, the stage-III

transformer is connected in series with the second stage transformer. With this the output voltage between ground and the third stage transformer, secondary is 3V. it is to be noted that the individual stages except the upper most must have three-winding transformers. The upper most, however, will be a two winding transformer. Fig. 3.9 shows metal tank construction of transformers and the secondary winding is not divided. Here the low voltage terminal of the secondary winding is connected to the tank. The tank of stage-I transformer is earthed. The tanks of stage-II and stage-III transformers have potentials of V and 2V, respectively above earth and, therefore, these must be insulated from the earth with suitable solid insulation.

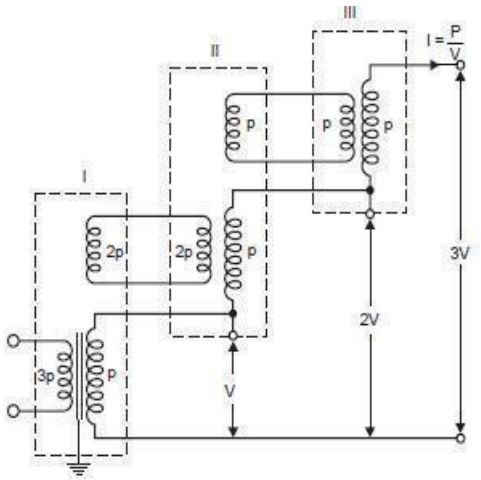

Figure: 3.8 Basic 3 stage cascaded transformer

Through h.t. bushings, the leads from the tertiary winding and the h.v. winding are brought out to be connected to the next stage transformer. However, if the high voltage windings are of mid-point potential type, the tanks are held at 0.5 V, 1.5 V and 2.5 V, respectively. This connection results in a cheaper construction and the high voltage insulation now needs to be designed for V/2 from its tank potential. The main disadvantage of cascading the transformers is that the lower stages of the primaries of the transformers are loaded more as compared with the upper stages. The loading of various windings is indicated by P in Fig. 3.8. For the three-stage transformer, the total output VA will be 3VI = 3P and, therefore, each of the secondary winding of the transformer would carry a current of I = P/V.

The primary winding of stage-III transformer is loaded with P and so also the tertiary winding of second stage transformer. Therefore, the primary of the second stage transformer would be loaded with 2P.Extending the same logic; it is found that the first stage primary would be loaded with P. Therefore, while designing the primaries and tertiary's of these transformers, this factor must be taken into consideration. The total short circuit impedance of a cascaded transformer from data for individual stages can be obtained. The equivalent circuit of an individual stage is shown in Fig. 3.9.Here Zp, Zs, and Zt, are the impedances associated with each winding. The impedances are shown in series with an ideal 3-winding transformer with corresponding number of turns Np, Ns and Nt. The impedances are obtained either from calculated or experimentally-derived results of the three short circuit tests between any two windings taken at a time.

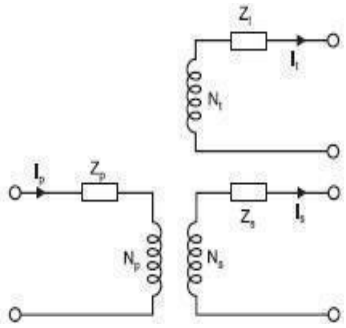

Figure: 3.9 Equivalent circuit of one stage

- Let *Zps* = leakage impedance measured on primary side with secondary short circuited and tertiary open.
- *Zpt* = leakage impedance measured on primary side with tertiary short circuited and secondary open.
- *Zst* = leakage impedance on secondary side with tertiary short circuited and primary open.

If these measured impedances are referred to primary side then

$$Z_{ps} = Z_p + Z_s,\ Z_{pt} = Z_p + Z_t \quad \text{and} \quad Z_{st} = Z_s + Z_t$$

Solving these equations, we have

$$Z_p = \frac{1}{2}(Z_{ps} + Z_{pt} - Z_{st}),\ Z_s = \frac{1}{2}(Z_{ps} + Z_{st} - Z_{pt})$$

$$Z_t = \frac{1}{2}(Z_{pt} + Z_{st} - Z_{ps})$$

Assuming negligible magnetizing current, the sum of the ampere turns of all the windings must be zero.

$$N_p I_p - N_s I_s - N_t I_t = 0$$

Assuming lossless transformer, we have,

$$Z_p = jX_p,\ Z_s = jX_s \quad \text{and} \quad Z_t = jX_t$$

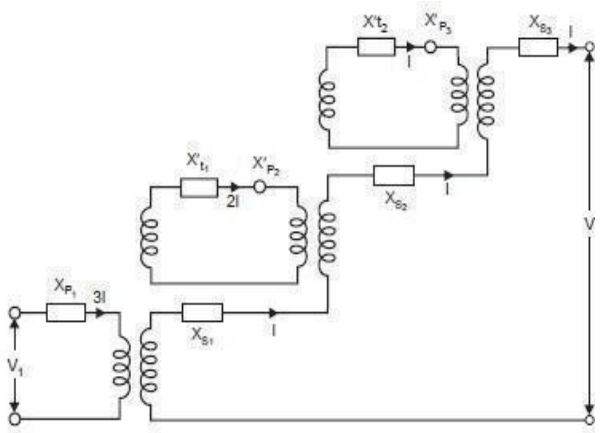

Figure: 3.10 Equivalent circuit of 3-stage transformer

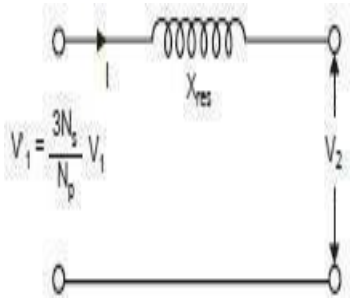

Figure: 3.11 A simplified equivalent circuit

It has been observed that the impedance of a two-stage transformer is about 3–4 times the impedance of one unit and three-stage impedance is 8–9 times the impedance of one unit transformer. Hence, in order to have a low impedance of a cascaded transformer, it is desirable that the impedance of individual units should be as small as possible.

3.1.5 Reactive Power Compensation

As is mentioned earlier, the test transformers are used for testing the insulation of various electrical equipments. This means the load connected to these transformers is highly capacitive. Therefore, if rated voltage is available at the output terminals of the test transformer and a test piece (capacitive load) is connected across its terminals, the voltage across the load becomes higher than the rated voltage as the load draws leading current. Thus, it is necessary to regulate the input voltage to the test transformer so that the voltage across the load, which is variable, depending on the test specimen, remains the rated voltage. Another possibility is that a variable inductor should be connected across the supply as shown in Fig. 3.11 so that the reactive power supplied by the load is absorbed by the inductor and thus the voltage across the test transformer is maintained within limits.

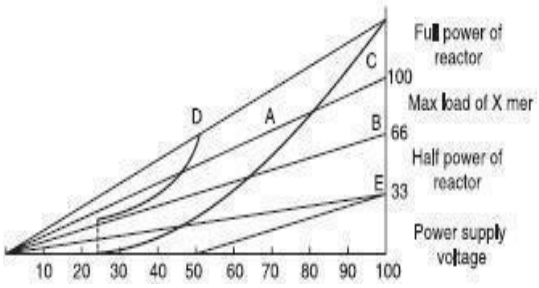

Figure: 3.12 Reactive power compensation

It should be noted that the test transformer should be able to supply the maximum value of load current for which it has been designed at all intermediate voltages including the rated voltage. The power voltage characteristic is, therefore, a straight line as shown by line *A* in Fig. 3.14. The compensating reactive power absorbed by the air-cored inductor is shown on parabolas *B, C* and *D*. These will be parabolas as the reactive power = $V2/X$. Curve *B* corresponds to the condition when the transformer primary is connected in parallel and the reactor is connected at position 1 in Fig. 3.12.Similarly Curve *C*—Transformer primary connected in parallel and reactor at position 1 connected.

Curve *D*—Transformer primary connected in series and reactor at position 2.When the primary series is connected, for the same supply voltage, voltage per turn of primary becomes half its value when it is parallel connected and, therefore, the secondary voltage becomes 1/2of the rated voltage and hence the curve starts at 50% of the rated voltage. The power of the voltage regulator is proportional to the supply voltage and, therefore, is represented by line *E* in Fig. 3.12 and the maximum power at rated voltage is 33.3% of the maximum power requirement of the transformer. All possible operating conditions of the test transformer lie within the triangular area enclosed by the line *A,* the abscissa and the 100% rated voltage line.

This area has been sub-divided into different parts, so that the permissible supply power (Here 33% of maximum transformer load) is never exceeded. The value of the highest voltage is always taken for the evaluation of the compensation arrangement. Since the impedance of the test transformer is usually large (about 20–25%), the range under 25% of the rated voltage is not considered. It is clear from the above considerations that the design of the compensating reactor depends upon

- The capacitance and operating voltage of test specimen
- The power rating of the available regulator.
- The possibility of different connections of the winding of test transformer.
- The power rating of the test transformer.

In order that the test laboratory meets all the different requirements, every particular case must be investigated and a suitable reactor must be designed for reactive power compensation.In multistage transformers with large power output, it is desirable to provide reactive power Compensation at every stage, so that the voltage stability of the test transformer is greatly improved.

3.1.6 Series Resonant Circuit

The equivalent circuit of a single-stage-test transformer along with its capacitive load is shown in Fig.3.14. Here $L1$ represents the inductance of the voltage regulator and the transformer primary, L the exciting inductance of the transformer, $L2$ the inductance of the transformer secondary and C the capacitance of the load. Normally inductance L is very large as compared to $L1$ and $L2$ and hence its shunting effect can be neglected. Usually the load capacitance is variable and it is possible that for certain loading, resonance may occur in the circuit suddenly and the Current will then only be limited by the resistance of the circuit and the voltage across the test specimen may go up as high as 20 to 40 times the desired value. Similarly, presence of harmonics due to saturation of iron core of transformer may also result in resonance. Third harmonic frequencies have been found to be quite disastrous. With series resonance, the resonance is controlled at fundamental frequency and hence no unwanted resonance occurs.

The development of series resonance circuit for testing purpose has been very widely welcome by the cable industry as they faced resonance problem with test transformer while testing short lengths of cables. In the initial stages, it was difficult to manufacture continuously variable high voltage and high value reactors to be used in the series circuit and therefore, indirect methods to achieve this objective were employed. Fig. 3.15 shows a continuously variable reactor connected in the low voltage winding of the step up transformer whose secondary is rated for the full test voltage. $C2$ represents the load capacitance. If N is the transformation ratio and L is the inductance on the low voltage side of the transformer, then it is reflected with $N2$ L value on the secondary side (load side) of the transformer. For certain setting of the reactor, the inductive reactance may equal the capacitive reactance of the circuit, hence resonance will take place.

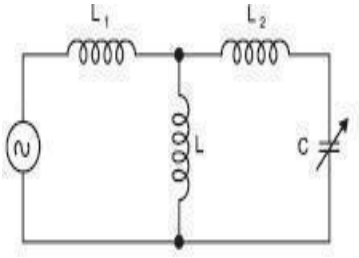

Figure: 3.13 Equivalent circuit of a single stage loaded transformer

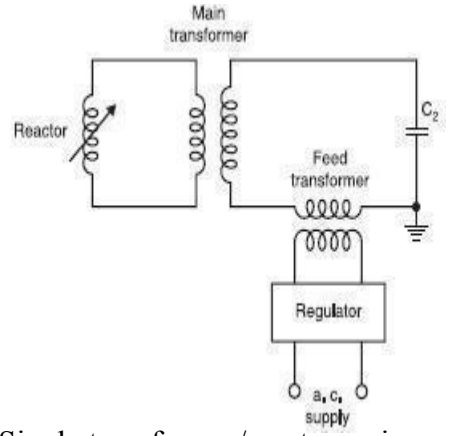

Figure: 3.14 Single transformer/reactor series resonance circuit

Thus, the reactive power requirement of the supply becomes zero and it has to supply only the losses of the circuit. However, the transformer has to carry the full load current on the high voltage side. This is a disadvantage of the method. The inductor are designed for high quality factors $Q = \omega L / R$. The feed transformer, therefore, injects the losses of the circuit only. It has now been possible to manufacture high voltage continuously variable reactors 300 kV per unit using a new technique with split iron core. With this, the testing step up transformer can be omitted as shown in Fig. 3.15. The inductance of these inductors can be varied over a wide range depend upon the capacitance of the load to produce resonance. Here R is usually of low value. After the resonance condition is achieved, the output voltage can be increased by increasing the input voltage. The feed transformers are rated for nominal current ratings of the reactor

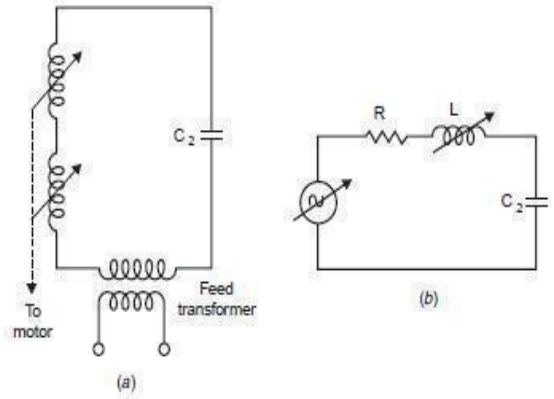

Figure: 3.15 (a) Series resonance circuit with variable h.t. reactors (b) Equivalent circuit of (a)Figure. 3.15 (b) represents an equivalent circuit for series resonance circuit.

Fig. 3.15 (b) represents an equivalent circuit for series resonance circuit. Here R is usually of low value. After the resonance condition is achieved, the output voltage can be increased by increasing the input voltage. The feed transformers are rated for nominal current ratings of the reactor. Under resonance, the output voltage will be

$$V_0 = \frac{V}{R}\frac{1}{\omega C_2}$$

$$\omega L = \frac{1}{\omega C_2}$$

Where V is the supply voltage.

Since at resonance

$$V_0 = \frac{V}{R}\omega L = VQ$$

$$\omega L = \frac{1}{\omega C_2}$$

Therefore $$V_0 = \frac{V}{R}\omega L = VQ$$

Where Q is the quality factor of the inductor which usually varies between 40 and 80. This means that with Q = 40, the output voltage is 40 times the supply voltage. It also means that the reactive power requirements of the load capacitance in kVA are 40 times the power to be provided by the feed transformer in KW. This results in a relatively small power rating for the feed transformer.

The following are the advantages of series resonance circuit.

- The power requirements in KW of the feed circuit are (kVA)/Q where kVA is the reactive
- Power requirements of the load and Q is the quality factor of variable reactor usually greaterthan 40. Hence, the requirement is very small.
- The series resonance circuit suppresses harmonics and interference to a large extent. The near sinusoidal wave helps accurate partial discharge of measurements and is also desirable for measuring loss angle and capacitance of insulating materials using Schering Bridge. In case of a flashover or breakdown of a test specimen during testing on high voltage side, the resonant circuit is detuned and the test voltage collapses immediately. The short circuit
- Current is limited by the reactance of the variable reactor. It has proved to be of great value as the weak part of the isolation of the specimen does not get destroyed. In fact, since the arc flash over has very small energy, it is easier to observe where exactly the flashover is occurring by delaying the tripping of supply and allowing the recurrence of flashover.
- No separate compensating reactors (just as we have in case of test transformers) are required. This results in a lower overall weight.
- When testing SF6 switchgear, multiple breakdowns do not result in high transients. Hence, no special protection against transients is required.

- Series or parallel connections of several units are not at all a problem. Any number of units can be connected in series without bothering for the impedance problem which is very severely associated with a cascaded test transformer. In case the test specimen requires large current for testing, units may be connected in parallel without any problem.

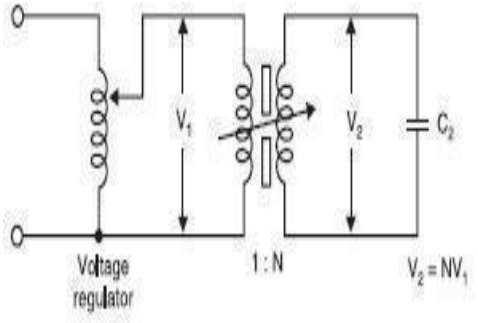

Figure: 3.16 Parallel resonance system

In an attempt to take advantage of both the methods of connections, i.e., series and parallel resonant systems, a third system employing series parallel connections was tried. This is basically a modification of a series resonant system to provide most of the characteristics of the parallel system. Fig. 3.17. Shows a schematic of a typical series parallel method.

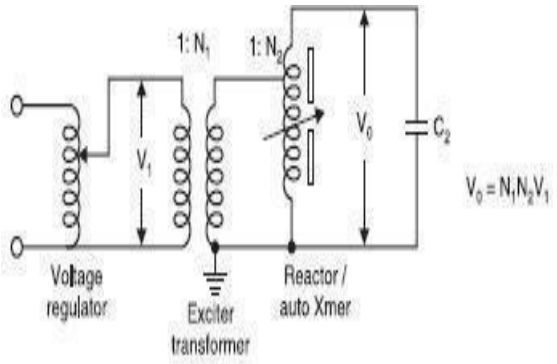

Figure: 3.17 Series-parallel resonant system

Here the output voltage is achieved by auto transformer action and parallel compensation is achieved by the connection of the reactor. It has been observed that during the process of tuning for most of the loads, there is a certain gap opening that will result in the parallel connected test system going into uncontrolled over voltage of the test sample and if the test set is allowed to operate for a long time, excessive heating and damage to the reactor would result. Also, it has been observed experimentally that complete balance of ampere turns takes place when the system operates under parallel resonance condition.

Under all other settings of the variable reactor, an unbalance in the ampere turns will force large leakage flux into the surrounding metallic tank and clamping structure which will cause large circulating currents resulting in hot spots which will affect adversely the dielectric strength of oil in the tank.

In view of the above considerations, it has been recommended not to go in for series-parallel resonant mode of operation for testing purpose. If a single stage system up to 300 kV using the resonance test voltage is required, parallel resonant system must be adopted. For test voltage exceeding 300 kV, the series resonant method is strongly recommended. The specific weight of a cascaded test transformer varies between 10 and 20 kg/kava where as for a series resonant circuit with variable high voltage reactors it lies between 3 and 6 kg/kava. circuit with variable frequency sources With the development of static frequency convertor, it has now been possible to reduce the specific weight still further. In order to obtain resonance in the circuit a choke of constant magnitude can be used and as the load capacitance changes the source frequency should be changed.

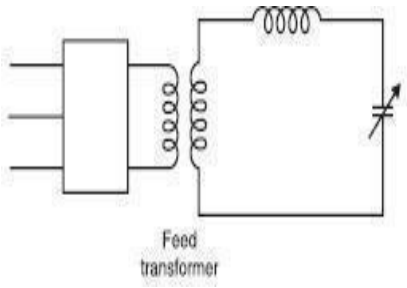

Figure: 3.18 Schematic diagram of series resonant

Fig. 3.18 shows a schematic diagram of a series resonant circuit with variable frequency source. The frequency convertor supplies the losses of the testing circuit only which are usually of the order of 3% of the reactive power of the load capacitor as the chokes can be designed for very high quality factors.

A word of caution is very important, here in regard to testing of test specimen having large capacitance. With a fixed reactance, the frequency for resonance will be small as compared to normal frequency. If the voltage applied is taken as the normal voltage the core of the feed transformer will get saturated as V/f then becomes large and the flux in the core will be large. So, a suitable voltage must be applied to avoid this situation with the static frequency convertor circuits the specific weight has come down to 0.5 kg/kVA. It is to be noted that whereas the series resonant systems are quite popular for testing cables and highly loss free capacitive loads, cascaded transformers are more common in high voltage laboratories for testing equipment in MV range and also for relatively high loads.

3.1.7 Impulse Voltages

As explained in detail in the above Chapter , disturbances of electric power transmission and distribution systems are frequently caused by two kinds of transient voltages whose amplitudes may greatly exceed the peak values of the normal a.c. operating voltage. The first kind are lightning overvoltage, originated by lightning stroke shitting the phase wires of overhead lines or the bus bars of outdoor substations. The amplitudes are very high, usually in the order of 1000 kV or more, as every stroke may inject lightning currents up to about 100 kA and even more into the transmission

line;_27_ each stroke is then followed by travelling waves, whose amplitude is often limited by the maximum insulation strength of the overhead line. The rate of voltage rise of such a travelling wave is at its origin directly proportional to the steepness of the lightning current, which may exceed 100 kA/μsec, and the voltage levels may simply be calculated by the current multiplied by the effective surge impedance of the line. Too high voltage levels are immediately chopped by the breakdown of the insulation and therefore travelling waves with steep wave fronts and even steeper wave tails may stress the insulation of power transformers or other h.v. equipment severely. Lightning protection systems, surge arresters and the different kinds of losses will damp and distort the travelling waves, and therefore lightning overvoltage's with very different wave shapes are present within the transmission system.

The second kind is caused by switching phenomena. Their amplitudes are always related to the operating voltage and the shape is influenced by the impedances of the system as well as by the switching conditions. The rate of voltage rise is usually slower, but it is well known that the wave shape can also be very dangerous to different insulation systems, especially to atmospheric air insulation in transmission systems with voltage levels higher than 245 kV. Both types of over voltages are also effective in the l V. distribution systems, where they are either produced by the usual, sometimes current-limiting, switches or where they have been transmitted from the h.v. distribution systems.

Here they may often cause a breakdown of electronic equipment, as they can reach amplitudes of several kilovolts, and it should be mentioned that the testing of certain l V. apparatus with transient voltages or currents is a need today. Such tests also involve 'electromagnetic compatibility (EMC) tests', which will not be discussed here. Although the actual shape of both kinds of overvoltage varies strongly, it became necessary to simulate these transient voltages by relatively simple means for testing purposes. The various national and international standards define the impulse voltages as a unidirectional voltage which rises more or less rapidly to a peak value and then decays relatively slowly to zero.

In the relevant IEC Standard 60, widely accepted today through national committees, a distinction is made between lightning and switching impulses, i.e. according to the origin of the transients. Impulse voltages with front duration's varying from less than one up to a few tens of microseconds are, in general, considered as lightning impulses. Figure 3.19(a) shows the shape for such a 'full' lightning impulse voltage as well as sketches for the same voltage chopped at the tail (Fig. 3.19(b)) or on the front (Fig. 3.19(c)), i.e. interrupted.

Tc: time to chopping. O1 : virtual origin disruptive discharge. Although the definitions are clearly indicated, it should be emphasized that the 'virtual origin' O1 is defined where the line AB cuts the time axis. The 'front time' T1, again a virtual parameter, is defined as 1.67times the interval T between the instants when the impulse is 30 per cent and90 per cent of the peak value for full or chopped lightning impulses. For front-chopped impulses the 'time to chopping' Tc is about equal to T1. The reason for defining the point A at 30 per cent voltage level can be found in most records of measured impulse voltages.

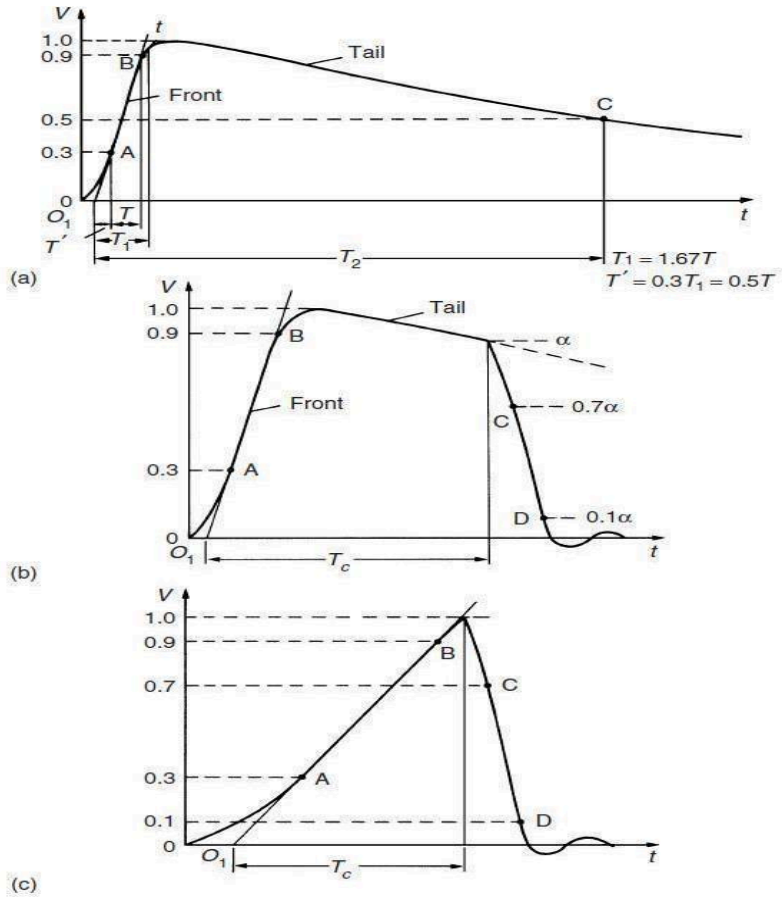

Figure: 3.19 General shape and definitions of lightning impulse (LI)voltages. (a) Full LI. (b) LI chopped on the tail. (c) LI chopped on the front.T1 : front time. T2 : time to half-value.

It is quite difficult to obtain a smooth slope within the first voltage rise, as the measuring systems as well as stray capacitances and inductances may cause oscillations. For most applications, the (virtual) front time T1 is 1.2 μs, and the (virtual) time to half-value T2 is 50 μs. In general the specifications permit a tolerance of up to 30 per cent for T1 and 20 per cent for T2. Such impulse voltages are referred to as a T1/T2 impulse, and therefore the 1.2/50 impulse is the accepted standard lightning impulse voltage today. Lightning impulses are therefore of very short duration, mainly if they are chopped on front. Due to inherent measurement errors and uncertain tie-in the evaluation the 'time parameters' T1, T2 and Tc or especially the time difference between the points C and D (Figs 3.19 (b) and (c)) can hardly be quantified with high accuracy.

Figure 3.20 illustrates the slope of a switching impulse. Whereas the time to half-value T2 is defined similarly as before, the time to peak Tp is the time interval between the actual origin and the instant when the voltage has reached its maximum value. This definition could be criticized, as it is difficult to establish the actual crest value with high accuracy. An additional parameter is therefore the time Td, the time at 90 per cent of crest value. The different definitions

in comparison to lightning impulses can be understood if the time scale is emphasized: the standard switching impulse has time parameters (including tolerances) and is therefore described as a 250/2500 impulse.

For fundamental investigations concerning the insulation strength of long air gaps or other apparatus, the time to peak has to be varied between about 100 and 1000 μs, as the breakdown strength of the insulation systems may be sensitive upon the voltage wave shape.

$$T_p = 250\,\mu s \pm 20\%$$
$$T_2 = 2500\,\mu s \pm 60\%$$

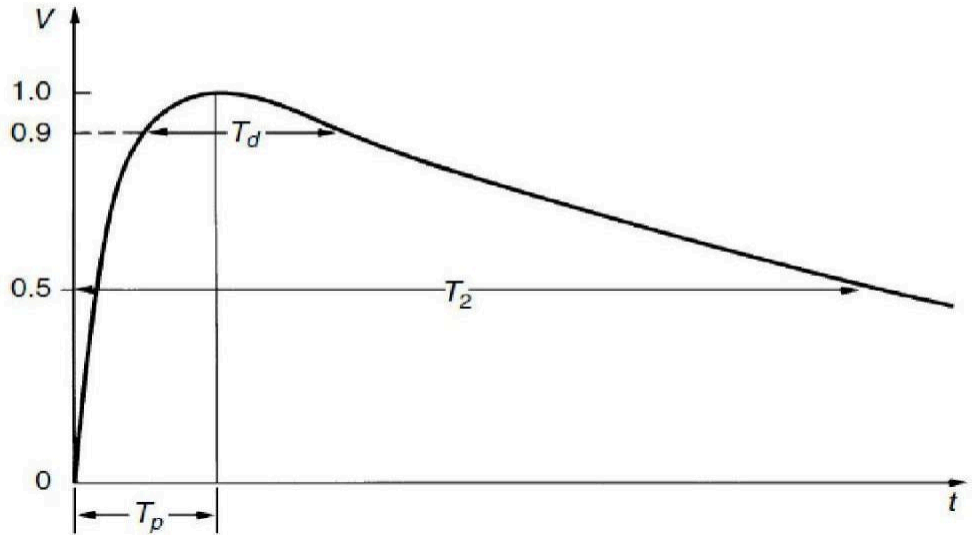

Figure: 3.20 General shape of switching impulse voltages. Tp: time to peak.T2 : time to half-value. Td: time above 90 per cent

Impulse voltage generator circuits

The introduction to the full impulse voltages as defined in the previous section leads to simple circuits for the generation of the necessary wave shapes. The rapid increase and slow decay can obviously be generated by discharging circuits with two energy storages, as the wave shape may well be composed by the superposition of two exponential functions.

Again the load of the generators will be primarily capacitive, as insulation systems are tested. This load will therefore contribute to the stored energy. A second source of energy could be provided by an inductance or additional capacitor. For lightning impulses mainly, a fast discharge of pure inductor is usually impossible, as h.v. chokes with high energy content can never be built without appreciable stray capacitances. Thus a suitable fast discharge circuit will always consist essentially of two capacitors.

Single-stage generator circuits Two basic circuits for single-stage impulse generators are shown in Fig. 3.21.The capacitor C1 is slowly charged from a dace. source until the spark gap Gbreaks down. This spark gap acts as a voltage-limiting and voltage-sensitive switch, whose ignition time (time to voltage breakdown) is very short in comparison to T1. As such single-stage generators may be used for charging voltages from some kV up to about 1 MV, the sphere gaps) will offer proper operating conditions.

An economic limit of the charging voltage V0 is, however, a value of about 200 to 250 kV, as too large diameters of the spheres would otherwise be required to avoid excessive in homogeneous field distributions between the spheres. The resistors R1, R2 and the capacitance C2 form the wave shaping network. R1 will primarily damp the circuit and control the front time T1. R2 will discharge the capacitors and therefore essentially control the wave tail.

The capacitance C2 represents the full load, i.e. the object under test as well as all other capacitive elements which are in parallel to the test object (measuring devices; additional load capacitor to avoid large variations of T1/T2, if the test objects are changed). No inductances are assumed so far, and are neglected in the first fundamental analysis, which is also necessary to understand multistage generators. In general this approximation is permissible, as the inductance of all circuit elements has to be kept as low as possible.

Within the ‘discharge’ capacitance C1. As C1 is always much larger than C2, this figure determines mainly the cost of a generator. For the analysis we may use the Laplace transform circuit sketched .which simulates the boundary condition, that for t 0 C1 is charged to V0 and for t > 0 this capacitor is directly connected to the wave shaping network. For the circuit Fig. 3.21(a) the output voltage is thus given by the expression.

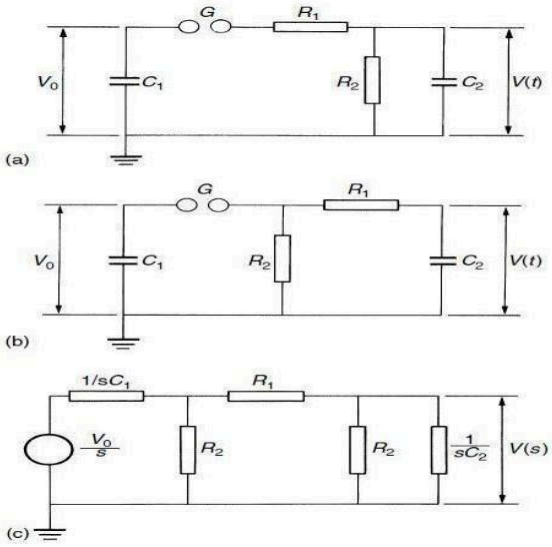

Figure: 3.21Single-stage impulse generator circuits (a) and (b). C1: discharge capacitance. C2 : load capacitance. R1 : front or damping resistance. R2 : discharge resistance. (c) Transform circuit Before starting the analysis, we should mention the most significant parameter of impulse generators. This is the maximum stored energy

$$W = \tfrac{1}{2}C_1(V_{0_{max}})^2$$

$$V(s) = \frac{V_0}{s}\frac{Z_2}{Z_1 + Z_2},$$

Where

$$Z_1 = \frac{1}{C_1 s} + R_1;$$
$$Z_2 = \frac{R_2/C_2 s}{R_2 + 1/C_2 s}.$$

Where

$$V(s) = \frac{V_0}{k}\frac{1}{s^2 + as + b}$$

where

$$a = \left(\frac{1}{R_1C_1} + \frac{1}{R_1C_2} + \frac{1}{R_2C_2}\right);$$
$$b = \left(\frac{1}{R_1R_2C_1C_2}\right);$$
$$k = R_1C_2.$$

For circuit Fig. 3.22 (b) one finds the same general expression eqn , with the following constants; however,

$$\left.\begin{aligned} a &= \left(\frac{1}{R_1C_1} + \frac{1}{R_1C_2} + \frac{1}{R_2C_1}\right); \\ b &= \left(\frac{1}{R_1R_2C_1C_2}\right); \\ k &= R_1C_2. \end{aligned}\right\} \text{ as above}$$

$$\alpha_1, \alpha_2 = \frac{a}{2} \mp \sqrt{\left(\frac{a}{2}\right)^2 - b}.$$

For both circuits, therefore, we obtain from the transform tables the same expression in the time domain:

$$V(t) = \frac{V_0}{k}\frac{1}{(\alpha_2 - \alpha_1)}[\exp(-\alpha_1 t) - \exp(-\alpha_2 t)]$$

Although one might assume that both circuits are equivalent, a larger difference may occur if the voltage efficiency, 5, is calculated. This efficiency is defined as

$$\eta = \frac{V_p}{V_0};$$

Vp being the peak value of the output voltage as indicated . Obviously this value is always

smaller than 1 or 100 per cent. It can be calculated by finding tmax from dVt/dt D0; this time for the voltage Vt to rise to its peak value is given by

$$t_{\max} = \frac{\ln(\alpha_2/\alpha_1)}{(\alpha_2 - \alpha_1)}.$$

Substituting this equation into eqn one may find

$$\eta = \frac{(\alpha_2/\alpha_1)^{-[(\alpha_2/\alpha_1 - \alpha_1)]} - (\alpha_2/\alpha_1)^{-[(\alpha_2/\alpha_2 - \alpha_1)]}}{k(\alpha_2 - \alpha_1)}.$$

$$R_1 = \frac{1}{2C_1}\left[\left(\frac{1}{\alpha_1} + \frac{1}{\alpha_2}\right) - \sqrt{\left(\frac{1}{\alpha_1} + \frac{1}{\alpha_2}\right)^2 - \frac{4(C_1 + C_2)}{\alpha_1\alpha_2 \cdot C_2}}\right].$$

$$R_2 = \frac{1}{2(C_1 + C_2)}\left[\left(\frac{1}{\alpha_1} + \frac{1}{\alpha_2}\right) + \sqrt{\left(\frac{1}{\alpha_1} + \frac{1}{\alpha_2}\right)^2 - \frac{4(C_1 + C_2)}{\alpha_1\alpha_2 C_2}}\right].$$

Circuit Fig. 2.25(b):

$$R_1 = \frac{1}{2C_2}\left[\left(\frac{1}{\alpha_1} + \frac{1}{\alpha_2}\right) - \sqrt{\left(\frac{1}{\alpha_1} + \frac{1}{\alpha_2}\right)^2 - \frac{4(C_1 + C_2)}{\alpha_1\alpha_2 C_1}}\right].$$

$$R_2 = \frac{1}{2(C_1 + C_2)}\left[\left(\frac{1}{\alpha_1} + \frac{1}{\alpha_2}\right) + \sqrt{\left(\frac{1}{\alpha_1} + \frac{1}{\alpha_2}\right)^2 - \frac{4(C_1 + C_2)}{\alpha_1\alpha_2 C_1}}\right].$$

All these equations contain the time constants 1/¸1 and 1/¸2, which depend upon the wave shape. There is, however, no simple relationship between these time constants and the times T1, T2 and Tp as defined in the national or international recommendations, i.e. in Figs 2.23 and 2.24. This relationship can be found by applying the definitions to the analytical expression for Vt,this means to equation. The relationship is irrational and must be computed numerically. The following table shows the result for some selected wave shapes: The standardized nominal values of T1 and T2 are difficult to achieve in practice, as even for fixed values of C1 the load C2 will vary and the exact values for R1 and R2 according to above equation in general not available.

These resistors have to be dimensioned for the rated high voltage of the generator and are accordingly expensive. The permissible tolerances forT1 and T2 are therefore necessary and used to graduate the resistor values. According of the real output voltage V(t) will in addition be necessary if the admissible impulse shape has to be testified. Another reason for such a measurement is related to the value of the test voltage as defined in the recommendations. This magnitude corresponds to the crest value, if the shape of the lightning impulse is smooth.

However, oscillations or an overshoot may occur at the crest of the impulse. If the frequency of such oscillations is not less than 0.5MHz or the duration of overshoot not over 1 sec, a ‘mean curve’ (see Note below) should be drawn through the curve. The maximum

amplitude of this 'mean curve' defines the value of the test voltage. Such a correction is only tolerated, provided their single peak amplitude is not larger than 5 per cent of the crest value.

Oscillation son the front of the impulse (below 50 per cent of the crest value) are tolerated, provided their single peak amplitude does not exceed 25 percent of the crest value.

It should be emphasized that these tolerances constitute the permitted differences between specified values and those actually recorded by measurements. Due to measuring errors the true values and the recorded ones may be somewhat different. Note. With the increasing application of transient or digital recorders in recording of impulse voltages it became very obvious that the definition of a 'mean curve' for the evaluation of lightning impulse parameters of waveforms with oscillations and/or overshoot, as provided by the standards, is insufficient. Any software, written to evaluate the parameters, needs clear instructions which are not yet available. As this matter is still under consideration (by CIGRE Working Group 33.03) and a revision of the current standards may provide solutions, no further comments to this problem are given. The origin of such oscillations or the overshoot can be found in measuring errors as well as by the inductances within every branch of the circuit or the stray capacitances, which will increase with the physical dimensions of the circuit.

As far as inductances are concerned, a general rule for the necessary critical damping of single-stage or – with less accuracy of multistage generators can easily be demonstrated . If individual inductances L1, L2 are considered within the discharge circuit as indicated in Fig. 3.22(a), a second order differential equation determines the output voltage across the load capacitance C2. However, such an equivalent circuit cannot be exact, as additional circuitsrelated to stray capacitances are not taken into account. Thus we may only combine the total inductance within the C1 –C2 circuit to single inductance L, as shown in Fig. 3.22 (b), and neglect the positions of the tail resistors, which have no big influence. This reduces the circuit to a simple damped series resonant circuit, and the critical resistance R D R1 for the circuit to beNon-oscillatory is given by the well-known equation

$$R_1 \cong R = 2\sqrt{\frac{L}{C}}$$

$$\frac{1}{C} = \frac{1}{C_1} + \frac{1}{C_2}$$

This equation is in general suitable for predicting the limiting values for the front resistor R1. The extremely tedious analytical analysis of circuits containing individual inductances is shown elsewhere. Computer programs for transients may also be used to find the origin of oscillations, although it is difficult to identify good equivalent circuits.

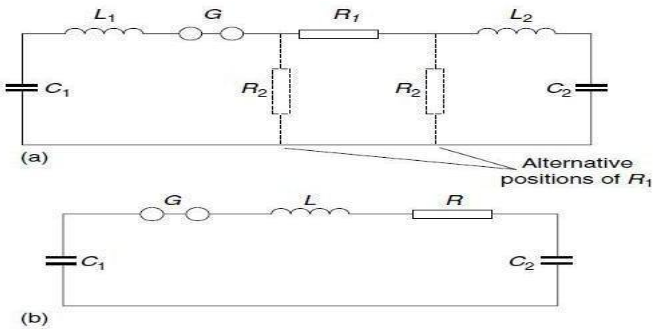

Figure: 3.22 Simplified circuit of impulse generator and load. Circuit showing alternative positions of the wave tail control resistance. (b) Circuit for calculation of wave front oscillations

3.1.8 Multistage impulse generator circuits

The difficulties encountered with spark gaps for the switching of very high voltages, the increase of the physical size of the circuit elements, the efforts Generation of high voltages 61necessary in obtaining high dace. voltages to charge C1 and, last but not least, the difficulties of suppressing corona discharges from the structure and leads during the charging period make the one-stage circuit inconvenient for higher voltages. In order to overcome these difficulties, in 1923 Marx35 suggested an arrangement where a number of condensers are charged in parallel through high ohmic resistances and then discharged in series through spark gaps. There are many different, although always similar, multistage circuits in use. To demonstrate the principle of operation, a typical circuit is presented in Fig. 3.23 which shows the connections of a six-stage generator. The dace. Voltage charges the equal stage capacitors C01 in parallel through the high value charging resistors R0 as well as through the discharge (and also charging).

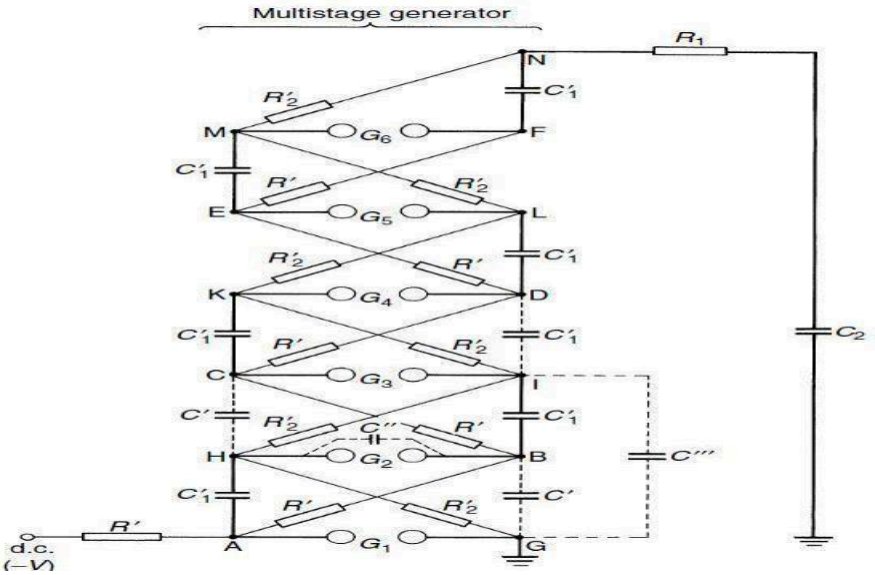

Figure: 3.23 Basic circuit of a six-stage impulse generator (Marx generator) resistances

R02 which are much smaller than the resistors R0 and are comparable with R2 in Fig. 3.25. At the end of the relatively long charging period(typically several seconds up to 1 minute), the points A, B, . . . ,F will be at the potential of the dace. source, e.g. _V with respect to earth, and the pointsG,H,, N will remain at the earth potential, as the voltage drop during charging across the resistors R02is negligible. The discharge or firing of the generator is initiated by the breakdown of the lowest gap G1 which is followed by a nearly simultaneous breakdown of all the remaining gaps. According to the traditional theory, which does not take into account the stray capacitances Indicated by the dotted lines, this rapid breakdown would be caused by high over voltages across the second and further gaps: when the first gap fires, the potential at point A changes rapidly from _V to zero, and thus the point H increases its potential to CV.

As the point B still would remain at the charging potential, _V, thus a voltage of 2V would appear across G2. This high overvoltage would therefore cause this gap to break down and the potential at point I would rise to C2V, creating a potential difference of 3V across gapG3, if again the potential at point C would remain at the charging potential.

This traditional interpretation, however, is wrong, since the potentials B and C can – neglecting stray capacitances – also follow the adjacent potentials of the points A and B, as the resistors R0 are between. We may only see up to now that this circuit will give an output voltage with a polarity opposite to that of the charging voltage. In practice, it has been noted that the gap G2 must be set to a gap distance only slightly greater than that at which G1 breaks down; otherwise it does not operate.

According to Edwards, Husbands and Perry_31_ for an adequate explanation one may assume the stray capacitances C0, C00 and C000 within the circuit. The capacitances C0 are formed by the electrical field between adjacent stages; C000 has a similar meaning across two stages. C00 is the capacitance of the spark gaps. If we assume now the resistors as open circuits, we may easily see that the potential at point B is more or less fixed by the relative magnitudes of the stray capacitances. Neglecting C0 between the points Hand C and taking into account that the discharge capacitors C01 are large in comparison to the stray capacitances, point B can be assumed as mid-point of a capacitor voltage divider formed by C00 and C0/C000. Thus the voltage rise of point A from _V to zero will cause the potential B to rise from V to a voltage of

$$V_B = -V + V\left(\frac{C''}{C' + C'' + C'''}\right) = -V\left(\frac{C' + C'''}{C' + C'' + C'''}\right)$$

Hence the potential difference across G_2 becomes

$$V_{G2} = +V - (-V_B) = V\left(1 + \frac{C' + C'''}{C' + C'' + C'''}\right).$$

If C00 equals zero, the voltage across G2 will reach its maximum value 2V.This gap capacitance, however, cannot be avoided. If the stage capacitancesC0 and C000 are both zero, VG2 will equal V, and a sparking of G2 would not be possible. It is apparent, therefore, that these stray capacitances enhance favorable conditions for the operation of the generator. In reality, the conditions set by the above equations are approximate only and are, of course, transient, as the stray capacitances start to discharge via the resistors. As the values of C0 to C000 are normally in the order of some 10 pF only, the time constants for this discharge may be as low as 10_7 to 10_8 sec. Thus the voltage across G2 appears for a short time and leads to breakdown within several tens of nanoseconds. Transient over voltages appear across the further gaps, enhanced also by the fact that the output terminal N remains at zero potential mainly, and therefore additional voltages are built up across the resistor R02. So the breakdown continues and finally the terminal N attains a voltage of C6V, or nV, if n stages are present.

The processes associated with the firing of such generators are even more sophisticated. They have been thoroughly analyzed and investigated experimentally.31,36,37_In practice for a consistent operation it is necessary to set the distance for the first gap G1 only slightly below the second and further gaps for earliest breakdown. It is also necessary to have the axes of the gaps in one vertical plane so that the ultraviolet illumination from the spark in the first gap irradiates the other gaps. This ensures a supply of electrons released from the gap to initiate breakdown during the short period when the gaps are subjected to the overvoltage.

If the first gap is not electronically triggered, the consistency of its firing and stability of breakdown and therefore output voltage is improved by providing ultraviolet illumination for the first gap. These remarks indicate only a small part of the problems involved with the construction of spark gaps and the layout of the generator. Before some of these additional problems are treated, we shall treat more realistic Marx circuits as used for the explanations so far.

In Fig. 3.24, the wave front control resistor R1 is placed between the generator and the load only. Such a single ‘external’ front resistor, however, has to withstand for a short time the full rated voltage and therefore is inconveniently long or may occupy much space. This disadvantage can be avoided if either a part of this resistance is distributed or if it is completely distributed within the generator. Such an arrangement is illustrated in Fig. 2.30, in which in addition the series connection of the capacitors C01 and gaps (as proposed originally byGoodlet_38_) is changed to an equivalent arrangement for which the polarity of the output voltage is the same as the charging voltage. The charging resistorsR0 are always large compared with the distributed resistors R01and R02, andR02is made as small as is necessary to give the required time to halve-valueT2. Adding the external front resistor R001 helps to damp oscillations otherwise

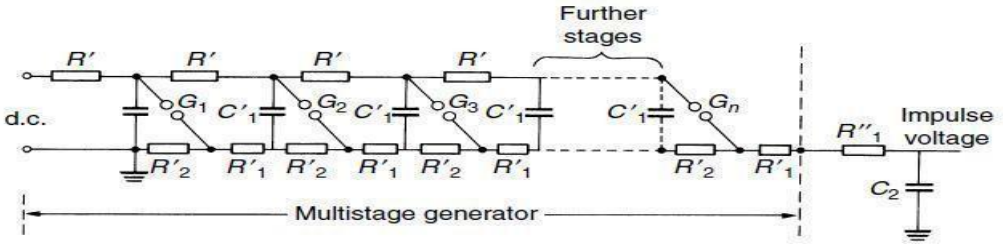

Figure: 3.24 Multistage impulse generator with distributed discharge and front resistors

R02: discharge resistors. R01: internal front resistors. R001: external front resistorexcited by the inductance and capacitance of the external leads between the generator and the load, if these leads are long. If the generator has fired, the total is charge capacitance C1 maybe calculated as where n is the number of stages. The consistent firing of such circuits could be explained as for the generator

$$\frac{1}{C_1} = \sum^{n} \frac{1}{C_1'};$$

the effective front resistance R_1 as

$$R_1 = R_1'' + \sum^{n} R_1';$$

and the effective discharge resistance R_2 – neglecting the charging resistances R' – as

$$R_2 = nR_2' = \sum^{n} R_2';$$

of Fig. 3.24. For both generator circuits, the firing is aggravated if the resistancesR02 have relatively low values. According to equations such low values appear with generators of high energy content and/or short times to half-value, T2. Then the time constant for discharging the stray capacitances to ground C000 (Fig. 3.24) will be too low and accordingly the overvoltage for triggering the upper stages too short. By additional means providing high resistance values within the firing period, this disadvantage can be avoided.

3.2 TRIPPING AND CONTROL OF IMPULSE GENERATORS

In large impulse generators, the spark gaps are generally sphere gaps or gaps formed by hemispherical electrodes. The gaps are arranged such that sparking of one gap results in automatic sparking of other gaps as overvoltage is impressed on the other. In order to have consistency in sparking, irradiation from an ultra-violet lamp is provided from the bottom to all the gaps. To trip the generator at a predetermined time, the spark gaps may be mounted one movable frame, and the gap distance is reduced by moving the movable electrodes closer.

This method is difficult and does not assure consistent and controlled tripping. A simple method of controlled tripping consists of making the first gap a three electrode gap and firing it from a controlled source. Figure 3.25 gives the schematic arrangement of a three electrode gap The first stage of the impulse generator is fitted with a three electrode gap, and the central electrode is maintained at a potential in-between that of the top and the bottom electrodes with the resistors R\ and RL. The tripping is initiated by applying a pulse to the thyratron G by closing the switch S. The capacitor C produces an exponentially decaying pulse of positive polarity the pulse goes and initiates the oscillograph time base. The thyratron conducts on

receiving thepulse from the switch S and produces a negative pulse through the capacitance Ci at the central electrode of the three electrode gap.

Hence, the voltage between the central electrode and the top electrode of the three electrode gap goes above its sparking potential and thus the gap conducts. The time lag required for the thyratron firing andbreakdown of the three electrode gap ensures that the sweep circuit of the oscillographbegins before the start of the impulse generator voltage. The resistance R^ ensures decoupling of voltage oscillations produced at the spark gap entering the oscilloscopethrough the common trip circuit. The three electrode gap requires larger space and an elaborate construction.Now-a-days a trigatron gap shown in Fig.3.26 is used, and this requires much smaller voltage for operation compared to the three electrode gap

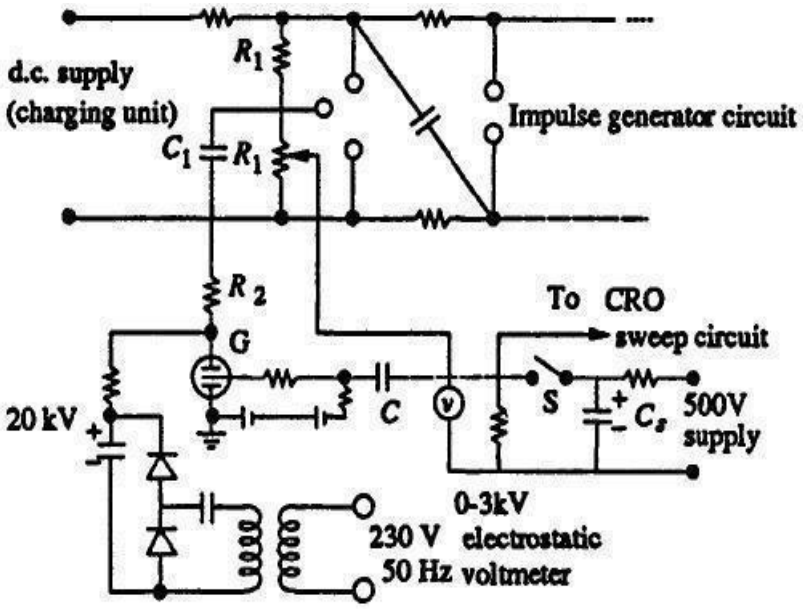

Figure: 3.25 Tripping of an impulse generator with a three electrode gap

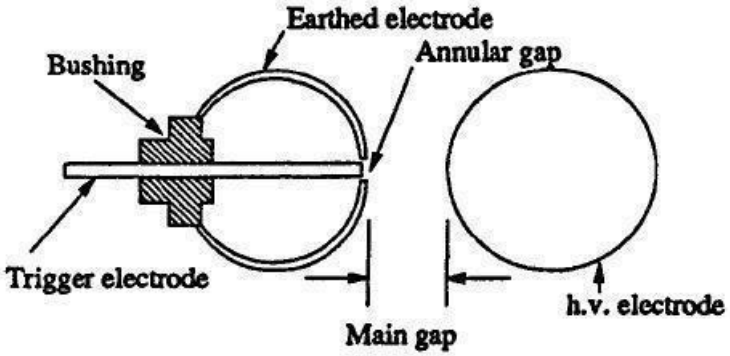

Figure:3.26 (a) Trigatron gap

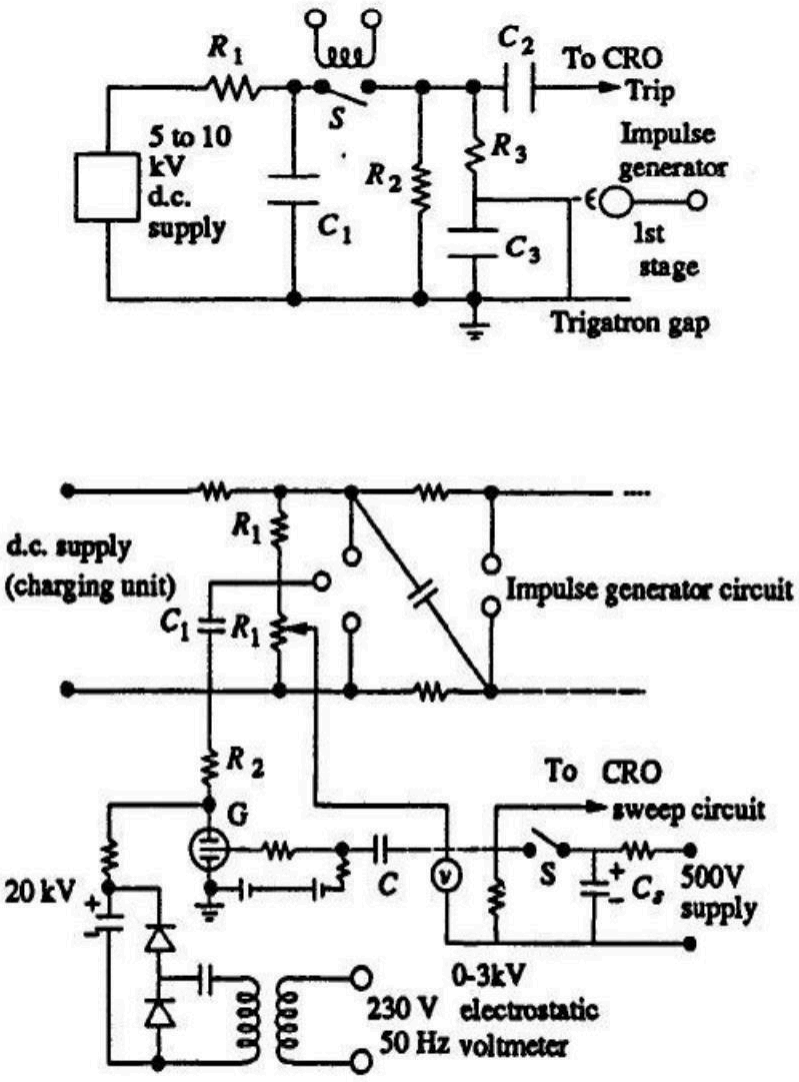

(b) Tripping circuit using a trigatron Figure:3.26

Trigatron gap and tripping circuit

A trigatron gap consists of high voltage spherical electrode of suitable size, an earthed main electrode of spherical shape, and a trigger electrode through the main electrode. The trigger electrode is a metal rod with an annular clearance of about 1 mm fitted into the main electrode through a bushing. The trigatron is connected to a pulse circuit as shown in fig. 3.26 b. Tripping of the impulse generator is effected by a trip pulse which produces a spark between the trigger electrode and the earthed sphere. Due to space charge effects and distortion of the field in the main gap, spark over of the main gap Fig. 3.27 applied for correct operation.

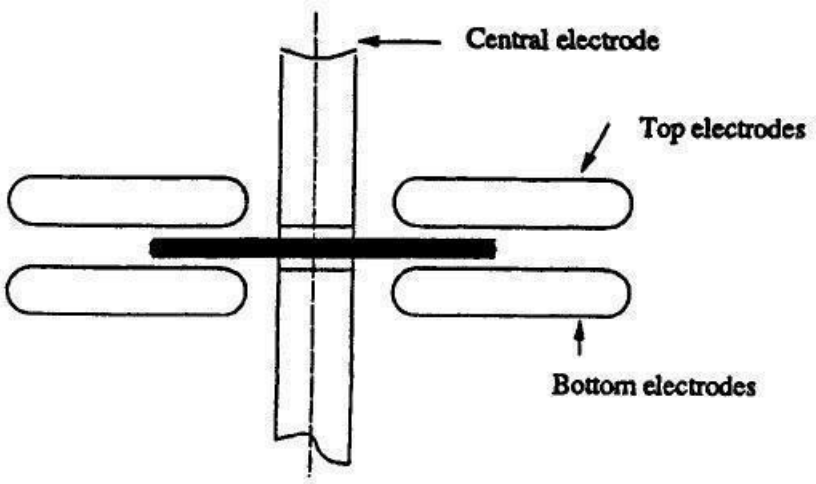

Figure: 3.27 Three electrode gap for high current switching

Three Electrode Gap for Impulse Current Generator

In the case of impulse current generators using three electrode gaps for tripping and control, a certain special design is needed. The electrodes have to carry high current from the capacitor bank. Secondly, the electrode has to switch large currents in a small duration of time (in about a microsecond). Therefore, the switch should have very low inductance. The erosion rate of the electrodes should be low. For high current capacitor banks, a number of spark gap switches connected in parallel as shown in Fig. 3.27 are often used to meet the requirement. Recently, trigatron gaps are being replaced by triggered vacuum gaps, the advantage of the latter being fast switching at high currents (> 100 kA) in a few nanoseconds. Triggering of the spark gaps by focused laser beams is also adopted since the performance is better than the conventional triggering methods.

UNIT – IV MEASUREMENT OF HIGH VOLTAGE AND HIGH CURRENTS

4.1 INTRODUCTION

Transient measurements have much in common with measurements of steady state quantities but the Short-lived nature of the transients which we are trying to record introduces special problems. Frequently the transient quantity to be measured is not recorded directly because of its large magnitudes e.g. when a shunt is used to measure current, we really measure the voltage across the shunt and then we assume that the voltage is proportional to the current, a fact which should not be taken for granted with transient currents. Often the voltage appearing across the shunt may be insufficient to drive the measuring device it requires amplification. On the other hand, if the voltage to be measured is too large to be measured with the usual meters, it must be attenuated. This suggests an idea of a measuring system rather than a measuring device. Measurements of high voltages and currents involve much more complex problems which a specialist in common electrical measurement does not have to face. The high voltage equipments have large stray capacitances with respect to the grounded structures and hence large voltage gradients are set up. A person handling these equipments and the measuring devices must be protected against these over voltages. For this, large structures are required to control the electrical fields and to avoid flash over between the equipment and the grounded structures. Sometimes, these structures are required to control heat dissipation within the circuits. Therefore, the location and layout of the equipments is very important to avoid these problems. Electromagnetic fields create problems in the measurements of impulse voltages and currents and should be minimized. The chapter is devoted to describing various devices and circuits for measurement of high voltages and currents. The application of the device to the type of voltages and currents is also discussed.

4.1.1 Uniform Field Spark Gaps

Bruce suggested the use of uniform field spark gaps for the measurements of a.c., d.c and impulse voltages. These gaps provide accuracy to within 0.2% for a.c. voltage measurements an appreciable improvement as compared with the equivalent sphere gap arrangement.

Fig. 4.1 shows a half-contour of one electrode having plane sparking surfaces with edges of gradually increasing curvature

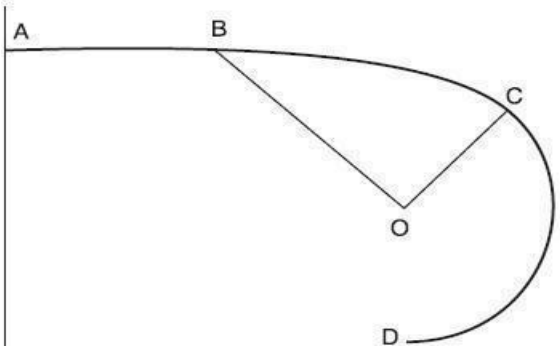

Figure: 4.1 Half contour of uniform spark gap

The portion AB is flat, the total diameter of the flat portion being greater than the maximum spacing between the electrodes. The portion BC consists of a sine curve based on the axes OB and OC and given by XY = CO sin (BX/BO . π/2). CD is an arc of a circle with centre at O.Bruce showed that the breakdown voltage V of a gap of length S cms in air at 20°C and 760 mmHg. Pressure is within 0.2 per cent of the value given by the empirical relation.

$$V = 24.22S + 6.08\sqrt{S}$$

This is a great advantage, that is, if the spacing between the spheres for breakdown is known the breakdown voltage can be calculated.

The other advantages of uniform field spark gaps are

(i) No influence of nearby earthed objects

(ii) No polarity effect.

However, the disadvantages are

(i) Very accurate mechanical finish of the electrode is required.

(ii) Careful parallel alignment of the two electrodes.

(iii) Influence of dust brings in erratic breakdown of the gap.

This is much more serious in these gaps as compared with sphere gaps as the highly stressed electrode areas become much larger. Therefore, a uniform field gap is normally not used for voltage measurements.

4.1.2 Rod Gaps

A rod gap may be used to measure the peak value of power frequency and impulse voltages. The gap usually consists of two 1.27 cm square rod electrodes square in section at their end and are mounted on insulating stands so that a length of rod equal to or greater than one half of the gap spacing overhangs the inner edge of the support. The breakdown voltages as found in American standards for different gap lengths at 25° C, 760 mm Hg. pressure and with water vapour pressure of 15.5 mm Hg. are reproduced here.

Table 4.1

Gap Length in Cms.	Breakdown Voltage KV Peak	Gap Length in Cms.	Breakdown Voltage KV Peak
2	26	80	435
4	47	90	488
6	62	100	537
8	72	120	642
10	81	140	744
15	102	160	847
20	124	180	950
25	147	200	1054
30	172	220	1160

The breakdown voltage is a rod gap increases more or less linearly with increasing relative air density over the normal variations in atmospheric pressure. Also, the breakdown voltage increases with increasing relative humidity, the standard humidity being taken as 15.5 mm Hg. Because of the large variation in breakdown voltage for the same spacing and the uncertainties associated with the influence of humidity, rod gaps are no longer used for measurement of a.c. or impulse voltages. However, more recent investigations have shown that these rods can be used for d.c measurement provided certain regulations regarding the electrode configurations are observed. The arrangement consists of two hemi spherically capped rods of about 20 mm diameter as shown in Fig. 4.3.1.

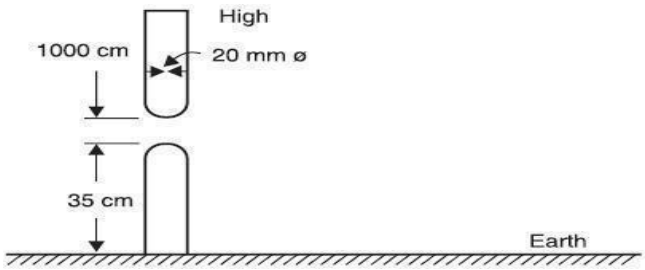

Figure: 4.2 Electrode arrangements for a rod gap to measure HVDC

The earthed electrode must be long enough to initiate positive breakdown streamers if the high voltage rod is the cathode. With this arrangement, the breakdown voltage will always be initiated by positive streamers for both the polarities thus giving a very small variation and being humidity dependent. Except for low voltages (less than 120 kV), where the accuracy is low, the breakdown voltage can be given by the empirical relation.

$$V = \delta(A + BS)4\sqrt{5.1 \times 10^{-2}(h + 8.65)}KV \quad \square \quad (4.1)$$

Where h is the absolute humidity in gm/m3 and varies between 4 and 20 gm/m3 in the above

relation. The breakdown voltage is linearly related with the gap spacing and the slope of the relation B

= 5.1 kV/cm and is found to be independent of the polarity of voltage. However constant A is polarity dependent and has the values

A= 20 Kv for

positive Polarity = 15 Kv

for negative polarity

The accuracy of the above relation is better than ±20% and, therefore, provides better accuracy even as compared to a sphere gap.

4.1.3 Electrostatic Voltmeter

The electric field according to Coulomb is the field of forces. The electric field is produced by voltage and, therefore, if the field force could be measured, the voltage can also be measured. Whenever a voltage is applied to a parallel plate electrode arrangement, an electric field is set up between the plates. It is possible to have uniform electric field between the plates with suitable arrangement of the plates. The field is uniform, normal to the two plates and directed towards the negative plate. If A is the area of the plate and E is the electric field intensity between the plates ε the permittivity of the medium between the plates, we know that the energy density of the electric field between the plates is given as,

$$w_d = \frac{1}{2} \in E^2$$

(4.2)

Consider a differential volume between the plates and parallel to the plates with area A and thickness dx, the energy content in this differential volume Adx i

$$dw = w_d A dx = \frac{1}{2} \in E^2 A dx$$

(4.3)

Now force F between the plates is defined as the derivative of stored electric energy along the field direction i.e.,

$$F = \frac{dw}{dx} = \frac{1}{2} \in E^2 A$$

(4.4)

Now E = V/d where V is the voltage to be measured and d the distance of separation between the plates. Therefore, the expression for force

$$F = \frac{1}{2} \in \frac{V^2 A}{d^2}$$

(4.5)

Since the two plates are oppositely charged, there is always force of attraction between the plates. If the voltage is time dependant, the force developed is also time dependant. In such a case the mean value of force is used to measure the voltage. ThusElectrostatic voltmeters

measure the force based on the above equations and are arranged such that one of the plates is rigidly fixed whereas the

$$F = \frac{1}{T}\int_0^T F(t)dt = \frac{1}{T}\int \frac{1}{2} \in \frac{V^2}{d^2} A\, dt = \frac{1}{2}\frac{\epsilon A}{d^2} . \frac{1}{T}\int V^2(t)dt = \frac{1}{2} \in A \frac{V_{rms}^2}{d^2} \quad (4.6)$$

other is allowed to move. With this the electric field gets disturbed. For this reason, the movable electrode is allowed to move by not more than a fraction of

a millimeter to a few millimeters even for high voltages so that the change in electric field is negligibly small. As the force is proportional to square of Vrms, the meter can be used both for a.c. and d.c voltage measurement.

The force developed between the plates is sufficient to be used to measure the voltage. Various designs of the voltmeter have been developed which differ in the construction of electrode arrangement and in the use of different methods of restoring forces required to balance the electrostatic force of attraction. Some of the methods are

- Suspension of moving electrode on one arm of a balance.
- Suspension of the moving electrode on a spring.
- Pendulous suspension of the moving electrode.
- Torsional suspension of moving electrode.

The small movement is generally transmitted and amplified by electrical or optical methods. If the electrode movement is minimized and the field distribution can exactly be calculated, the meter can be used for absolute voltage measurement as the calibration can be made in terms of the fundamental quantities of length and force. From the expression for the force, it is clear that for a given voltage to be measured, the higher the force, the greater is the precision that can be obtained with the meter. In order to achieve higher force for a given voltage, the area of the plates should be large, the spacing between the plates (d) should be small and some dielectric medium other than air should be used in between the plates.

If uniformity of electric field is to be maintained an increase in area A must be accompanied by an increase in the area of the surrounding guard ring and of the opposing plate and the electrode may, therefore, become unduly large especially for higher voltages. Similarly the gap length cannot be made very small as this is limited by the breakdown strength of the dielectric medium between the plates. If air is used as the medium, gradients upto5 kV/cm has been found satisfactory. For higher gradients vacuum or SF6gas has been used. The greatest advantage of the electrostatic voltmeter is its extremely low loading effect as only electric fields are required to be set up. Because of high resistance of the medium between the plates, the active power loss is negligibly small. The voltage source loading is, therefore, limited only to their active power required to charge the instrument capacitance which can be as low as a few pico farads for low voltage voltmeters.

The measuring system as such does not put any upper limit on the frequency of supply to be measured. However, as the load inductance and the measuring system capacitance form a series resonance circuit, a limit is imposed on the frequency range. For low range voltmeters, the upper frequency is generally limited to a few MHz. Fig. 4.4 shows a schematic diagram of an absolute electrostatic voltmeter. The hemispherical metal dome D encloses a sensitive balance B which measures the force of attraction between the movable disc which hangs from one of its arms and the lower plate P. The movable electrode M hangs with a clearance of above 0.01 cm, in a central opening in the upper plate which serves as a guard ring. The diameter of each of the plates is 1 metre. Light reflected from a mirror carried by the balance beam serves to magnify its motion and to indicate to the operator at a safe distance when a condition of equilibrium is reached. As the spacing between the two electrodes is large (about

100 cms for a voltage of about 300 kV), the uniformity of the electric field is maintained by the guard rings G which surround the space between the discs M and P. The guard rings G are maintained at a constant potential in space by a capacitance divider ensuring a uniform spatial potential distribution. When voltages in the range10 to 100 kV are measured, the accuracy is of the order of 0.01 per cent. Hueter has used a pair of spheres of 100 cms diameter for the measurement of high voltages utilizing the electrostatic attractive force between them. The spheres are arranged with a vertical axis and at spacing slightly greater than the sparking distance for the particular voltage to be measured. The upper high voltage sphere is supported on a spring and the extension of spring caused by the electrostatic force is magnified by a lamp-mirror scale arrangement. An accuracy of 0.5 per cent has been achieved by the arrangement.

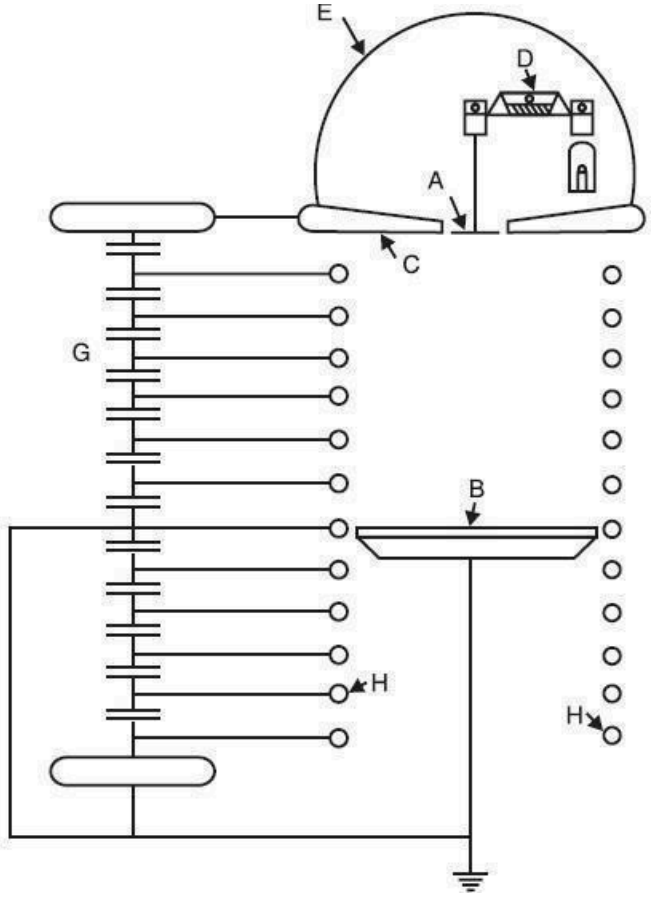

Figure: 4.3 Schematic diagram of electrostatic voltmeter

Electrostatic voltmeters using compressed gas as the insulating medium have been developed. Here for a given voltage the shorter gap length enables the required uniformity of the field to be maintained with electrodes of smaller size and a more compact system can be evolved. One such voltmeter using SF6 gas has been used which can measure voltages upto 1000 kV and accuracy is of the order of 0.1%. The high voltage electrode and earthed plane provide uniform electric field within the region of a 5 cm diameter disc set in a 65 cm diameter guard plane. A weighing balance arrangement is used to allow a large damping mass. The gap length can be varied between 2.5, 5 and10 cms and due to maximum working electric stress of 100 kV/cm, the voltage ranges can be selected to 250 kV, 500 kV and 100 kV. With 100 kV/cm as

gradient, the average force on the disc is found to be0.8681 N equivalent to 88.52 gm wt. The disc movements are kept as small as 1 μm by the weighing balance arrangement. The voltmeters are used for the measurement of high a.c. and d.c voltages. The measurement of voltages lower than about 50 volt is, however, not possible, as the forces become too small.

4.1.4 Peak Voltmeters with Potential Dividers

Passive circuits are not very frequently used these days for measurement of the peak value of a.c. or impulse voltages. The development of fully integrated operational amplifiers and other electronic circuits has made it possible to sample and hold such voltages and thus make measurements and, therefore, have replaced the conventional passive circuits. However, it is to be noted that if the passive circuits are designed properly, they provide simplicity and adequate accuracy and hence a small description ofthese circuits is in order. Passive circuits are cheap, reliable and have a high order of electromagnetic compatibility. However, in contrast, the most sophisticated electronic instruments are costlier and their electromagnetic compatibility (EMC) is low. The passive circuits cannot measure high voltages directly and use potential dividers preferably of the capacitance type. Fig. 4.4.1 shows a simple peak voltmeter circuit consisting of a capacitor voltage divider which reduces the voltage V to be measured to a low voltage Vm.

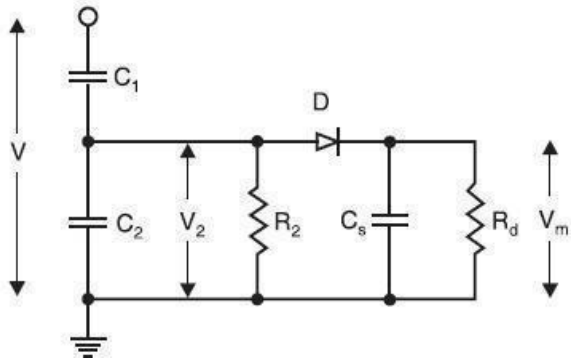

Figure: 4.4 Peak voltmeter

Suppose R2 and Rd are not present and the supply voltage is V. The voltage across the storage capacitor Cs will be equal to the peak value of voltage across C2 assuming voltage drop across the diode to be negligibly small. The voltage could be measured by an electrostatic voltmeter or other suitable voltmeters with very high input impedance. If the reverse current through the diode is very small and the discharge time constant of the storage capacitor very large, the storage capacitor will not discharge significantly for a long time and hence it will hold the voltage to its value for a long time. If now, V is decreased, the voltage V2 decreases proportionately and since now the voltage across C2 is smaller than the voltage across Cs to which it is already charged, therefore, the diode does not conduct and the voltage across Cs does not follow the voltage across C2. Hence, a discharge resistor Rd must be introduced into the circuit so that the voltage across Cs follows the voltage across C2. From measurement point of view it is desirable that the quantity to be measured should be indicated by the meter within a few seconds and hence Rd is so chosen that $R_d C_s \approx 1$ sec. As a result of this, following errors are introduced. With the connection of Rd, the voltage across Cs will decrease continuously even when the input voltage is kept constant. Also, it will discharge the capacitor C2 and the mean

potential of V2 (t) will gain a negative d.c component. Hence a leakage resistor R2 must be inserted in parallel with C2 to equalize these unipolar discharge currents. The second error corresponds to the voltage shape across the storage capacitor which contains ripple and is due to the discharge of the capacitor Cs. If the input impedance of the measuring device is very high, the ripple is independent of the meter being used. The error is approximately proportional to the ripple factor and is thus frequency dependent as the discharge time constant cannot be changed. If RdCs = 1 sec, the discharge error amounts to 1% for 50 Hz and 0.33% for 150 Hz. The third source of error is related to this discharge error. During the conduction time (when the voltage across Cs is lower than that across C2 because of discharge of Cs through Rd) of the diode the storage capacitor Cs is recharged to the peak value and thus Cs becomes parallel with C2. If discharge error is ed, recharge error er is given by

$$e_r = 2e_d \frac{c_s}{c_1+c_2+c_s}$$ (4.7)

Hence Cs should be small as compared withC2 to keep down the recharge error. It has also been observed that in order to keep the overall error to a low value, it is desirable to have a high value of R2. The same effect can be obtained by providing an equalizing arm to the low voltage arm of the voltage divider as shown in Fig. 4.4.2 This is accomplished by the addition of a second network comprising diode, Cs and Rd for negative polarity currents to the circuit shown in Fig.4.4.3 With this, the d.c currents in both branches are opposite in polarity and equalize each other. The errors due to R2 are thus eliminated. Rabus developed another circuit shown in Fig. 4.4.4 to reduce errors due to resistances. Two storage capacitors are connected by a resistor Rs within every branch and both are discharged by only one resistance Rd.

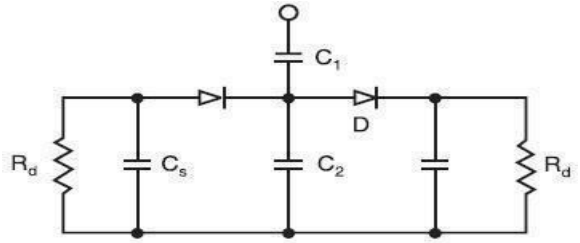

Figure: 4.5 Modified peak voltmeter circuit

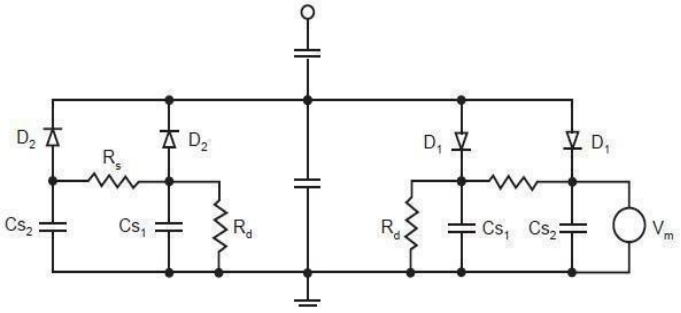

Figure: 4.6 Two-way booster circuit designed by Rabus

Here because of the presence of Rs, the discharge of the storage capacitor C_{s2} is delayed and hence the inherent discharge error is reduced. However, since these are two storage capacitors within one branch, they would draw more charge from the capacitor C_2 and hence the recharge error would increase. It is, therefore, a matter of designing various elements in the circuit so that the total sum of all the errors is a minimum. It has been observed that with the commonly used circuit elements in the voltage dividers, the error can be kept to well within about 1% even for frequencies below 20 Hz. The capacitor C_1 has to withstand high voltage to be measured and is always placed within the test area whereas the low voltage arm C_2 including the peak circuit and instrument form a measuring unit located in the control area. Hence a coaxial cable is always required to connect the two areas. The cable capacitance comes parallel with the capacitance C_2 which is usually changed in steps if the voltage to be measured is changed. A change of the length of the cable would, thus, also require recalibration of the system. The sheath of the coaxial cable picks up the electrostatic fields and thus prevents the penetration of this field to the core of the conductor. Also, even though transient magnetic fields will penetrate into the core of the cable, no appreciable voltage (extraneous of noise) is induced due to the symmetrical arrangement and hence a coaxial cable provides a good connection between the two areas. Whenever, a discharge takes place at the high voltage end of capacitor C_1 to the cable connection where the current looks into a change in impedance a high voltage of short duration may be built up at the low voltage end of the capacitor C_1 which must be limited by using an over voltage protection device (protection gap). These devices will also prevent complete damage of the measuring circuit if the insulation of C_1 fails.

4.1.5 Impulse Voltage Measurements Using Voltage Dividers

If the amplitudes of the impulse voltage is not high and is in the range of a few kilovolts, it is possible to measure them even when these are of short duration by using CROS. However, if the voltages to be measured are of high magnitude of the order of megavolts which normally is the case for testing and research purposes, various problems arise. The voltage dividers required are of special design and need a thorough understanding of the interaction present in these voltage dividing systems. The voltage generator G is connected to a test object—T through a lead L.

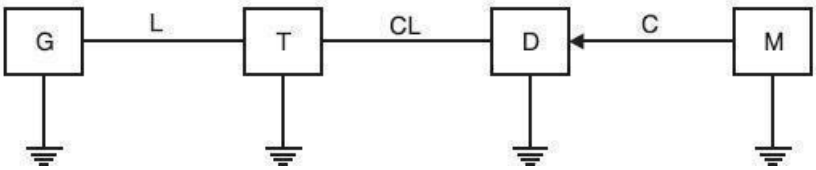

Figure: 4.7 Basic voltage testing circuit

These three elements form a voltage generating system. The lead L consists of a lead wire and a resistance to damp oscillation or to limit short-circuit currents if of the test object fails. The measuring system starts at the terminals of the test object and consists of a connecting lead CL to the voltage divider D. The output of the divider is fed to the measuring instrument (CRO etc.) M. The appropriate ground return should assure low voltage drops for even highly transient phenomena and keep the ground potential of zero as far as possible.

It is to be noted that the test object is a predominantly capacitive element and thus this forms an Oscillatory circuit with the inductance of the load. These oscillations are likely to be excited by any steep voltage rise from the generator output, but will only partly be detected by the voltage divider. A resistor in series with the connecting leads damps out these oscillations. The voltage divider should always be connected outside the generator circuit towards the load circuit (Test object) for accurate measurement. In case it is connected within the generator circuit and the test object discharges (chopped wave) the whole generator including voltage divider will be discharged by this short circuit at the test object and thus the voltage divider is loaded by the voltage drop across the lead L. As a result, the voltage measurement will be wrong. Yet for another reason, the voltage divider should be located away from the generator circuit. The dividers cannot be shielded against external fields. All objects in the vicinity of the divider which may acquire transient potentials during a test will disturb the field distribution and thus the divider performance. Therefore, the connecting lead CL is an integral part of the potential divider circuit. In order to avoid electromagnetic interference between the measuring instrument M and C the high voltage test area, the length of the delay cable should be adequately chosen. Very short length of the cable can be used only if the measuring instrument has high level of electromagnetic compatibility (EMC). For any type of voltage to be measured, the cable should be co-axial type. The outer conductor provides a shield against the electrostatic field and thus prevents the penetration of this field to the inner conductor. Even though, the transient magnetic fields will penetrate into the cable, no appreciable voltage is induced due to the symmetrical arrangement. Ordinary coaxial cables with braided shields may well be used for d.c. and a.c. voltages. However, for impulse voltage measurement double shielded cables with predominantly two insulated braided shields will be used for better accuracy.

During disruption of test object, very heavy transient current flow and hence the potential of the Ground may rise to dangerously high values if proper earthling is not provided. For this, large metal sheets of highly conducting material such as copper or aluminum are used. Most of the modern high voltage laboratories provide such ground return along with a Faraday Cage for a complete shielding of the laboratory. Expanded metal sheets give similar performance. At least metal tapes of large width should be used to reduce the impedance.

Voltages dividers for a.c., d.c. or impulse voltages may consist of resistors or capacitors or a convenient combination of these elements. Inductors are normally not used as voltage dividing elements as pure inductances of proper magnitudes without stray capacitance cannot be built and also these inductances would otherwise form oscillatory circuit with the inherent capacitance of the test object and this may lead to inaccuracy in measurement and high voltages in the measuring circuit. The height of a voltage divider depends upon the flash over voltage and this follows from the rated maximum voltage applied.

Now, the potential distribution may not be uniform and hence the height also depends upon the design of the high voltage electrode, the top electrode. For voltages in the megavolt range, the height of the divider becomes large. As a thumb rule following clearances between top

electrode and ground may be assumed 2.5 to 3 meters/MV for d.c. voltages.2 to 2.5 m/MV for lightning impulse voltages. More than 5 m/MV rms for a.c. voltages. More than 4 m/MV for switching impulse voltage.The potential divider is most simply represented by two impedances Z1 and Z2 connected in series and the sample voltage required for measurement is taken from across Z2, FIG. 4.8.If the voltage to be measured is V1 and sampled voltage V2, then

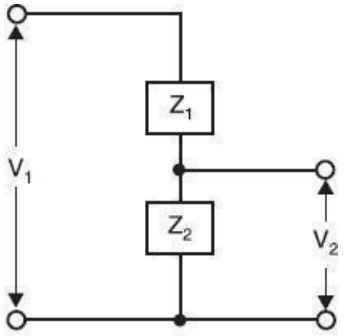

Figure: 4.8 Basic diagram of a potential divider circuit

$$V2 = \frac{Z2}{Z1+Z2} V1 \quad \square$$

(4.8) If the impedances are pure resistances $\square$

$$V2 = \frac{R2}{R1+R2} V1$$

impedances are pure (4.9) If the $\square$ resistances

$$V2 = \frac{C1}{C1+C2} V1 \qquad (4.10)$$

The voltage V2 is normally only a few hundred volts and hence the value of Z2 is so chosen that V2 across it gives sufficient deflection on a CRO. Therefore, most of the voltage drop is available across the impedance Z1 and since the voltage to be measured is in megavolt the length of Z1 is large which result in inaccurate measurements because of the stray capacitances associated with long length voltage dividers (especially with impulse voltage measurements) unless special precautions are taken. On the low voltage side of the potential dividers where a screened cable of finite length has to be employed for connection to the oscillograph other errors and distortion of wave shape can also occur.

4.2 CRO FORIMPULSE VOLTAGE AND CURRENT MEASUREMENT

The coupling impedance *Zm* is a parallel combination of *R*, *L* and *C* whose quality factor is low.The complex impedance *Zm* is given as

$$\frac{1}{Z_m} = \frac{1}{R} + \frac{1}{j\omega L} + j\omega C$$

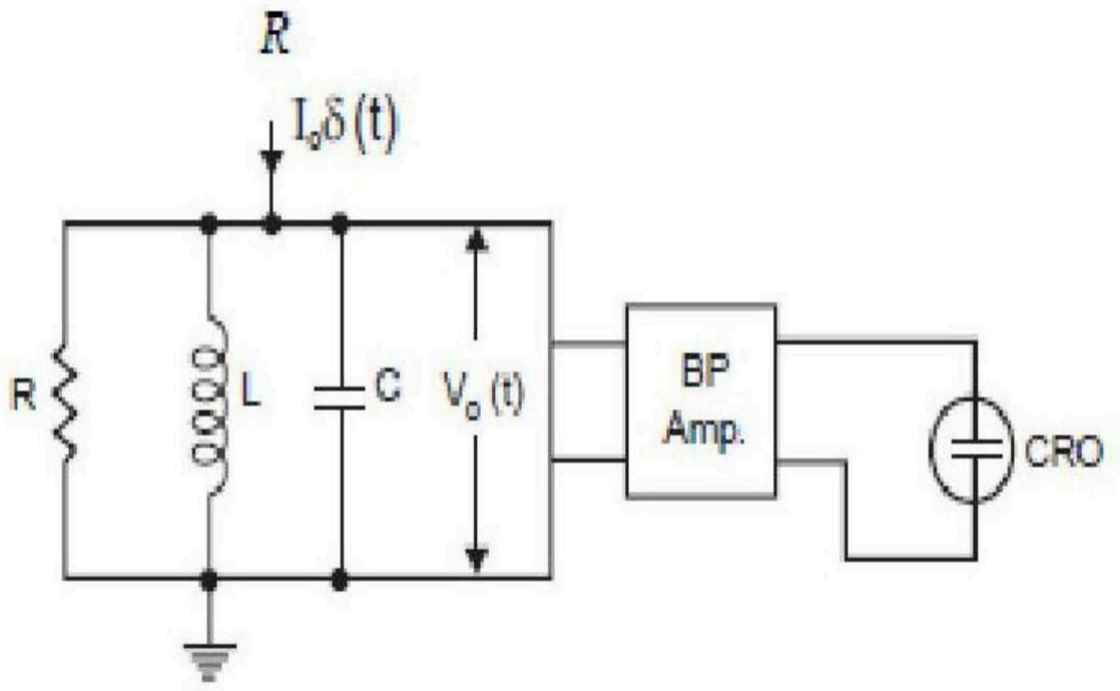

Figure: 4.9 CRO for impulse voltage and current measurement

The measuring impedance Zm is the impedance of a band pass filter which suppresses harmonic currents depending upon the selected circuit quality factor Q, below and above the resonance frequencyf0 i.e., Zm will suppress all frequency currents below and above its resonance frequency. The alternate is– 20 dB per decade if Q = 1 and can be greatly increased. Also, the measuring circuit Zm performs integration of the PD pulse currents i (t) = I0 δ (t).The above equation shows a damped oscillatory output voltage where amplitude is proportional to the charge q. The charge due to the pulse i(t) is actually stored by the capacitor C instantaneously but due to the presence of inductance and resistance, Oscillations are produced. If these oscillations are not damped, the resolution time of the filter will be large and proper integration will not take place especiallyof the subsequent current pulses. There is a possibility of over lapping and the results obtainedwill be erroneous. The resolution time as is said earlier should be smaller than the time constant τ of thecurrent pulse [i (t) $I0e$-t/τ].The resolution time or decay time depends upon the Q-factor and resonancefrequency $f0$ of the measuring impedance Zm. Let $Q = 1 = R/\ LC$. The voltage $v0(t)$ as shown in Fig. 6.28 can be obtained by writing nodal equation.

$$\frac{V_0(s)}{R}+\frac{V_0(s)}{sL}+V_0(s)\,Cs=I_0$$

$$V_0(s)=\frac{RsLI_0}{RLCs^2+sL+R}=\frac{I_0s/C}{s^2+\frac{s}{RC}+\frac{1}{LC}}$$

$$=\frac{I_0s/C}{\left(s+\frac{1}{2RC}\right)^2+\frac{1}{LC}-\frac{1}{(4R^2C^2)}}=\frac{I_0s/C}{(s+\alpha)^2+\beta^2}$$

where $\alpha=\frac{1}{2RC}$ and $\beta=\sqrt{\frac{1}{LC}-\alpha^2}$

Therefore, $V_0(s)=\frac{q}{C}\cdot\left[\frac{s}{(s+\alpha)^2+\beta^2}\right]$

$$V_0(s)=\frac{q}{C}\frac{s}{(s+\alpha)^2+\beta^2}=\frac{q}{C}\left[\frac{s+\alpha}{(s+\alpha)^2+\beta^2}-\frac{\alpha}{(s+\alpha)^2+\beta^2}\right]$$

$$=\frac{q}{C}\left[\frac{s+\alpha}{(s+\alpha)^2+\beta^2}-\frac{\alpha}{\beta}\cdot\frac{\beta}{(s+\alpha)^2+\beta^2}\right]$$

$$=\frac{q}{C}\left[e^{-\alpha t}\cos\beta t-\frac{\alpha}{\beta}e^{-\alpha t}\sin\beta t\right]$$

$$=\frac{q}{C}e^{-\alpha t}\left[\cos\beta t-\frac{\alpha}{\beta}\sin\beta t\right]$$

The resolution time is about 10 μ sec and for higher values of *Q*, *T* will be still larger. The resonance frequency is also affected by the coupling capacitance *Ck* and the capacitance *Ct* of the test specimen as these contribute to the formation of *C*. Therefore, the *R L C* circuit should be chosen or selected according to the test specimen so that a desired resonance frequency is obtained. The desired central frequency *f*0 or a band width around *f*0 is decided by the band pass amplifier connected to this resonant circuit

These amplifiers are designed for typically lower and upper cut off frequencies (– 3 *dB*) between 150 kHz and 100 kHz. This band of frequency is chosen as it is much higher than thepower supply frequency and also the frequency which are not used by broadcasting stations. There solution time becomes less than 10 μ sec. and hence proper integration of the current pulse is made possible. However, the main job of the amplifier is to increase the sensitivity of the whole measuring system. The time dependency of the output voltage *v*0 (*t*) can be seen on the oscilloscope. In the usual ellipse representation, the individual pulse *v*0 (*t*) are practically only recognizable on vertical lines of different heights as one rotation of the ellipse corresponds to one period of the supply system 20 m sec. for 50 Hz and 16.7 m sec. for 60 Hz supplies.

The magnitude of the individual discharge is quantified by comparing the pulse crest value with the one obtained from the calibration circuit as shown in Fig. 6.30. The calibration circuit consists of a voltage step generator $V0$ and a series capacitor $C0$. The charge q is simulated with no normal voltage applied to the PD testing circuit. It is possible to suggest the location of the partial discharges in an insulating material by looking at the display on the CRO screen.

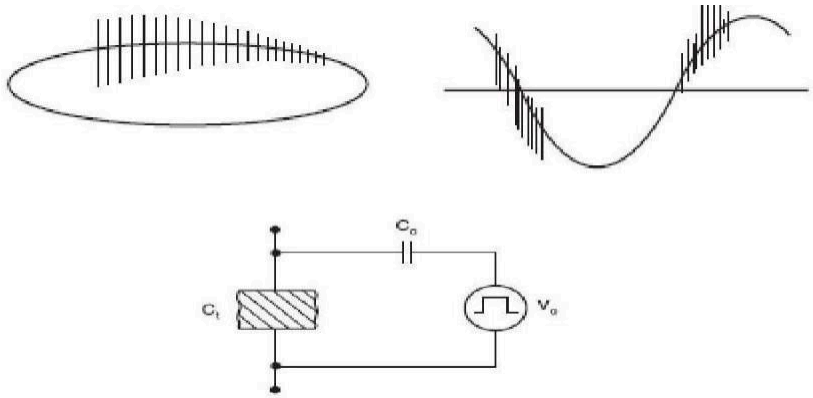

Figure:4.10 Circuit for calibration of the oscilloscope

4.3 DIGITAL TECHNIQUES IN HIGH VOLTAGE MEASUREMENT

4.3.1 Resistance Potential Dividers

The resistance potential dividers are the first to appear because of their simplicity of construction, less space requirements, less weight and easy portability. These can be placed near the test object which might not always be confined to one location.

The length of the divider depends upon two or three factors. The maximum voltage to be measured is the first and if height is a limitation, the length can be based on a surface flash over gradient in the order of 3–4 kV/cm irrespective of whether the resistance R1 is of liquid or wire wound construction. The length also depends upon the resistance value but this is implicitly bound up with the stray capacitance of the resistance column, the product of the two (RC) giving a time constant the value of which must not exceed the duration of the wave front it is required to record. It is to be noted with caution that the resistance of the potential divider should be matched to the equivalent resistance of a given generator to obtain a given wave shape. FIG. 4.11 (a) shows a common form of resistance potential divider used for testing purposes where the wave front time of the wave is less than 1 micro sec.

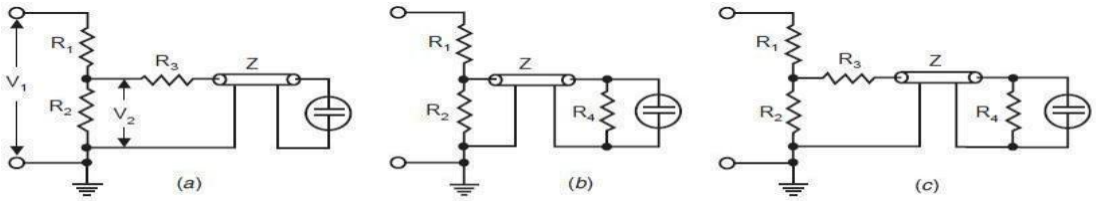

Figure: 4.11 various forms of resistance potential dividers recording circuits (a) Matching at

divider end (b) Matching at Oscillo graph end (c) Matching at both ends of delay cable Here

R_3, the resistance at the divider end of the delay cable is chosen such that $R_2 + R_3 = Z$ which puts an upper limit on R_2 i.e., $R_2 < Z$. In fact, sometimes the condition for matching is given as

$$Z = R3 + \frac{R1R2}{R1+R2}$$

(4.11)

But, since usually $R_1 >> R_2$, the above relation reduces to $Z = R_3 + R_2$. From Fig. 4.19 (a), the voltage appearing across R2 is

(4.12)

of the cable being represented by an impedance Z to ground.

Now

(4.13)

$$V2 = \frac{(Z+R3)R2}{2Z}\frac{V1}{Z1+R1}$$

(4.14)

$$V3 = \frac{V2}{Z+R3}Z = \frac{Z}{Z+R3}\frac{(Z+R3)R2}{2Z}.\frac{V1}{Z1+R1} = V1\frac{R2}{2(Z1+R1)}$$

(4.15) However, the voltage entering the delay cable is

(4.16)

As this voltage wave reaches the CRO end of the delay cable, it suffers reflections as theimpedance offered by the CRO is infinite and as a result the voltage wave transmitted into the

CRO is doubled. The CRO, therefore, records a voltage The reflected wave, however, as it reaches the low voltage arm of the potential divider does not suffer any reflection as $Z = R_2 + R_3$ and is totally absorbed by $(R_2 + R_3)$. Since R_2 is smaller than Z and Z_1 is a parallel combination of R_2 and $(R_3 + Z)$, Z_1 is going to be smaller than R_2 and since $R_1 > > R_2$, R_1 will be much greater than Z_1 and, therefore to a first approximation $Z_1 + R_1 \approx R_1$.

Therefore,

$$V_3' = \frac{R_2}{R_1} V_1 \approx \frac{R_2}{R_1+R_2} V_1 \text{ as } R_2 << R_1 \quad \square \tag{4.17}$$

Fig. 4.11 (b) and (c) are the variants of the potential divider circuit of Fig. 4.11 (a). The

cable Matching is done by a pure ohmic resistance R4 = Z at the end of the delay cable and, therefore, the voltage reflection coefficient is zero i.e. the voltage at the end of the cable is transmitted completely into R4 and hence appears across the CRO plates without being reflected.

As the input impedance of the delay cable is R4 = Z, this resistance is a parallel to

R2 and forms an integral part of the divider's low voltage arm. The voltage of such a divider is, therefore, calculated as follows: Equivalent impedance

$$R1 + \frac{R2Z}{RZ+Z} = \frac{R1(R2+Z)+R2Z}{(R2+Z)}$$

(4.18)

Therefore, Current

$$I = \frac{V1(R2+Z)}{R1(R2+Z)+R2Z}$$

(4.19)

and voltage

$$V2 = \frac{IR2Z}{R2+Z} = \frac{V1(R2+Z)}{R1(R2+Z)+R2Z}\frac{R2Z}{R2+Z}$$

$$= \frac{R2Z}{R1(R2+Z)+R2Z}V1 \qquad (4.20)$$

(4.21)

or voltage ratio

$$\frac{V2}{V1} = \frac{R2Z}{R1(R2+Z)+R2Z}$$

(4.22)

Due to the matching at the CRO end of the delay cable, the voltage does not suffer any reflection at that end and the voltage recorded by the CRO is given as

Normally for undistorted wave shape through the cable (4.23)

$$V2 = \frac{R2}{2R1+R2}V1$$

For a given applied voltage V1 this arrangement will produce a smaller deflection on the CRO Plates as compared to the one in Fig. 4.19 (a).The arrangement of Fig. 4.19 (c) provides for matching at both ends of the delay cable and is to be recommended where it is felt necessary to reduce to the minimum irregularities produced in the delay cable circuit. Since matching is provided at the CRO end of the delay cable, therefore, there is no reflection of the voltage at that end and the voltage recorded will be half of that recorded in the arrangement of Fig. 4.19 (a) viz

$$V2 = \frac{R2}{2(R1+R2)} V1 \quad \square \tag{4.25}$$

It is desirable to enclose the low voltage resistance (s) of the potential dividers in a metal screening box. Steel sheet is a suitable material for this box which could be provided with a

detachable closefitting lid for easy access. If there are two low voltage resistors at the divider position as in Fig. 4.11 (a) and (c), they should be contained in the screening box, as close together as possible, with a removable metallic partition between them. The partition serves two purposes (i) it acts as an electrostatic shield between the two resistors (ii) it facilitates the changing of the resistors. The lengths of the leads should be short so that practically no inductance is contributed by these leads. The screening box should be fitted with a large earthling terminal. Fig. 4.12 shows a sketched cross-section of possible layout for the low voltage arm of voltage divider.

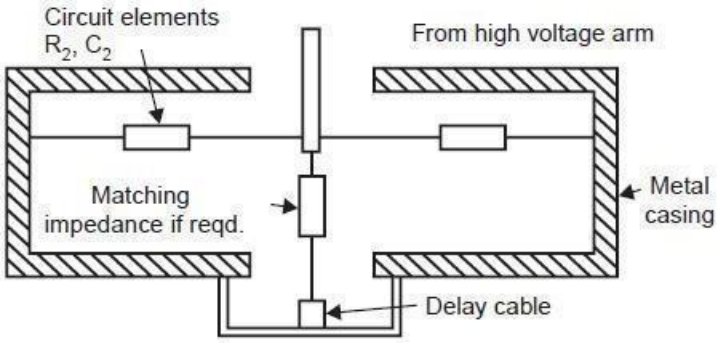

Figure: 4.12 Cross-section of low voltage arm of a voltage divider

4.3.2 Capacitance Potential Dividers

Capacitance potential dividers are more complex than the resistance type. For measurement of impulse voltages not exceeding 1 MV capacitance dividers can be both portable and transportable. In general, for measurement of 1 MV and over, the capacitance divider is a laboratory fixture. The capacitance dividers are usually made of capacitor units mounted one above the other and bolted together. It is this failure which makes the small dividers portable. A screening box similar to that described earlier can be used for housing both the low voltage capacitor unit C2 and the matching resistor if required.

The low voltage capacitor C2 should be non-inductive. A form of capacitor which has given excellent results is of mica and tin foil plate, construction, each foil having connecting tags coming out at opposite corners. This ensures that the current cannot pass from the high voltage circuit to the delay cable without actually going through the foil electrodes. It is also important that the coupling between the high and low voltage arms of the divider be purely capacitive. Hence, the low voltage arm should contain one capacitor only; two or more capacitors in parallel must be avoided because of appreciable inductance that would thus be introduced. Further, the tappings to the delay cable must be taken off as close as possible to the terminals of C2. Fig. 4.21 shows variants of capacitance potential dividers.

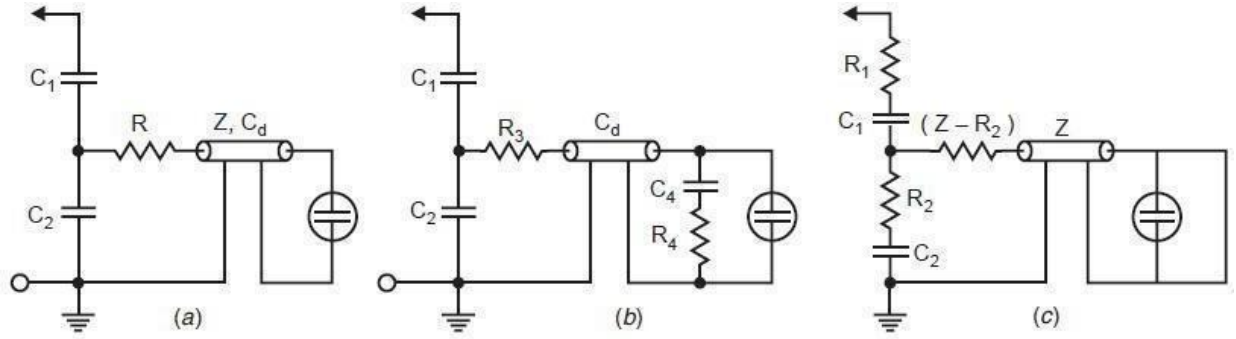

Figure: 4.13 Capacitor dividers (a) Simple matching (b) Compensated matching(c) Damped capacitor divider simple matching For voltage dividers in FIG. (b) and (c), the delay cable cannot be matched at its end.

A low Resistor in parallel to C2 would load the low voltage arm of the divider too heavily and decrease the output voltage with time. Since R and Z form a potential divider and R = Z, the voltage input to the cable will be half of the voltage across the capacitor C2. This halved voltages travels towards the open end of the cable (CRO end) and gets doubled after reflection. That is, the voltage recorded by the CRO is equal to the voltage across the capacitor C2. The reflected wave charges the cable to its final voltage magnitude and is absorbed by R (i.e. reflection takes place at R and since R = Z, the wave is completely absorbed as coefficient of voltage reflection is zero) as the capacitor C2 acts as a short circuit for high frequency waves. The transformation ratio, therefore, changes from the value:

$$\frac{C_1 + C_2}{C_1}$$

for very high frequencies to the value

$$\frac{C_1 + C_2 + C_d}{C_1}$$

for low frequencies.

However, the capacitance of the delay cable Cd is usually small as compared with C2.For capacitive divider an additional damping resistance is usually connected in the lead on the High voltage side as shown in FIG. 4.14 (c). The performance of the divider can be improved if damping resistor which corresponds to the a periodic limiting case is inserted in series with the individual element of capacitor divider. This kind of damped capacitive divider acts for high frequencies as a resistive divider and for low frequencies as a capacitive divider. It can, therefore, be used over a wide range of frequencies i.e. for impulse voltages of very different duration and also for alternating voltages.

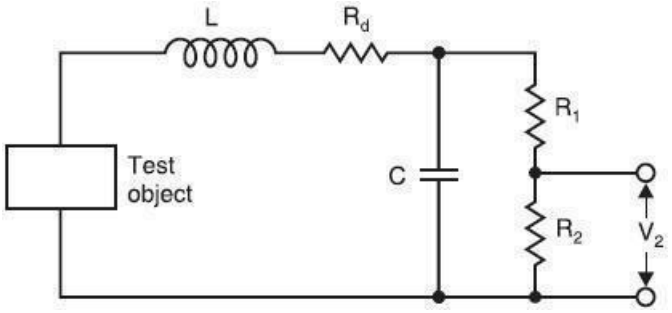

Figure: 4.14 Simplified diagram of a resistance potential divider

Fig. 4.22 shows a simplified diagram of a resistance potential divider after taking into Considerations the lead in connection as the inductance and the stray capacitance as lumped capacitance. Here L represents the loop inductance of the lead-in connection for the high voltage arm. The damping resistance Rd limits the transient overshoot in the circuit formed by test object, L, Rd and C. Its value has a decided effect on the performance of the divider. In order to evaluate the voltage transformation of the divider, the low voltage arm voltage V2 resulting from a square wave impulse V1 on the hv side must be investigated. The voltage V2 follows curve 2 in Fig. 4.15 (a) in case of a periodic damping and curve 2in Fig. 4.15 (b) in case of sub-critical damping. The total area between curves 1 and 2 taking into consideration the polarity is described as the response time.

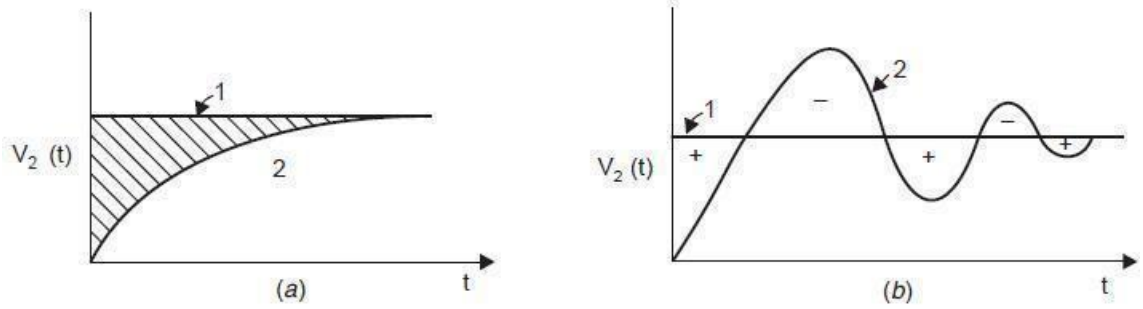

Figure: 4.15 the response of resistance voltage divider

With subcritical damping, even though the response time is smaller, the damping should not be Very small. This is because an undesirable resonance may occur for a certain frequency within the passing frequency band of the divider. A compromise must therefore be realized between the short rise time and the rapid stabilization of the measuring system. According to IEC publication No. 60 a maximum overshoot of 3% is allowed for the full impulse wave, 5% for an impulse wave chopped on the front at times shorter than 1 micro sec. In order to fulfill these requirements, the response time of the divider must not exceed 0.2 micro sec. for full impulse waves 1.2/50 or 1.2/5 or impulse waves chopped on the tail. If the impulse wave is chopped on the front at time shorter than 1 micro sec the response time must be not greater than 5% of the time to chopping.

4.3.3 Klydonograph or Surge Recorder

Since lightning surges are infrequent and random in nature, it is necessary to install a large number of recording devices to obtain a reasonable amount of data regarding these surges produced on transmission lines and other equipments. Some fairly simple devices have been developed for this purpose.

Klydonograph is one such device which makes use of the patterns known as Lichtenberg Figure which are produced on a photographic film by surface corona discharges. The Klydonograph (Fig. 4.16) consists of a rounded electrode resting upon the emulsion side of a photographic film or plate which is kept on the smooth surface of an insulating material plate backed by a plate electrode. The minimum critical voltage to produce a Figure is about 2 kV and the maximum Voltage that can be recorded is about 20 kV, as at higher voltages spark over's occurs which spoils the film. The device can be used with a potential divider to measure higher voltages and with a resistance shunt to measure impulse current. There are characteristic differences between the Figure for positive and negative voltages. However, for either polarity the radius of the Figure (if it is symmetrical) or the maximum distance from the centre of the Figure to its outside edge (if it is unsymmetrical) is a function only of the applied voltage. The oscillatory voltages produce superimposed effects for each part of the wave. Thus it is possible to know whether the wave is unidirectional or oscillatory. Since the size of the Figure for positive polarity is larger, it is preferable to use positive polarity Figure. This is particularly desirable in case of measurement of surges on transmission lines or other such equipment which are ordinarily operating on a.c. voltage and the alternating voltage gives a black band along the centre of the film caused by superposition of positive and negative Figure produced on each half cycle.

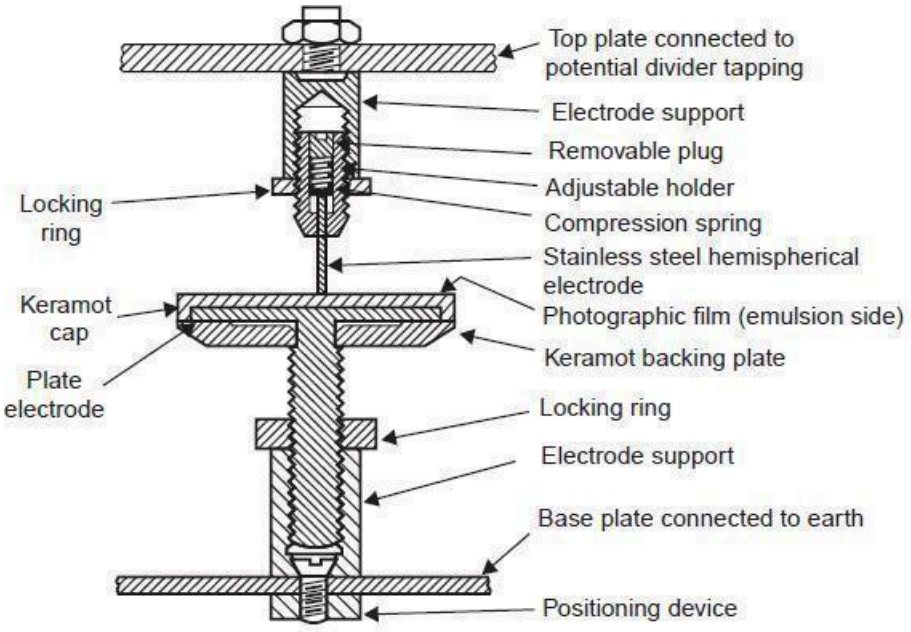

Figure: 4.16 Klydonograph

For each surge voltage it is possible to obtain both positive and negative polarity Figure by connecting pairs of electrodes in parallel, one pair with a high voltage point and an earthed plate and the other pair with a high voltage plate and an earthed point.

Klydonograph being a simple and inexpensive device, a large number of elements can be used.

UNIT-V HIGH VOLTAGE TESTING OF ELECTRICAL POWER APPARATUS

5.1 INTRODUCTION

Man has been power hungry since time-immemorial. In modern times the world has seen phenomenal increase in demand for energy, of which an important component is that of electrical energy. The production of electrical energy in big plants under the most economic condition makes it necessary that more and more energy be transported over longer and longer distances. Therefore, transmission at extra high voltages and the erection of systems which may extend over whole continents has become the most urgent problems to be solved in the near future. The very fast development of systems is followed by studies of equipment and the service conditions they have to fulfill. These conditions will also determine the values for testing at alternating, impulse and d.c. voltages under specific conditions. As we go for higher and higher operating voltages (say above 1000 kV) certain problems are associated with the testing techniques. Some of these are:

- Dimension of high voltage test laboratories.
- Characteristics of equipment for such laboratories.
- Some special aspects of the test techniques at extra high voltages.

The dimensions of laboratories for test equipments of 750 kV and above are fixed by the following main considerations:

- Figures (values) of test voltages under different conditions.
- Sizes of the test of equipments in a.c., d.c. and impulse voltages.

Distances between the objects under high voltage during the test period and the earthed surroundings such as floors, walls and roofs of the buildings. The problems associated with the characteristics of the equipments used for testing are summarized here. In alternating voltage system, a careful choice of the characteristics of the testing transformer is essential. It is known that the flash over voltage of the insulator in air or in any insulating fluid depends upon the capacitance of the supply system. This is due to the fact that a voltage drop may not maintain preliminary discharges or breakdown. It is, therefore, suggested that a capacitance of at least 1000 Pf must be connected across the insulator to obtain the correct flash over or puncture voltage and also under breakdown condition (a virtual short circuit) the supply system should be able to supply at least1 amp for clean and 5 amp for polluted insulators at the test voltage. There are some difficult problems with impulse testing equipments also especially when testing large power transformers or large reactors or large cables operating at very high voltages. The equivalent capacitance of the impulse generator is usually about 40 nano farads independent of

the operating voltage which gives a stored energy of about 1/2 × 40 10–9 × 36 × 109 = 720 KJ for 6 MV generators which is required for testing equipments operating at 150 kV. It is not at all difficult to pile up a large number of capacitances to charge them in parallel and then discharge in series to obtain a desired impulse wave.

But the difficulty exists in reducing the internal reactance of the circuit so that a shortwave front with minimum oscillation can be obtained. For example for a 4 MV circuit the inductance of the circuit is about 140 μH and it is impossible to test an equipment with a capacitance of 5000 pF with a front time of 1.2 μ sec. and less than 5% overshoot on the wave front. Cascaded rectifiers are used for high voltage d.c. testing. A careful consideration is necessary when test on polluted insulation is to be performed which requires currents of 50 to 200 mA but extremely predischarge streamer of 0.5 to 1 amp during milliseconds occur. The generator must have an internal reactance in order to maintain the test voltage without too high a voltage drop.

5.1.1 Testing Of Overhead Line Insulators

Various types of overhead line insulators are (i) Pin type (ii) Post type (iii) String insulator unit(iv) Suspension insulator string (v) Tension insulator.

Arrangement of Insulators for Test String insulator unit should be hung by a suspension eye from an earthed metal cross arm. The test voltage is applied between the cross arm and the conductor hung vertically down from the metal part on the lower side of the insulator unit.

Suspension string with all its accessories as in service should be hung from an earthed metal Cross arm. The length of the cross arm should be at least 1.5 times the length of the string being tested and should be at least equal to 0.9 m on either side of the axis of the string. No other earthed object should be nearer to the insulator string then 0.9 m or 1.5 times the length of the string whichever is greater. A conductor of actual size to be used in service or of diameter not less than 1 cm and length 1.5times the length of the string is secured in the suspension clamp and should lie in a horizontal plane.

The test voltage is applied between the conductor and the cross arm and connection from the impulse generator is made with a length of wire to one end of the conductor. For higher operating voltages where the length of the string is large, it is advisable to sacrifice the length of the conductor as stipulated above. Instead, it is desirable to bend the ends of the conductor over in a large radius. For tension insulators the arrangement is more or less same as in suspension insulator except that it should be held in an approximately horizontal position under a suitable tension (about 1000 Kg.).For testing pin insulators or line post insulators, these should be mounted on the insulator pin or line post shank with which they are to be used in service. The pin or the shank should be fixed in a vertical position to a horizontal earthed metal cross arm situated 0.9 m above the floor of the laboratory.

A conductor of 1 cm diameter is to be laid horizontally in the top groove of the insulator and secured by at least one turn of tie-wire, not less than 0.3 cm diameter in the tie-wire groove. The length of the wire Should be at least 1.5 times the length of the insulator and should over hang the insulator at least 0.9 mon either side in a direction at right angles to the cross arm. The test voltage is applied to one end of the conductor. High voltage testing of electrical equipment requires two types of tests: (i) Type tests, and (ii) Routine test. Type tests involves quality testing of equipment at the design and development level i.e. samples of the product are taken and are tested when a new product is being developed and designed or an old product is to be redesigned and developed whereas the routine tests are meant to check the quality of the individual test piece. This is carried out to ensure quality and reliability of individual test Objects.

High voltage tests include (i) Power frequency tests and (ii) Impulse tests. These tests are carried out on all insulators.

(i) 50% dry impulse flash over test

The test is carried out on a clean insulator mounted as in a normal working condition. An impulse voltage of 1/50 μ sec. wave shape and of an amplitude which can cause 50% flash over of the insulator, is applied, i.e. of the impulses applied 50% of the impulses should cause flash over. The polarity of the impulse is then reversed and procedure repeated. There must be at least 20 applications of the impulse in each case and the insulator must not be damaged. The magnitude of the impulse voltage should not be less than that specified in standard specifications.

(ii) Impulse withstand test

The insulator is subjected to standard impulse of 1/50 μ sec. wave of specified value under dry conditions with both positive and negative polarities. If five consecutive applications do not cause any flash over or puncture, the insulator is deemed to have passed the impulse withstand test. If out of five, two applications cause flash over, the insulator is deemed to have filed the test.

(iii) Dry flash over and dry one minute test

Power frequency voltage is applied to the insulator and the voltage increased to the specified value and maintained for one minute. The voltage is then increased gradually until flash over occurs. The insulator is then flashed over at least four more times, the voltage is raised gradually to reach flash over in about 10 seconds. The mean of at least five consecutive flash over voltages must not be less than the value specified in specifications.

(iv) Wet flash over and one minute rain test

If the test is carried out under artificial rain, it is called wet flash over test. The insulator is subjected to spray of water of following characteristics:

Precipitation rate 3 ± 10% mm/min. Direction 45° to the vertical
Conductivity of water 100 micro Siemens ± 10%Temperature of water ambient +15°C

The insulator with 50% of the one-min. rain test voltage applied to it, is then sprayed for

two Minutes, the voltage rose to the one minute test voltage in approximately 10 sec. and maintained therefore one minute. The voltage is then increased gradually till flash over occurs and the insulator is then flashed at least four more times, the time taken to reach flash over voltage being in each case about10 sec. The flash over voltage must not be less than the value specified in specifications.

(v) Temperature cycle test

The insulator is immersed in a hot water bath whose temperature is 70° higher than normal water bath for T minutes. It is then taken out and immediately immersed in normal water bath for T minutes. After T minutes the insulator is again immersed in hot water bath for T minutes. The cycle is repeated three times and it is expected that the insulator should withstand the test without damage to the insulator or glaze. Here T = (15 + W/1.36) where W is the weight of the insulator in Kg‘s.

(vi) Electro-mechanical test

The test is carried out only on suspension or tension type of insulator. The insulator is Subjected to a 2½ times the specified maximum working tension maintained for one minute. Also, simultaneously 75% of the dry flash over voltage is applied. The insulator should withstand this test without any damage.

(vii) Mechanical test

This is a bending test applicable to pin type and line-post insulators. The insulator is subjected to a load three times the specified maximum breaking load for one minute. There should be no damage to the insulator and in case of post insulator the permanent set must be less than 1%. However, in case of post insulator, the load is then raised to three times and there should not be any damage to the insulator and its pin.

(viii) Porosity test

The insulator is broken and immersed in a 0.5% alcohol solution of fuchsine under a pressure of 13800 kN/m2 for 24 hours. The broken insulator is taken out and further broken. It should not show any sign of impregnation.

(ix) Puncture test

An impulse over voltage is applied between the pin and the lead foil bound over the top and side grooves in case of pin type and post insulator and between the metal fittings in case of suspension type insulators. The voltage is 1/50 μ sec. wave with amplitude twice the 50% impulse flash overvoltage and negative polarity. Twenty such applications are applied. The procedure is repeated for 2.5, 3, and 3.5 times the 50% impulse flash over voltage and continued till the insulator is punctured. The insulator must not puncture if the voltage applied is equal to the one specified in the specification.

(x) Mechanical routine test

The string in insulator is suspended vertically or horizontally and a tensile load 20% in Excess of the maximum specified working load is applied for one minute and no damage to the string should occur.

5.1.2 Testing Of Cables

High voltage power cables have proved quite useful especially in case of HV d.c. transmission. Underground distribution using cables not only adds to the aesthetic looks of a metropolitan city but it provides better environments and more reliable supply to the consumers. Preparation of Cable Sample The cable sample has to be carefully prepared for performing various tests especially electrical tests. This is essential to avoid any excessive leakage or end flash over‘s which otherwise may occur during testing and hence may give wrong information regarding the quality of cables. The length of the sample cable varies between 50cms to 10 m. The terminations are usually made by shielding the ends of the cable with stress shields so as to relieve the ends from excessive high electrical stresses. A cable is subjected to following tests:

(i) Bending tests

It is to be noted that a voltage test should be made before and after a bending test. The cable is bent round a cylinder of specified diameter to make one complete turn. It is then unwound and rewound in the opposite direction. The cycle is to be repeated three times.

(ii) Loading cycle test

A test loop, consisting of cable and its accessories is subjected to 20 load cycles with a Minimum conductor temperature 5°C in excess of the design value and the cable is energized to1.5 times the working voltage. The cable should not show any sign of damage.

(iii) Thermal stability test

After test as at (ii), the cable is energized with a voltage 1.5 times the working voltage for a cable of 132 kV rating (the multiplying factor decreases with increases in operating voltage) and the loading current is so adjusted that the temperature of the core of the cable is 5°C higher than its specified permissible temperature. The current should be maintained at this value for six hours.

(iv) Dielectric thermal resistance test

The ratio of the temperature difference between the core and sheath of the cable and the Heat flow from the cable gives the thermal resistance of the sample of the cable. It should be within the limits specified in the specifications.

(v) Life expectancy test

In order to estimate life of a cable, an accelerated life test is carried out by subjecting the Cable to a voltage stress higher than the normal working stress. It has been observed that the relation between the expected life of the cable in hours and the voltage stress is given by gKn t=where K is a constant which depends on material and n is the life index depending again on the material.

(vi) Dielectric power factor test

High Voltage Schering Bridge is used to perform dielectric power factor test on the cable Sample. The power factor is measured for different values of voltages e.g. 0.5, 1.0, 1.5 and 2.0 times the rated operating voltages. The maximum value of power factor at normal working voltage does not exceed a specified value (usually 0.01) at a series of temperatures ranging from 15°C to 65°C. The difference in the power factor between rated voltage and 1.5 times the rated voltage and the rated voltage and twice the rated voltage does not exceed a specified value. Sometimes the source is not able to supply charging current required by the test cable, a suitable choke in series with the test cable help sin tiding over the situation.

(vii) Power frequency withstand voltage test

Cables are tested for power frequency a.c. and d.c. voltages. During manufacture the entire cable is passed through a higher voltage test and the rated voltage to check the continuity of the cable. As a routine test the cable is subjected to a voltage 2.5 times the working voltage for 10 min without damaging the insulation of the cable. HV d.c. of 1.8 times the rated d.c. voltage of negative polarity for30 min. is applied and the cable is said to have withstood the test if no insulation failure takes place.

(viii) Impulse withstand voltage test

The test cable is subjected to 10 positive and 10 negative impulse voltage of magnitude as specified in specification, the cable should withstand 5 applications without any damage. Usually, after the impulse test, the power frequency dielectric power factor test is carried out to ensure that no failure occurred during the impulse test.

(ix) Partial discharge test

Partial discharge measurement of cables is very important as it gives an indication of expected life of the cable and it gives location of fault, if any, in the cable. When a cable is subjected to high voltage and if there is a void in the cable, the void breaks down and a discharge takes place. As a result, there is a sudden dip in voltage in the form of an impulse. This impulse

travels along the cable. The duration between the normal pulse and the discharge pulse is measured on the oscilloscope and this distance gives the location of the void from the test end of the cable. However, the shape of the pulse gives the nature and intensity of the discharge. In order to scan the entire length of the cable against voids or other imperfections, it is passed through a tube of insulating material filled with distilled water. Four electrodes, two at the end and two in the middle of the tube are arranged. The middle electrodes are located at a stipulated distance and these are energized with high voltage. The two end electrodes and cable conductor are grounded. As the cable is passed between the middle electrodes, if a discharge is seen on the oscilloscope, a defect in this part of the cable is stipulated and hence this part of the cable is removed from the rest of the cable.

5.1.3 Testing of Bushings

Bushings are an integral component of high voltage machines. A bushing is used to bring high voltage conductors through the grounded tank or body of the electrical equipment without excessive potential gradients between the conductor and the edge of the hole in the body. The bushing extends into the surface of the oil at one end and the other end is carried above the tank to a height sufficient to prevent breakdown due to surface leakage.

Following tests are carried out on bushings:

(i) Power Factor Test

The bushing is installed as in service or immersed in oil. The high voltage terminal of the bushing is connected to high voltage terminal of the Schering Bridge and the tank or earth portion of the bushing is connected to the detector of the bridge. The capacitance and p.f. of the bushing is measured at different voltages as specified in the relevant specification and the capacitance and p.f. should be within the range specified.

(ii) Impulse Withstand Test

The bushing is subjected to impulse waves of either polarity or magnitude as specified in the standard specification. Five consecutive full waves of standard wave form (1/50 μ sec.) are applied and if two of them cause flash over, the bushing is said to be defective. If only one flash

(iii) Chopped Wave and Switching Surge Test

Chopped wave and switching surge of appropriate duration tests are carried out on high voltage bushings. The procedure is identical to the one given in (ii) above.

(iv) Partial Discharge Test

In order to determine whether there is deterioration or not of the insulation used in the bushing, this test is carried out. The shape of the discharge is an indication of nature and severity of the defect in the bushing. This is considered to be a routine test for High voltage bushings.

(v) Visible Discharge Test at Power Frequency

The test is carried out to artain whether the given bushing will give rise to ratio interference or not during operation. The test is carried out in a dark room. The voltage as

specified is applied to the bushing (IS 2099). No discharge other than that from the grading rings or arcing horns should be visible.

(vi) Power Frequency Flash Over or Puncture Test

(Under Oil): The bushing is either immersed fully in oil or is installed as in service condition. This test is carried out to artain that the internal breakdown strength of the bushing is 15% more than the power frequency momentary dry withstand test value.

5.1.4 Testing Of power capacitor

power capacitor are one of part of the modern power system. These are used to control the voltage profile of the system. Following tests are carried out on shunt power capacitors (IS 2834):

(i) Routine Tests

Routine tests are carried out on all capacitors at the manufacturer‘s premises. During testing, the capacitors should not breakdown or behave abnormally or show any visible deterioration.

(ii) Test for Output

Ammeter and Voltmeter can be used to measure the kVAr and capacitance of the capacitor. The kVAr calculated should not differ by more than –5 to +10% of the specified value for capacitor units and 0 to10% for capacitors banks. The a.c. supply used for testing capacitor should have frequency between 40 Hz to 60 Hz, preferably as near as possible to the rated frequency and the harmonics should be minimum.

(iii) Test between Terminals

Every capacitor is subjected to one of the following two tests for 10secs:

(iii) D.C. test; the test voltage being Vt = 4.3 V0
(iv) A.C. test Vt = 2.15 V0,

where V0 is the rms value of the voltage between terminals which in the test connection gives the same dielectric stress in the capacitor element as the rated voltage Vn gives in normal service.

(iv) Test between Line Terminals and Container (For capacitor units)

An a.c. voltage of value specified in column 2 of Table 5.1 is applied between the terminals (short-circuited) of the capacitor unit and its container and is maintained for one minute, no damage to the capacitor should be observed. Figures with single star represent values corresponding to reduced insulation level (Effectively grounded system) and with double star full insulation level (non-effectively grounded system).

Table 5.1 Power frequency and impulse test voltages (Between terminals and the container)

System voltage Kv(rms)	Power Frequency Test Voltage Kv(rms)	Impulse Test voltage Kv(peak)
12	28	75
24	50	125
36	70	170
72.5	140	325
145	230*	550*
245	275**	650**

(v) IR Test:

The insulation resistance of the test capacitor is measured with the help of a megger. The megger is connected between one terminal of the capacitor and the container. The test voltage shall be d.c. voltage not less than 500 volts and the acceptable value of IR is more than 50 megohms.

(vi) Test for efficiency of Discharge Device:

In order to provide safety to personnel who would be working on the capacitors, it is desirable to connect very high resistance across the terminals of the capacitor so that they get discharged in about a few seconds after the supply is switched off. The residual capacitor voltage after the supply voltage is switched off should reduce to 50 volts in less than one minute of the capacitor is rated up to 650 volts and 5 minutes if the capacitor is rated for voltage more than 650 volts. A d.c. voltage 2 × rms rated voltage of the capacitor is applied across the parallel combination of R and C where C is the capacitance of the capacitor under test and R is the high resistance connected across the capacitor. The supply is switched off and the fall in voltage across the capacitor as a function of time is recorded. If C is in microfarads and R in ohms, the time to discharge to 50 volts can be calculated from the formula $t = 2.3 \times 10–6$ CR (log10 V – 1.7) secs Where V is the rated rms voltage of the capacitor in volts.

Type Tests

The type tests are carried out only once by the manufacturer to prove that the design of capacitor complies with the design requirements:

(i) Dielectric Loss Angle Test (p.f. test):

High voltage Schering Bridge is used to measure dielectric power factor. The voltage applied is the rated voltage and at temperatures 27°C ± 2°C. The value of the loss angle tan δ should not be more than10% the value agreed to between the manufacturer and the purchaser and it should not exceed 0.0035for mineral oil impregnates and 0.005 for chlorinated impregnates.

(ii) Test for Capacitor Loss:

The capacitor loss includes the dielectric loss of the capacitor and the V2/R loss in the discharge resistance which is permanently connected. The dielectric loss can be evaluated from the loss angle as obtained in the previous test and V2/R loss can also be calculated. The total power loss should not be more than 10% of the value agreed to between the manufacturer and consumer.

(iii) Stability Test:

The capacitor is placed in an enclosure whose temperature is maintained at ±2°C above the maximum working temperature for 48 hours. The loss angle is measured after 16 hours, 24 hours and 48 hours using High voltage Schering Bridge at rated frequency and at voltage 1.2 times the rated voltage. If the respective values of loss angle are tan δ1, tan δ2 and tan δ3, these values should satisfy the following relations (anyone of them):

(a) $\tan\delta1 + \tan\delta2 \leq 2 \tan\delta2 < 2.1 \tan\delta1$ or (b) $\tan\delta1 \geq \tan\delta2 \geq \tan\delta3$

(iv) Impulse voltage test between terminal and container:

The capacitor is subjected to impulse voltage of 1/50 μ sec. Wave and magnitude as stipulated in column 3 of Table 5.1. Five impulses of either polarity should be applied between the terminals (joined together) and the container. It should withstand this voltage without causing any flash over.

5.1.5 TESTING OF POWER TRANSFORMERS

Transformer is one of the most expensive and important equipment in power system. If it is not suitably designed its failure may cause a lengthy and costly outage. Therefore, it is very important to be cautious while designing its insulation, so that it can withstand transient over voltage both due to switching and lightning. The high voltage testing of transformers is, therefore, very important and would be discussed here. Other tests like temperature rise, short circuit, open circuit etc. are not considered here. However, these can be found in the relevant standard specification. Partial Discharge Test The test is carried out on the windings of the transformer to assess the magnitude of discharges. The transformer is connected as a test specimen similar to any other equipment as discussed in and the discharge measurements are made. The location and severity of fault is artained using the travelling wave theory technique as explained. The measurements are to be made at all the terminals of the transformer and it is estimated that if the apparent measured charge exceeds 104picocoulombs, the discharge magnitude is considered to be severe and the transformer insulation should be so designed that the discharge measurement should be much below the value of 104 Pico-coulombs.

Impulse Testing of Transformer

The impulse level of a transformer is determined by the breakdown voltage of its minor insulation (Insulation between turn and between windings), breakdown voltage of its major insulation (insulation between windings and tank) and the flash over voltage of its bushings or a combination of these. The impulse characteristics of internal insulation in a transformer differ from flash over in air in two main respects. Firstly the impulse ratio of the transformer insulation is higher (varies from 2.1 to 2.2) than that of bushing (1.5 for bushings, insulators etc.). Secondly, the impulse breakdown of transformer insulation in practically constant and is independent of time of application of impulse voltage.

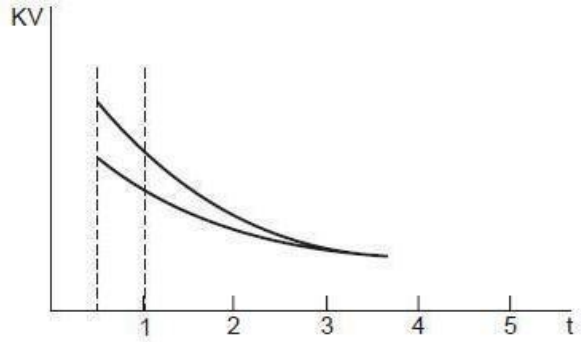

Figure: 5.1 Volt time curve of typical major insulation in transformer

Fig.5.1 shows that after three micro seconds the flash over voltage is substantially constant. The voltage stress between the turns of the same winding and between different windings of the transformer depends upon the steepness of the surge wave front. The voltage stress may further get aggravated by the piling up action of the wave if the length of the surge wave is large. In fact, due to high steepness of the surge waves, the first few turns of the winding are overstressed and that is why the modern practice is to provide extra insulation to the first few turns of the winding. Fig. 5.2 shows the equivalent circuit of a transformer winding for impulse voltage.

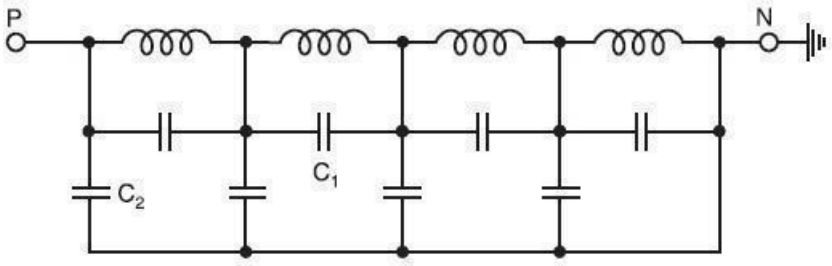

Figure: 5.2 Equivalent circuit of a transformer for impulse voltage

Here C1 represents inter-turn capacitance and C2 capacitance between winding and the ground (tank). In order that the minor insulation will be able to withstand the impulse voltage, the winding is subjected to chopped impulse wave of higher peak voltage than the full wave. This chopped wave is produced by flash over of a rod gap or bushing in parallel with the transformer insulation. The chopping time is usually 3 to 6 micro seconds. While impulse voltage is applied between one phase and ground, high voltages would be induced in the

secondary of the transformer. To avoid this, the secondary windings are short-circuited and finally connected to ground. The short circuiting, however, decreases the impedance of the transformer and hence poses problem in adjusting the wave front and wave tail timings of wave. Also, the minimum value of the impulse capacitance required is given by

$$C_0 = \frac{P \times 10^8}{Z \times V^2} \mu F$$

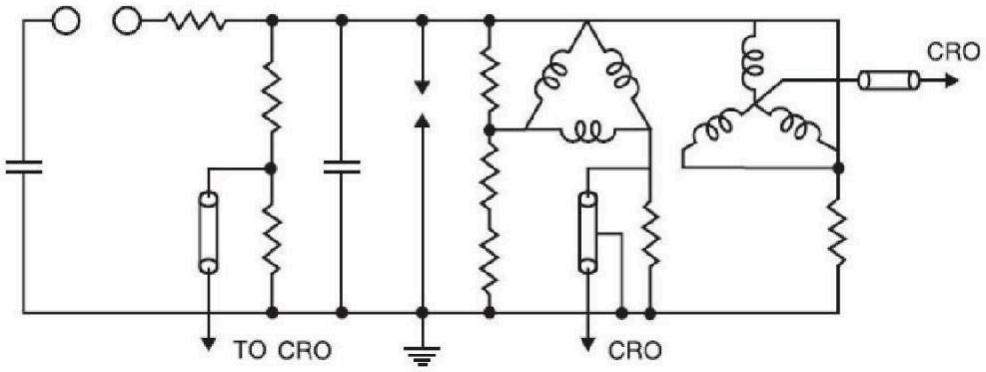

Figure: 5.3 Arrangement for impulse testing of transformer

Where P = rated MVA of the transformer Z = per cent impedance of transformer. V = rated voltage of transformer. Fig. 5.3 shows the arrangement of the transformer for impulse testing. CRO forms an integral part of the transformer impulse testing circuit. It is required to record to wave forms of the applied voltage and current through the winding under test.

Impulse testing consists of the following steps:

(iv) Application of impulse of magnitude 75% of the Basic Impulse Level (BIL) of the transformer under test.

(v) One full wave of 100% of BIL.

(vi) Two chopped wave of 115% of BIL.

(vii) One full wave of 100% BIL and

(viii) One full wave of 75% of BIL.

During impulse testing the fault can be located by general observation like noise in the tank or smoke or bubble in the breather. If there is a fault, it appears on the Oscilloscope as a partial of complete collapse of the applied voltage. Study of the wave form of the neutral current also indicated the type of fault. If an arc occurs between the turns or form turn to the ground, a train of high frequency pulses are seen on the oscilloscope and wave shape of impulse changes. If it is a partial discharge only, high frequency oscillations are observed but no change in wave shape occurs. The bushing forms an important and integral part of transformer insulation. Therefore, its impulse flash over must be carefully investigated. The impulse strength of the transformer winding is same for either polarity of wave whereas the flash over voltage for bushing is different for different polarity. The manufacturer, however, while specifying the impulse strength of the transformer takes into consideration the overall impulse characteristic of the transformer.

5.1.6 Testing Of Circuit Breakers

Equipments when designed to certain specification and is fabricated needs testing for its performance. The general design is tried and the results of such tests conducted on one selected breaker and are thus applicable to all others of identical construction. These tests are called the type tests. These tests are classified as follows:

(i) Short circuit tests:

- Making capacity test.
- Breaking capacity test.
- Short time current test.
- Operating duty test

2. Dielectric tests:

Power frequency test:

- One minute dry withstand test.
- One minute wet withstand test.
- Impulse voltage dry withstand test.

3. Thermal test.

4. Mechanical test

Once a particular design is found satisfactory, a large number of similar C.Bs. are manufactured for marketing. Every piece of C.B is then tested before putting into service. These tests are known as routine tests. With these tests it is possible to find out if incorrect assembly or inferior quality material has been used for proven design equipment. These tests are classified as

(i) operation tests (ii) mill volt drop tests, (iii) power frequency voltage tests at manufacturer‘s premises, and (iv) power frequency voltage tests after erection on site.

We will discuss first the type tests. In that also we will discuss the short circuit tests after the other three tests. Dielectric Tests The general dielectric characteristics of any circuit breaker or switchgear unit depend upon the basic design i.e. clearances, bushing materials, etc. upon correctness and accuracy in assembly and upon the quality of materials used. For a C.B. these factors are checked from the viewpoint of their ability to withstand over voltages at the normal service voltage and abnormal voltages during lightning or other phenomenon.

The test voltage is applied for a period of one minute between (i) phases with the breaker closed, (ii) Phases and earth with C.B. open, and (iii) across the terminals with breaker open. With this the breaker must not flash over or puncture.

These tests are normally made on indoor switchgear. For such C.Bs the impulse tests generally are unnecessary because it is not exposed to impulse voltage of a very high order. The

high frequency switching surges do occur but the effect of these in cable systems used for indoor switchgear are found to be safely withstood by the switchgear if it has withstood the normal frequency test. Since the outdoor switchgear is electrically exposed, they will be subjected to over voltages caused by lightning. The effect of these voltages is much more serious than the power frequency voltages in service. Therefore, this class of switchgear is subjected in addition to power frequency tests, the impulse voltage tests. The test voltage should be a standard 1/50 μsec wave, the peak value of which is specified according to the rated voltage of the breaker. A higher impulse voltage is specified for non-effectively grounded system than those for solidly grounded system. The test voltages are applied between (i) each pole and earth in turn with the breaker closed and remaining phases earthed, and (ii) between all terminals on one side of the breaker and all the other terminals earthed, with the breaker open. The specified voltages are withstanding values i.e. the breaker should not flash over for 10 applications of the wave. Normally this test is carried out with waves of both the polarities. The wet dielectric test is used for outdoor switchgear. In this, the external insulation is sprayed for two minutes while the rated service voltage is applied, the test overvoltage is then maintained for 30 seconds during which no flash over should occur. The effect of rain on external insulation is partly beneficial, insofar as the surface is thereby cleaned, but is also harmful if the rain contains impurities.

Thermal Tests

These tests are made to check the thermal behavior of the breakers. In this test the rated current through all three phases of the switchgear is passed continuously for a period long enough to achieve steady state conditions. Temperature readings are obtained by means of thermocouples whose hot junctions are placed in appropriate positions. The temperature rise above ambient, of conductors, must normally not exceed 40°C when the rated normal current is less than 800 amps and 50°C if it is 800amps and above.

An additional requirement in the type test is the measurement of the contact resistances between the isolating contacts and between the moving and fixed contacts. These points are generally the main sources of excessive heat generation. The voltage drop across the breaker pole is measured for different values of d.c current which is a measure of the resistance of current carrying parts and hence that of contacts.

Mechanical Tests

A C.B. must open and close at the correct speed and perform such operations without mechanical failure. The breaker mechanism is, therefore, subjected to a mechanical endurance type test involving repeated opening and closing of the breaker. B.S. 116: 1952 requires 500 such operations without failure and with no adjustment of the mechanism. Some manufacture feel that as many as 20,000operations may be reached before any useful information regarding the possible causes of failure maybe obtained. A resulting change in the material or dimensions of a particular component may considerably improve the life and efficiency of the mechanism.

Short Circuit Tests

These tests are carried out in short circuit testing stations to prove the ratings of the C.Bs. Before discussing the tests it is proper to discuss about the short circuit testing stations.
There are two types of testing stations; (i) field type, and (ii) laboratory type. In case of field type stations the power required for testing is directly taken from a large power system. The breaker

to be tested is connected to the system. Whereas this method of testing is economical for high voltage C.Bs. it suffers from the following drawbacks:

- The tests cannot be repeatedly carried out for research and development as it disturbs the whole network.
- The power available depends upon the location of the testing stations, loading conditions, Installed capacity, etc.
- Test conditions like the desired recovery voltage, the RRRV etc. cannot be achieved conveniently. In case of laboratory testing the power required for testing is provided by specially designed generators.

This method has the following advantages:

1. Test conditions such as current, voltage, power factor, restricting voltages can be controlled accurately.
2. Several indirect testing methods can be used.
3. Tests can be repeated and hence research and development over the design is possible.

The limitations of this method are the cost and the limited power availability for testing the breakers.

Short Circuit Test Plants

The essential components of a typical test plant are represented in Fig. 5.4. The short-circuit power is supplied by specially designed short-circuit generators driven by induction motors. The magnitude of voltage can be varied by adjusting excitation of the generator or the transformer ratio. A plant master breaker is available to interrupt the test short circuit current if the test breaker should fail. Initiation of the short circuit may be by the master breaker, but is always done by a making switch which is specially designed for closing on very heavy currentsbut never called upon to break currents. The generator winding may be arranged for either star or delta connection according to the voltage required; by further dividing the winding into two sections which may be connected in series or parallel, a choice off our voltages is available. In addition to this the use of resistors and reactors in series gives a wide range of current and power factors. The generator, transformer and reactors are housed together, usually in the building accommodating the test cells.

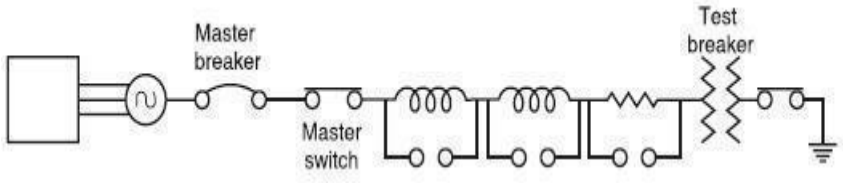

Figure: 5.4 Schematic diagram of a typical test plant

Generator

The short circuit generator is different in design from the conventional power station. The capacity of these generators may be of the order of 2000 MVA and very rigid bracing of the conductors and coil ends is necessary in view of the high electromagnetic forces possible. The limiting factor for the maximum output current is the electromagnetic force. Since the operation of the generator is intermittent, this need not be very efficient. The reduction of ventilation enables the main flux to be increased and permits the inclusion of extra coil end supports. The machine reactance is reduced to a minimum.

Immediately before the actual closing of the making switch the generator driving motor is switched out and the short circuit energy is taken from the kinetic energy of the generator set. This is done to avoid any disturbance to the system during short circuit. However, in this case it is necessary to compensate for the decrement in generator voltage corresponding to the diminishing generator speed during the test. This is achieved by adjusting the generator field excitation to increase at a suitable rate during the short circuit period. The resistors are used to control the p.f of the current and to control the rate of decay of d.c component of current. There are a number of coils per phase and by combinations of series and parallel connections desired value of resistance and/or reactance can be obtained. These are used for breaking line charging currents and for controlling the rate of re-striking voltage.

Short Circuit Transformers

The leakage reactance of the transformer is low so as to withstand repeated short circuits. Since they are in use intermittently, they do not pose any cooling problem. For voltage higher than the generated voltages, usually banks of single phase transformers are employed. In the short circuit station at Bhopal there are three single phase units each of 11 kV/76 kV. The normal rating is 30 MVA but their short circuit capacity is 475 MVA. Master C.Bs.

These breakers are provided as backup which will operate, should the breaker under test fail to operate. This breaker is normally air blast type and the capacity is more than the breaker under test. After every test, it isolates the test breaker from the supply and can handle the full short circuit of the test circuit.

Make Switch

The make switch is closed after other switches are closed. The closing of the switch is fast, sure and without chatter. In order to avoid bouncing and hence welding of contacts, a high air pressure is maintained in the chamber. The closing speed is high so that the contacts are fully closed before the short circuit current reaches its peak value.

Test Procedure

Before the test is performed all the components are adjusted to suitable values so as to obtain desired values of voltage, current, rate of rise of restricting voltage, p.f. etc. The measuring circuits are connected and oscillograph loops are calibrated. During the test several operations are performed in a sequence in a short time of the order of0.2 sec. This is done with the help of a drum switch with several pairs of contacts which is rotated with a motor. This drum

when rotated closes and opens several control circuits according to a certain sequence. In one of the breaking capacity tests the following sequence was observed:

- After running the motor to a speed the supply is switched off.
- Impulse excitation is switched on.
- Master C.B. is closed.
- Oscillograph is switched on.
- Make switch is closed.
- C.B. under test is opened.
- Master C.B. is opened.
- Exciter circuit is switched off.

The circuit for direct test is shown in Fig. 5.5

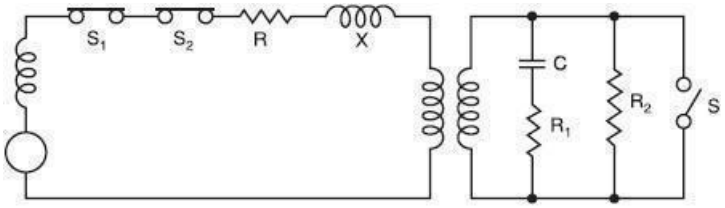

Figure: 5.5 Circuit for direct testing

Here XG = generator reactance, S1 and S2 are master and make switches respectively. R and X are the resistance and reactance for limiting the current and control of p.f., T is the transformer, C, R1 andR2 is the circuit for adjusting the restricting voltage. For testing, breaking capacity of the breaker under test, master and breaker under test are closed first. Short circuit is applied by closing the making switch. The breaker under test is opened at the desired moment and breaking current is determined from the oscillograph as explained earlier. For making capacity test the master and the make switches are closed first and short circuit is applied by closing the breaker under test. The making current is determined from the oscillograph as explained earlier. For short-time current test, the current is passed through the breaker for a short-time say1 second and the oscillograph is taken as shown in Fig. 5.6.From the oscillogram the equivalent r.m.s value of short-time current is obtained as follows:

The time interval 0 to T is divided into 10 equal parts marked as 0, 1, 2 ..., 9 and 10. Let the r.m.s value of currents at these instants be I0, I1, I2... I9 and I10 (asymmetrical values).

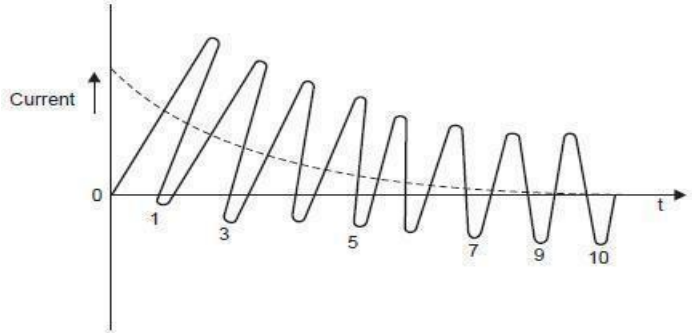

From these values, the r.m.s value of short-time current is calculated using Simpson formula.

Figure 5.6 Determination of short-time current

$$I = \sqrt{\frac{1}{3}[K_0^2 + 4(I_1^2 + I_2^2 + I_3^2 + \cdots . + I_9^2) + 2(I_2^2 + I_4^2 + \cdots + I_{10}^2)}$$

Operating duty tests are performed according to standard specification unless the duty is marked on the rating plate of the breaker. The tests according to specifications are:

(i) B—3′—B—3′—B at 10% of rated symmetrical breaking capacity;
(ii) B—3′—B—3′—B at 30% of rated symmetrical breaking capacity;
(iii) B—3′—B—3′—B at 60% of rated symmetrical breaking capacity;
(iv) B—3′—MB—3′—MB at not less than 100% of rated symmetrical breaking capacity and

not less than 100% of rated making capacity. Test duty (iv) may be performed as two separate duties as follows:

(a) M—3′—M (Make test);
(b) B—3′—B—3′—B (Break test)
(c) B—3′—B—3′—B at not less than 100% rated asymmetrical breaking capacity.

Here B and M represent breaking and making operations respectively. MB denotes the making operation followed by breaking operation without any international time-lag.3′ denotes the time in minutes between successive operations of an operating duty.

5.1.7 Testing Isolators

Coupler digital isolators are tested in production to guarantee that both the isolation and data transmission conform to the data sheet specifications. This is done with a two-pass test performed on 100% of our products: a High Voltage test followed by a parametric test. This differs from most non-isolated ICs which are subjected only to parametric testing.

The High Voltage test

It has two elements: guaranteeing the Isolation Rating and ensuring the integrity of the isolation barrier. ―Isolation Rating‖ is the voltage (60 Hz rms) that can safely be applied across the inputs and outputs of a device for one minute. This rating is certified by regulatory agencies such as UL; typical isolation ratings guaranteed on iCoupler devices are 2.5 kV rms and 5 kV rms. A one minute test in production would be cost-prohibitive, so UL, for example, allows the test to be reduced to one second provided the test voltage is 120% of the specified isolation rating; for a 2.5 kV rms isolation rating, the production test is performed at 3 kV rms for one second, while a 6 kV rms test is performed to guarantee a 5 kV rms isolation rating. During this test, we check for leakage that indicates that barrier has broken down, but leakage current can also be caused by capacitance across the isolation barrier. Most isolators rated at 2.5 kV rms have a leakage current less than 5 μA which is proportional to the voltage across the isolation barrier. This requires that we set test limits to account for these two main components of leakage current during high voltage testing fig shown in 5.6(a).

The second element of High Voltage testing checks the integrity of the isolation barrier using a method known as Partial Discharge. This test detects defects, such as cavities or voids, in the insulation. Applying a high voltage induces breakdown in voids or cavities in the device and will transfer charge across the void. The repeated transfer of charge can make the void larger and eventually causes the insulation to fail. Charge transfer is measured in pico-Coulombs and a maximum limit of 5 pC at 1050 V peak. is accepted per the applicable VDE standards. The 1050 V peak test voltage is calculated from as 1.875 times the maximum working voltage rating (e.g., 560 V peak times 1.875 to a meet 1 minute rating. After High Voltage testing the part is then subjected to parametric testing performance (e.g., supply current, input signal current, propagation delay, Pulse Width Distortion, Data Rate, Supply voltage range, etc.). All parameters that have Min/Max limits on the data sheet are tested 100 % in production.

5.1.8 surge arresters

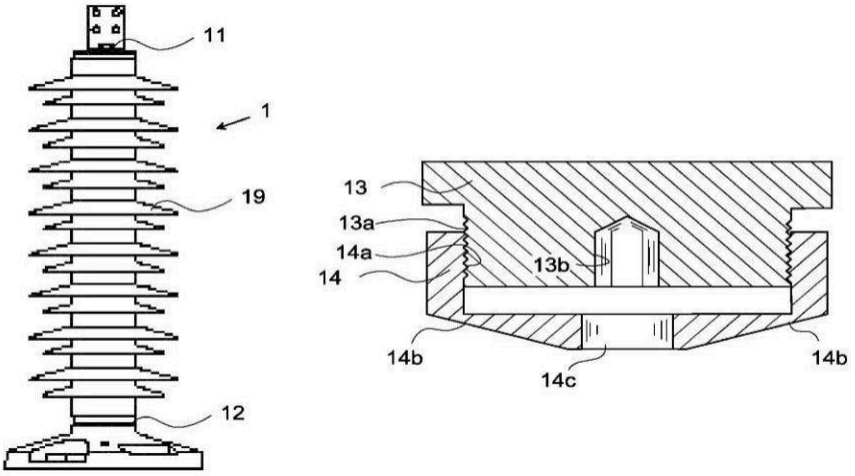

Figure: 5.6(a) surge arresters

A surge arrester is a protective equipment installed between communication equipment and coaxial cable connector or between two communication equipment‘s to protect communication equipment from damage caused by transient state voltage formed by lightning induction. It adopts quarter-wave technology, is designed according to VSW theory and frequency spectrum of lightning wave. It has features of quick reaction, big current passing capacity, wide frequency band, low VSWR, low insertion loss, easy installation and free maintenance. It can be used to meet protection requirements of various communication equipment‘s and lightning sensitivity.

An electrical appliance used to protect electronic equipment against lightning overvoltage transients. It is usually connected to wires (power phase line, signal line, zero line) and ground between being protective devices in parallel, when the lightning over-voltage the value of the required actions voltage, arrester immediate to limit over-voltage amplitude lead to protection equipment and systems, enabling the system to work properly.

- Low-voltage surge arrester Apply in Low-voltage distribution system, exchange of electrical appliances protector, low-voltage distribution transformer windings
- Distribution arrester Apply in 3KV, 6KV, 10KV AC power distribution system to protect distribution transformers, cables and power station equipment
- The station type of common valve arrester Used to protect the 3 ~ 220KV transformer station equipment and communication system
- Magnetic blow valve station arrester Use to 35 ~ 500KV protect communication systems, transformers and other equipment
- Protection of rotating machine using magnetic blow valve arrester Used to protect the AC generator and motor insulation
- Line Magnetic blow valve arrester Used to protect 330KV and above communication system circuit equipment insulation
- DC or blowing valve-type arrester Use to protect the DC system‘s insulation of electrical equipment
- Neutral protection arrester Apply in motor or the transformer‘s neutral protection
- Fiber-tube arrester Apply in the power station‘s wires and the weaknesses protection in the insulated.
- Plug-in Signal Arrester Used to twisted-pair transmission line in order to protect communications and computer systems
- High-frequency feeder arrester Used to protect the microwave, mobile base stations satellite receiver, etc.
- Receptacle-type surge arrester Use to Protect the terminal Electronic equipment
- Signal Arrester Apply in MODEM, DDN line, fax, phone, process control signal circuit etc.
- Network arrester Apply in servers, workstations, interfaces etc.
- Coaxial cable lightning arrester Used to the coaxial cable in order to protect the wireless transmission and receiving system

5.2 TAN DELTA MEASUREMENT

In case of time varying electric fields, the current density Jc using Amperes law is given by

$$J_c = \sigma E + \frac{\partial D}{\partial t} = \sigma E + \varepsilon \frac{\partial E}{\partial t}$$

Therefore,

$$J_c = \sigma E + j\,\omega\,\varepsilon\, E$$
$$= (\sigma + j\,\omega\,\varepsilon)E$$

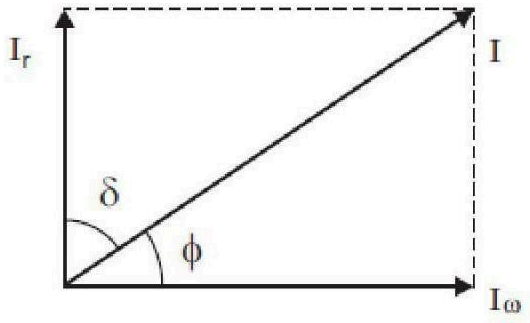

Figure: 5.7 Phasor diagram for a real dielectric material

In general, in addition to conduction losses, ionizationand polarization losses also occur and, therefore, the dielectric constant ε = ε0 εr is no longer a real quantity rather it is a complex quantity. By definition, the dissipation factor tan δ is the ratio of real component of current Iω to the reactive component *Ir* (Fig.5.7). Here δ is the angle between the reactive component of current and the total current flowing through the dielectric at fundamental frequency. When δ is very small tan δ = δ when δ is expressed in radians and tan δ = sin δ = sin (90 – φ) = cos φ *i.e.,* tan δ then equals the power factor of the dielectricmaterial.As mentioned earlier, the dielectric loss consists of three components corresponding to the three loss means for each of these an individual dissipation factor can be given such that mechanism

$$\tan\delta = \tan\delta_c + \tan\delta_p + \tan\delta_i$$

If only conduction losses occur then

$$\tan\delta = \frac{\sigma}{\omega\varepsilon_0\,\varepsilon_r}$$

where

$$\varepsilon_r^* = \frac{(\varepsilon' - j\,\varepsilon'')}{\varepsilon_0} = \varepsilon_r' - j\,\varepsilon_r''$$

ε_r^* is called the complex relative permittivity or complex dielectric constant, ε' and ε_r' are called the permittivity and relative permittivity and ε'' and ε_r'' are called the loss factor and relative loss factor respectively.T he loss tangent the product of the angular frequency and ε'' is equivalent to the dielectric conductivity ζ'' *i.e.,* $\zeta'' = \omega\varepsilon''$. The dielectric conductivity takes into account all the three power dissipative processes including the one which is frequency dependent. Fig. 5.8 shows two equivalent circuits representing the electrical behavior of insulating materials under a.c. voltages, losses have been simulated by resistances

The loss tangent

$$\tan\delta = \frac{\varepsilon''}{\varepsilon'} = \frac{\varepsilon_r''}{\varepsilon_r'}$$

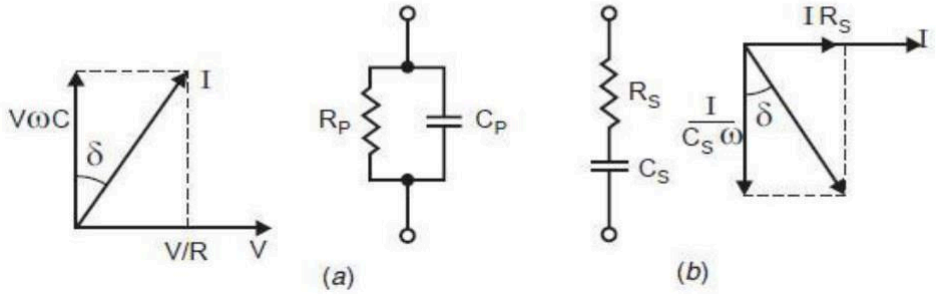

Figure: 5.8 Equivalent circuits for an insulating material

Normally the angle between V and the total current in a pure capacitor is 90°. Due to losses, thisangle is less than 90°. Therefore, δ is the angle by which the voltage and charging current fall short ofthe 90° displacement.
For the parallel circuit the dissipation factor is given by

$$\tan\delta = \frac{1}{\omega C_p R_p}$$

and for the series circuit

$$\tan\delta = \omega\, C_s R_s$$

For a fixed frequency, both the equivalents hold good and one can be obtained from the other. However, the frequency dependence is just the opposite in the two cases and this shows the limitedvalidity of these equivalent circuits.The information obtained from the measurement

of tan δ and complex permittivity is an indicationof the quality of the insulating material.

- If tan δ varies and changes abruptly with the application of high voltage, it shows inceptionof internal partial discharge.

The effect to frequency on the dielectric properties can be studied and the band of frequencies where dispersion occurs i.e., where that permittivity reduces with rise in frequency can be obtained.

5.3 PARTIAL DISCHARGE MEASUREMENTS

What is a ‗partial discharge'? Let us use the definition given in the International Standard of the IEC (International Electro technical Commission) related to partial discharge measurements, Partial discharge (PD) is a localized electrical discharge that only partially bridges the insulation between conductors and which may or may not occur adjacent to a conductor. This definition is supplemented by three notes, from which only notes 1 and2 shall be cited.

NOTE 1 – Partial discharges are in general a consequence of local electrical stress concentrations in the insulation or on the surface of the insulation. Generally such discharges appear as pulses of duration of much less than1 μs. More continuous forms may, however, occur, as for example the socalledpulse-less discharges in gaseous dielectrics. This kind of discharge will normally not be detected by the measurement methods described in this standard.

NOTE 2 – ‗Corona' is a form of partial discharge that occurs in gaseous media around conductors which are remote from solid or liquid insulation.' Corona' should not be used as a general term for all forms of PD.No further explanations are necessary to define this kind of phenomena: PDsare thus localized electrical discharges within any insulation system as applied in electrical apparatus, components or systems. In general PDs are restricted to a part of the dielectric materials used, and thus only partially bridging the electrodes between which the voltage is applied. The insulation may consist of solid, liquid or gaseous materials, or any combination of these. The term' partial discharge' includes a wide group of discharge phenomena:

(i) internal discharges occurring in voids or cavities within solid or liquid dielectrics;
(ii) surface discharges appearing at the boundary of different insulation materials;

(iii)corona discharges occurring in gaseous dielectrics in the presence of

inhomogeneous fields;

(iv) Continuous impact of discharges in solid dielectrics forming discharge channels (treeing).

The significance of partial discharges on the life of insulation has long been recognized. Every discharge event causes a deterioration of the material by the energy impact of high energy electrons or accelerated ions, causing chemical transformations of many types. As will be shown later, the number of discharge events during a chosen time interval is strongly dependent on the

kind of voltage applied and will be largest for a.c. voltages. It is also obvious that the actual deterioration is dependent upon the material used. Corona discharges in air will have no influence on the life expectancy of an overhead line; but PDs within a thermoplastic dielectric, e.g. PE, may cause breakdown within a few days.

It is still the aim of many investigations tolerate partial discharge to the lifetime of specified materials. Such a quantitatively defined relationship is, however, difficult to ensure. PD measurements have nevertheless gained great importance during the last four decades and large number publications are concerned either with the measuring techniques involved or with the deterioration effects of the insulation. The detection and measurement of discharges is based on the exchange of energy taking place during the discharge. These exchanges are manifested as:

(i) electrical pulse currents (with some exceptions, i.e. some types of glow discharges);

(ii) Dielectric losses;

(iii) e.m. radiation (light);

(iv) Sound (noise); increased gas pressure;

(v) Chemical reactions.

Therefore, discharge detection and measuring techniques may be based on the observation of any of the above phenomena. The oldest and simplest method relies on listening tothe acoustic noise from the discharge, the _hissing test'. The sensitivity is, however, often low and difficulties arise in distinguishing between discharges and extraneous noise sources, particularly when tests are carried out on factory premises. It is also well known that the energy released by PD will increase the dissipation factor; a measurement of tan υ in dependency of voltage applied displays an _ionization knee', a bending of the otherwise straight dependency. This knee, however, is blurred and not pronounced, even with an appreciable amount of PD, as the additional losses generated in very localized sections can be very small in comparison to the volume losses resulting from polarization processes.

The use of optical techniques is limited to discharges within transparent media and thus not applicable in most cases. Only modern acoustical detection methods utilizing ultrasonic transducers can successfully be used to localize the discharges. These very specialized methods are not treated here. The most frequently used and successful detection methods are the electrical ones, to which the new IEC Standard is also related. These methods aim to separate the impulse currents linked with partial discharges from another phenomena. The adequate application of different PD detectors which became now quite well defined and standardized presupposes fundamental knowledge about the electrical phenomena within the test samples and the test circuits. Thus an attempt is made to introduce the reader to the basics of these techniques without full treatment, which would-be too extensive. Not treated here, however, are non-electrical methods for PD detection.

5.3.1 The basic PD test circuit

Electrical PD detection methods are based on the appearance of a _PD (current or voltage) pulse‘ at the terminals of a test object, which may be either a simple dielectric test specimen for fundamental investigations or even a largeh.v. apparatus which has to undergo a PD test. For the evaluation of the fundamental quantities related to a PD pulse we simulate the test object, as usual, by the simple capacitor arrangement as shown in Fig.5.9(a), comprising solid orfluid dielectric materials between the two electrodes or terminals A and B, and a gas- filled cavity. The electric field distribution within this test object is here simulated by some partial capacitances, which is possible as long as no space charges disturb this distribution. discharge current which cannot be measured, would have a shape as governed by the gas discharge process and would in general be similar to a Dirac function, i.e. this discharge current is generally a very short pulse in the nanosecond range. Let us now assume that the sample was charged to the voltage Va but the terminals A, B are no longer connected to a voltage source.

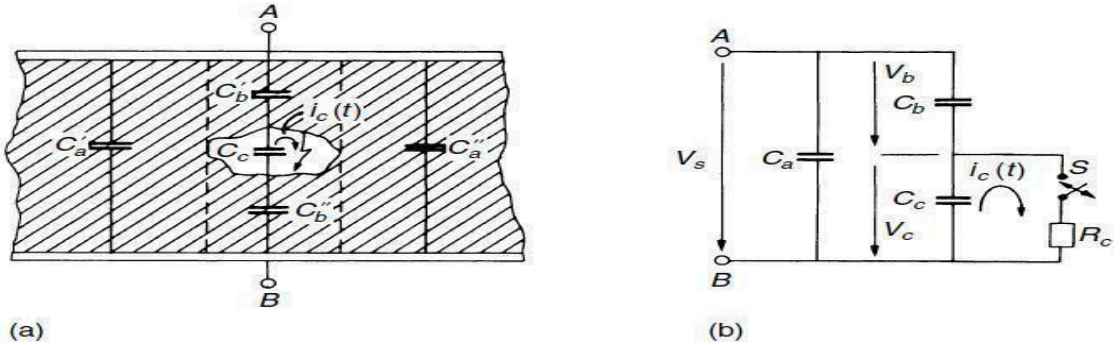

Figure: 5.9 Simulation of a PD test object. (a) Scheme of an insulation system comprising a cavity. (b) Equivalent circuit

If the switch Sis closed and Cc becomes completely discharged, the current i releases charge υqc D Ccυ Vc from Cc, a charge which is lost in the whole system asassumed for simulation. By comparing the charges within the system before and after this discharge, we receive the voltage drop across the terminal υVa as This voltage drop contains no information about the charge υqc, but it is proportional to Cbυ Vc, a magnitude vaguely related to this charge, as Cbwill increase with the geometric dimensions of the cavity. Va is clearly a quantity which could be measured.

It is a negative voltage step with a rise time depending upon the duration of ic. The magnitude of the voltage step, however, is quite small, although υVc is in a range of some102 to 103 V; but the ratio Cb/Ca will always be very small and unknown according to eqn. Thus a direct detection of this voltage step by measurement of the whole input voltage would be a tedious task. The detection circuits are therefore based upon another quantity, which can immediately be derived from a nearly complete circuit shown in Fig. 5.10.

$$\delta V_a = \frac{C_b}{C_a + C_b} \delta V_c$$

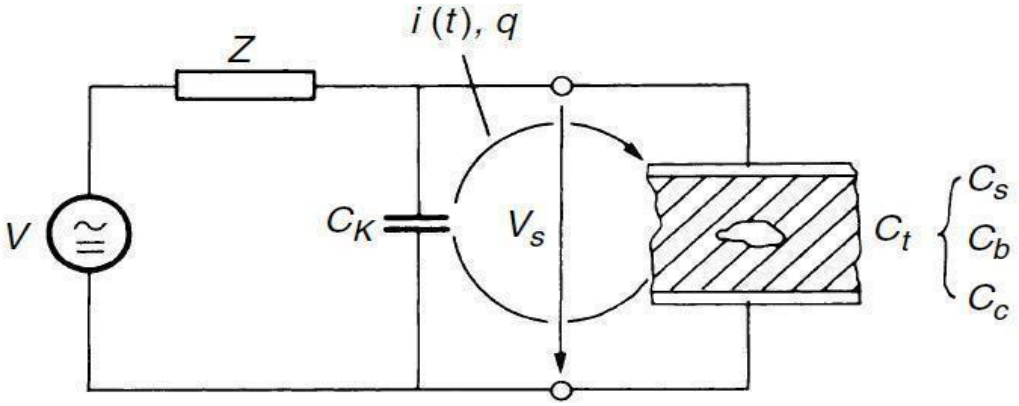

Figure: 5.10 The PD test object Ct within a PD test circuit

The test object, Fig. 5.9 (a), is now connected to a voltage source V, in general an a.c. power supply. An impedance Z, comprising either only the natural impedance of the lead between voltage source and the parallel arrangement of CK and enlarged by a PD-free inductance or filter, may disconnect the _coupling capacitor‘ CK and the test specimen Ct from the voltage source during the short duration PD phenomena only. Then CK is a storage capacitoror quite a stable voltage source during the short period of the partial discharge. It releases a charging current or the actual _PD current pulse‘ i between CK and Ct and tries to cancel the voltage drop υVa across υVa is completely compensated and the charge transfer provided by the current pulse i is given by

$$q = \int i(t) = (C_a + C_b)\delta V_a$$

With eqn this charge becomes

$$q = C_b \delta V_c$$

and is the so-called apparent charge of a PD pulse, which is the most fundamental quantity of all PD measurements. The word _apparent‘ was introduced because this charge again is not equal to the amount of charge locally involved at the site of the discharge or cavity Cc. This PD quantity is much more realistic than Va in eqn as the capacitance Ca of the test object, which is its main part of Ct, has no influence on it. And even the amount of charge as locally involved during a discharge process is of minor interest, as only the number and magnitude of their dipole moments and their interaction with the electrodes or terminals determine the magnitude of the PD current pulse. The condition CK × Ca_.DCt is, however, not always applicable in practice, as either Ct is quite large, or the loading of an a.c. power supply becomes high and the cost of building such a large capacitor, which must be free of anyPD, is not economical.

For a finite value of CK the charge q or the current is reduced, as the voltage across CK will also drop during the charge transfer. Designating this voltage drop by uVŁa, we may compute this value by assuming that the same charge Cb, Vc has to be transferred in the circuits of Figs 5.9(b) and 5.10 . Therefore The relationship qm/q indicates the difficulties arising in PD measurements for test objects of large capacitance values Ct. Although CK and Ct may be known, the ability to detect small values of q will decrease as all instruments capable of integrating the currents i will have a lower limit for quantifying.

Equation therefore sets limits for the recording of _pi co coulombs‘ in large test objects. During actual measurements, however, a calibration procedure is needed during which artificial apparent charge q of well-known magnitude is injected to the test object, critical note is made with reference to the definition of the apparent charge q as given in the new IEC Standard 60270.31 The original text of this definition is: apparent charge q of a PD pulse is that unipolar. charge which, if injected within a very short time between the terminals of the test object in a specified test circuit, would give the same reading on the measuring instrument as the PD current pulse itself. The apparent charge is usually expressed inpicocoulombs.

This definition ends with:

NOTE – The apparent charge is not equal to the amount of charge locallyinvolved at the site of the discharge and which cannot be measured directly. This definition is an indication of the difficulties in understanding the physical phenomena related to a PD event. As one of the authors of this book has been chairman of the International Working Group responsible for setting up this new standard, he is familiar with these difficulties and can confirm that the definition is clearly a compromise which could be accepted by the international members of the relevant Technical Committee of IEC. The definition is correct. It relates to a calibration procedure of a PD test and measuring circuit, as already mentioned above. The _NOTE‘, however, is still supporting the basically wrong assumption that a certain amount or number of charges at the site of the discharge should be measured. As already mentioned: it is not the number of charges producing the PD currents, but the number of induced dipole moments which produce a sudden increase in the capacitance of the test object.

5.3.2 PD currents

Before discussing the fundamentals of the measurement of the apparent charge some remarks concerning the PD currents i will be helpful, as much of the research work has been and is still devoted to these currents, which are difficult to measure with high accuracy. The difficulties arise for several reasons. If V is an a.c. voltage, the main contribution of the currents flowing within the branches CK and Ct of Fig. 5.10 are displacement currents C dV/dt, and both are nearly in phase. The PD pulse currents i with crest values in the range of sometimes smaller than 104 A, are not only small in amplitude, but also of very short duration. If no stray capacitance in parallel to CK were present, I would be the same in both branches, but of opposite polarity. For accurate measurements, a shunt resistor with matched coaxial cable may be introduced in the circuit as shown in Fig. 5.11. The voltage across the CRO(or transient recorder) input .Only if the capacitance of the test object is small, which is a special case, will the voltages referring to the PD currents i be clearly distinguished from the displacement currents i

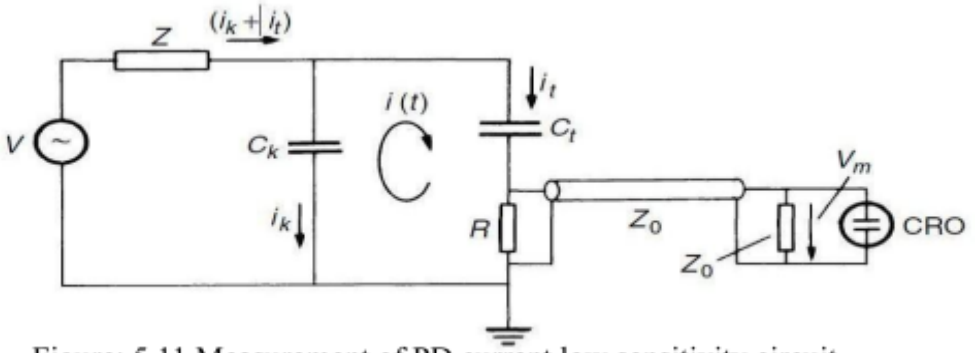

Figure: 5.11 Measurement of PD current low sensitivity circuit

Improvements are possible by inserting an amplifier (e.g. active voltage probe) of very high bandwidth at the input end of the signal cable. In this way the signal cable is electrically disconnected from R. High values of R,however, will introduce measuring errors, which are explained with Fig. 5.12.A capacitance C of some 10 pF, which accounts for the lead between Ctand earth as well as for the input capacitance of the amplifier or other stray capacitances, will shunt the resistance R and thus bypass or delay the very high-frequency components of the current i. Thus, if i is a very short current pulse, its shape and crest value are heavily distorted, as C will act as an integrator. Furthermore, with R within the discharge circuit, the current pulse will be lengthened, as the charge transfer even with C D 0 will be delayed by a time constant RCtCK/Ct C CK. Both effects are influencing the shape of the original current pulse, and thus the measurement of i is a tedious task and is only made for research purposes.

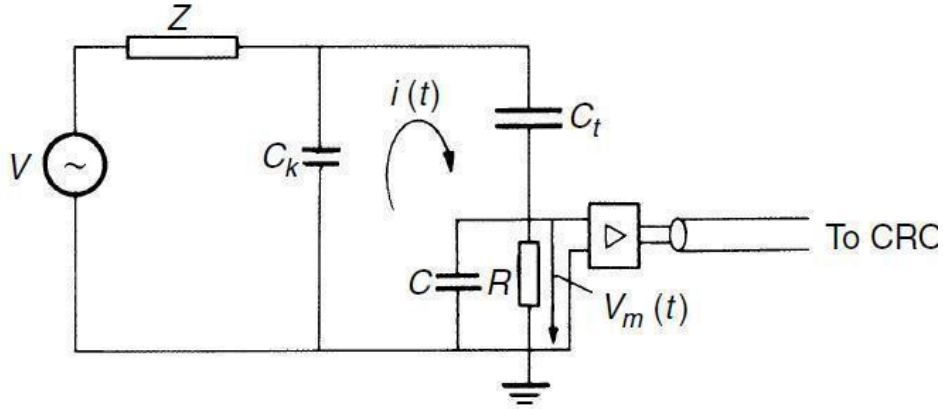

Figure: 5.12 Measurement of PD currents – high sensitivity circuit

All measured data on current shapes published in many papers are suffering from this effect. One may, however, summarize the results by the following statements. Partial discharge currents originated in voids within solids or liquids are very short current pulses of less than a few nanoseconds duration. This can be understood, as the gas discharge process within a very limited space is developed in a very short time and is terminated by the limited space for

movement of the charge carriers. Discharges within a homogeneous dielectric material, i.e. a gas, produce PD currents with a very short rise time5nsec and a longer tail. Whereas the fast current rise is produced by the fast avalanche processes the decay of the current can be attributed to the drift velocity of attached electrons and positive ions within the dielectric. Discharge pulses in atmospheric air provide in general current pulses of less than about 100 nsec duration.

Longer current pulses have only been measured for partial discharges in fluids or solid materials without pronounced voids, if a number of consecutive discharges take place within a short time. In most of these cases the total duration of I is less than about 1 μsec, with only some exceptions e.g. the usual bursts of discharges in insulating fluids. All these statements refer to test circuits with very low inductance and proper damping effects within the loop CK Ct. The current I however, may oscillate, as oscillations are readily excited by the sudden voltage drop across Ct. Test objects with inherent inductivity or internal resonant circuits,e.g. transformer or reactor/generator windings, will always cause oscillatory current pulses. Such distortions of the PD currents, however, do not change the transferred charge magnitudes, as no discharge resistor is in parallel to CKor Ct. To quantify the‘ individual apparent charge magnitudes‘ qi for the repeatedly occurring PDpulses which may have quite specific statistical distributions, a measuring system must be integrated into the test circuit which fulfils specific requirements. Already at this point it shall be mentioned that under practical environment conditions quite different kinds of disturbances (background noise)are present, which will be summarized in a later section. Most PD measuring systems applied are integrated into the test circuit in accordance with schemes shown in Figs 5.13 (a) and (b), which are taken from the new IEC Standard31 which replaces the former one as issued in 1981.Within these _straight detection circuits‘, the coupling device _CD‘ with its input impedance Zmi forms the input end of the measuring system. As indicated in Fig. 7.20(a), this device may also be placed at the high-voltage terminal side, which may be necessary if the test object has one terminal earthed. Optical links are then used to connect the CD with an instrument instead ofa connecting cable _CC‘.

Some essential requirements and explanations with reference to these figures as indicated by the standard are cited here: the coupling capacitor Ck shall be of low inductance design and should exhibit a sufficiently low level of partial discharges at the specified test voltage to allow the measurement of the specified partial discharge magnitude.

A higher level of partial discharges can be tolerated if the measuring system is capable of separating the discharges from the test object and the coupling capacitor and measuring them separately; the high-voltage supply shall have sufficiently low level of background noise to allow the specified partial discharge magnitude to be measured at the specified test voltage; high-voltage connections shall have sufficiently low level of background noise to allow the specified partial discharge magnitude to be measured at the specified test voltage; an impedance or a filter may be introduced at high voltage to reduce background noise from the power supply.

The main difference between these two types of PD detection circuits is related to the way the measuring system is inserted into the circuit. InFig.5.13 (a), the CD is at ground potential and in series to the coupling capacitors as it is usually done in praxis. In Fig. 5.14(b), CD is in series with the test object Ca.

Here the stray capacitances of all elements of the high-voltage side to ground potential will increase the value of Ck providing a somewhat higher sensitivity for this circuit according to eqn . The disadvantage is the possibility of damage to the PD measuring system, if the test object fails. The new IEC Standard defines and quantifies the measuring system characteristics. The most essential ones will again be cited and further explained below:

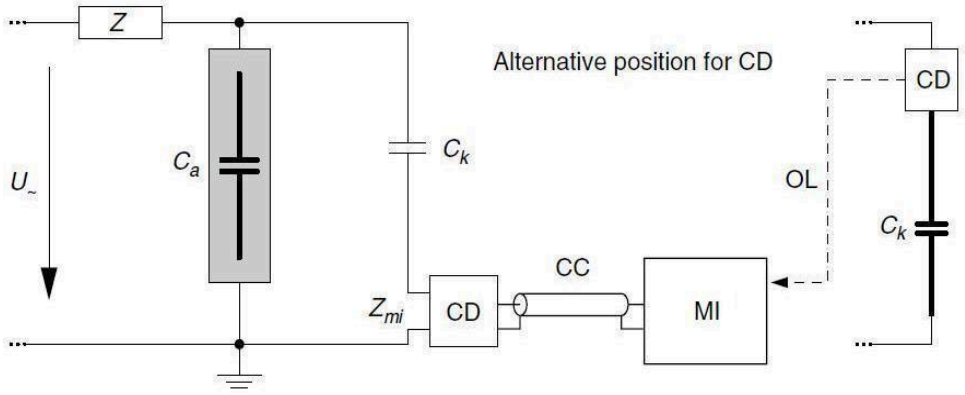

Figure:5.13 (a) Coupling device CD in series with the coupling capacitor

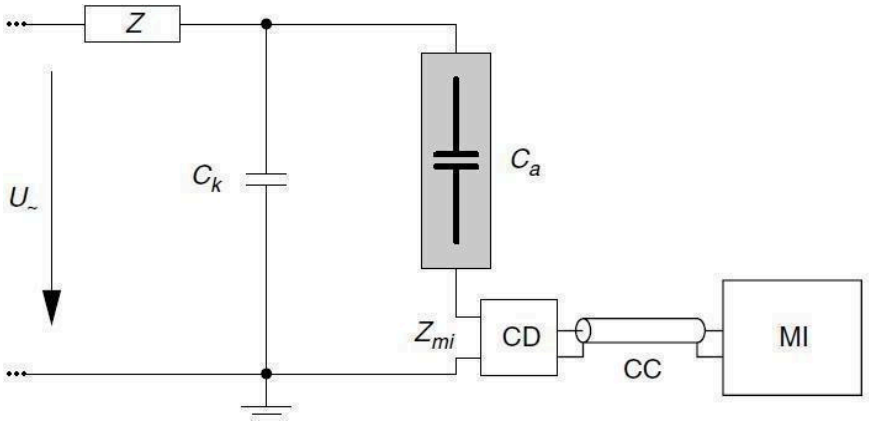

(b) Coupling device CD in series with the test object

Figure: 5.14 Basic partial discharge test circuits – 'straight detection'

The transfer impedance Zis the ratio of the output voltage amplitude to a constant input current amplitude, as a function of frequency f, when the input is sinusoidal. This definition is due to the fact that any kind of output signal of a measuring instrument (MI) as used for monitoring PD signals is controlled by a voltage, whereas the input at the CD is a current. The lower and upper limit frequencies f1 and f2 are the frequencies at which the transfer impedance Z has fallen by 6 dB from the peak passbandvalue.Midband frequency fm and bandwidth of: for all kinds of measuring systems, the midland frequency is defined by:

$$f_m = \frac{f_1 + f_2}{2}$$

and the bandwidth by:

$$\Delta f = f_2 - f_1;$$

The superposition error is caused by the overlapping of transient output pulse responses when the time interval between input current pulses is less than the duration of a single output response pulse. Superposition errors may be additive or subtractive depending on the pulse repetition rate n of the input pulses. In practical circuits both types will occur due to the random nature of the pulse repetition rate. This rate _n' is defined as the ratio between the total number of PD pulses recorded in a selected time interval and the duration of the time interval.

The pulse resolution time Tr is the shortest time interval between two consecutive input pulses of very short duration, of same shape, polarity and charge magnitude for which the peak value of the resulting response will change by not more than 10 per cent of that for a single pulse. The pulse resolution time is in general inversely proportional to the bandwidth of the measuring system. It is an indication of the measuring system's ability to resolve successive PD events. The integration error is the error in apparent charge measurement which occurs when the upper frequency limit of the PD current pulse amplitudespectrumis lower than (i) the upper cut-off frequency of a wideband measuring system or (ii) the mid-band frequency of a narrow-band measuring system. The last definition of an _integration error' will need some additional explanation. PD measuring systems quantifying apparent charge magnitudes are band-pass systems, which predominantly are able to suppress the high-power frequency displacement currents including higher harmonics. The lower frequency limit of the band-pass f1 and the kind of _roll-off' of the bandpasscontrol this ability. Adequate integration can thus only be made if the' pass-band' or the flat part of the filter is still within the constant part of the amplitude frequency spectrum of the PD pulse to be measured. Figure 5.14,

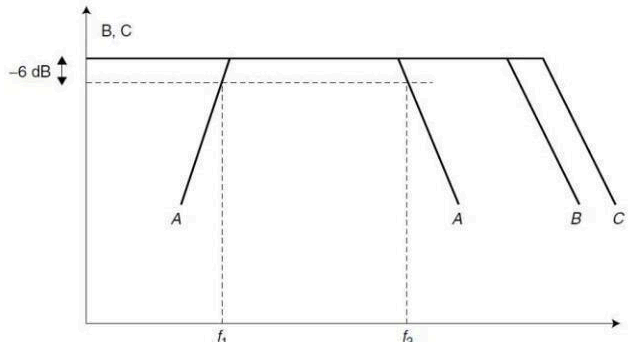

Figure: 5.15 Correct relationship between amplitude and frequency to minimize integration errors for a wide-band

- system A band-pass of the measuring system
- B amplitude frequency spectrum of the PD pulse
- C amplitude frequency spectrum of calibration pulse
- f1 lower limit frequency
- f2 upper limit frequency

Again taken from the new standard, provides at least formal information about correct relationships. More fundamental information may be found within some specific literature.

5.4 RADIO INTERFERENCE DUE TO HIGH VOLTAGE INSULATOR STRING Sources of corona on line conductors and hardware

The local electric breakdown of air or the corona is quite common on the high voltage power transmission line hardware. The operating stress is ideally lower than the corona inception levels, however, due to some manufacturing defects, damages caused during the transportation and installation, deposition of contaminants like dust particles or water droplets etc. the local field can get significantly intensified. As a result, the corona can occur on line conductors, nuts and bolts of the hardware, arcing horns, guard rings, suspension clamps, etc. Also, since the conductors and tie-wires with the tops of the insulator; and the pins with the entire surface of the thread in the pin holes, do not make perfect electrical contacts, corona may occur in the intervening air gaps.

The generation mechanism of Radio noise

Radio noise in High Voltage transmission line is associated with the pulsating modes of corona discharges developing at the line conductor and hardware, sparking resulting from poor electrical contact and scintillations on the contaminated insulator surfaces. The current pulse associated with individual corona discharges typically possess a rise time measurable in 10s of ns, which is followed by a slow tail measured in 100s of ns. A several discharges are produced in every half cycle of the power frequency voltage and there could be several sites producing corona and the noise generated has considerably wide frequency spectrum. The RI level is high in the broadcast frequency range (0.5-1.6MHz) and then decreases gradually at higher frequencies. Detailed studies of corona current characteristics have shown that positive corona is the main source of radio noise from transmission line.

Consequence of radio noise:

The Radio Interference (RI) from electric power transmission line hardware, if not controlled, poses serious electromagnetic interference to system in the vicinity Also, in future, if the transmission lines are to be employed for general communications, it becomes imperative to limit the corona generated electromagnetic noise .With regard to the transmission lines, the sources of RI are both line conductors and the line hardware including the insulator strings . The present work mainly concerns with the insulator string along with the associated line hardware.

The existing standards have two tests pertaining to RI and corona. First one involves measurement of conducted RI through suitable circuit configuration and a radio noise meter. The second one involves identification of onset a visual corona, which is relatively subjective.

Associated standard:

Hence, governing standards have prefixed upper limits for radio interference levels from different components of high voltage transmission lines. For convenience, the laboratory testing for the RI levels are carried out through the measurement of the conducted radio interference levels.

Problem identification

The RI measurement does not really locate the coronating point, as well as, the modes of corona. At the same time experience shows that it is rather difficult to locate the coronating points by mere inspection. The associated geometry involves both highly localized field intensification points, as well as, relatively extended moderate field intensification points. This in turn leads to both point corona and a diffuse corona to start with, which later transform into Details of experimental investigationsExperimental arrangement commonly used test circuits for measuring radio interference are those recommended by IEC and NEMA. For the present work the IEC circuit shown in Figure 1 is employed.

The main components of the circuit are high voltage source (50 Hz, 150 kV, 300 kVA transformer with primary voltage of 230/440 V and with a rated continuous current of 2A), low pass filter which can be tuned to the required frequency, high voltage bus end terminations, coupling capacitor (0.00161 realised by two units of 0.00322 F of GE make connected in series), measuring impedance radio noise meter type SMV 11, VEB Messelektronik Berlin make is used for the measurements. The input voltage to the transformer is 400 V two phase ac. The testing arrangement is so designed to be simpler for operation and all the necessary precautions have been incorporated for proper safety and protection with essential tripping arrangements. The test object consisted of 9-disc insulators(132kV system) and the test voltage was 85kV

Radio Interference Measurements

The International Standard specifies the procedure for a radio interference (RI) test carried out in a laboratory on clean and dry insulators at a frequency of 0,5 MHz or 1 MHz or, alternatively, at other frequencies between 0.5 MHz and 2 MHz. The frequencies of 0.5 or 1 Mhz are preferred because, usually the level of radio noise at this part of the spectrum and also because 1 MHz lies between the low and medium frequency radio broadcast bands. As per the standard , the measuring apparatus, as per the specification of CISPR 16-1, has been currently used for the RI characteristics of insulators.

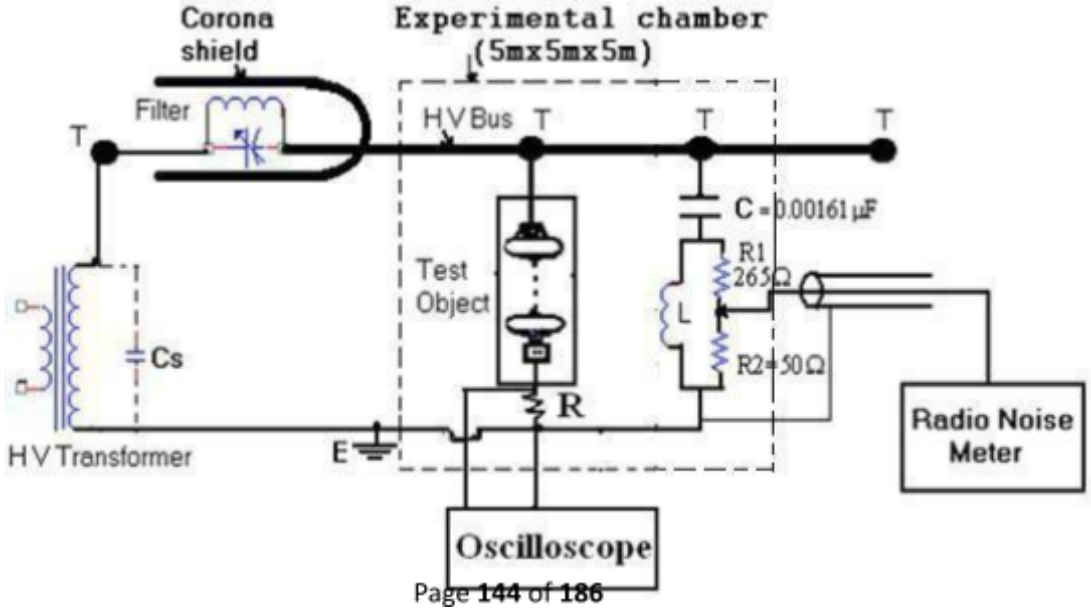

Figure: 5.15. RIV measuring circuit as per IEC augmented with ground end current measurement

The voltage is gradually applied in steps, to reach a value of 90 kV (15% above phase voltage), held for at least five minutes, to allow RIV phenomenon to stabilize. Then, voltage is reduced slowly in steps. The radio noise generated by the insulator string is observed. Three such cycles are repeated, and RIV in dB (above 1 mV) at different voltages is recorded for four insulator strings. The experiments were repeated at least five times to check for repeatability.

Current Measurements

The corona current in principle is measurable at two ends of the string i.e. from high voltage end and from ground end. Of course, for very accurate measurements, optical link between measuring system and the oscilloscope would be essential. At present, due to the non-availability of such a system at our laboratory, conventional method is only employed. The current is indirectly sensed by measuring the voltage across a 50 Ω resistor connected at the ground end. It applies to both the ground end lead of insulator string, as well as, the input to RIV.meter as indicated in the figure. However, for safety purpose, in the ground end lead of insulator string a high resistance 5 kΩ is also inserted. However, before proceeding further on measurement, the following needs to be discussed.

The corona current pulses are known to have short front durations measured in 10s of ns. As a consequence, their propagation characteristics would be more like waves on antenna rather than classical circuit domain pulses and further, their propagation is not governed by the applied voltages. A very similar situation prevails with the measurement of partial discharge pulses in high voltage power apparatus and cables. Therefore, the quantity measured at any given point on the circuit need not be and will not be the actual corona current pulse generated at the source. Nevertheless, owing to the linearity of the system for such pulses, measured current should be directly related to the corona pulse at the generation point.

Amongst the two possible current measurement points, the investigation is started with measuring the current at the input to RIV meter. The reasons for the same are as follows. Firstly, the reference value as per prevailing standards, the RIV measurement as per the prescribed circuit is the testing method and therefore, the current coupled through the RIV coupling capacitor governs the test result. Therefore, it would be prudent first to consider this current and study whether intended identification of coronating source could be carriedout. Secondly, as mentioned before, the corona pulse will propagate on ground lead in an antenna mode and hence several reflections and attenuation can be expected in the path of the ground lead which has several bends and runs along supporting steel frame. It will therefore be quite involved to correlate the signal strength at the RIV input. Considering these, first the input to the RIV meter itself is considered for its characteristics.

5.5 INTERNATIONAL AND INDIAN STANDARDSDC TESTING TEST VOLTAGE

For different transmission voltages, the test voltages required are given in the following Tables**:**

Table 5.2

Test voltages for a.c equipments

System voltage Kv(rms)	Power Frequency Test Voltage Kv(rms)	Impulse Test voltage Kv(peak)	Switching stage withstand voltage
400	520	1425	875
525	670	1800	1100
765	960	2300	1350
1100	1416	2800	1800
1500	1920	3500	2200

Table 5.3

Test voltages for d.c equipments

Normal voltage	D.C Withstand Voltage	Impulse Test voltage Kv	Switching stage withstand voltage Kv
±400	800	1350	1000
±600	1200	1900	1500
±800	1600	2300	1500

Table 5.4

Test voltages required for different d.c. system voltages

Normal voltage	D.C Voltage kv	Impulse Test voltage Kv	Switching stage withstand voltage Kv
±400	800	1750	1300
±600	1200	2500	2000

±800	1600	3000	2600

Table 5.5

Approximate dimensions of the testing equipment and the equipment to be tested

Normal voltage (rms)	**AC transformer height (m)**	**Impulse generator height (m)**	**Dimension of test object**
400	10	6	7×2×11
765	15	8	11×2×17
1100	18	12	17×2×24
1500	22	15	28×2×28

Location	**Dimension**	**Power frequency**	**Impulse Test voltage Kv**	**Switching surge voltage**
		Voltage kv		**Mv**
Australia	67×35×35	1.5	8.0	–
Bharat Heavy Elect, Bhopal, India	150×75×55	1.5	3.6	2.0
		2.3	4.8 (200KJ)	3.0
CESI-Milan, Italy	25×15×15	0.3	1.2	–
College of Engineering Guindy, madras	33×26×30	0.5	1.4 (16 KJ)	–
College of Engineering Jabalpur (MP)	20×12×8	0.5	1.4 (16KJ)	–
College Of Engineering				

Table 5.6

International and Indian standards

Kakinda,AP				
Electricity DC France	65×65×45	2.5	7.2 (1010 KJ)	6.0
Hydro-Quebec Montreal,	82×68×50	2.5	6.4 (400 KJ)	6.0
Canada	37.5×25×19	1.05	3.0	1.6
Indian Instt.of Technology			(50 KJ)	
Bangalore	28×10×9.7	0.80	1.5	--
Indian Instt.of Technology			(36 KJ)	
Madras	115×80×60	3.0	8.0	--
Russia	32×25×21	1.2	3.2	--
Technical				

5.5.1 Insulation Coordination

Insulation Coordination is defined by the values of test voltages which the insulation of equipment under test must be able to withstand. In the earlier days of electric power, insulation levels commonly used were established on the basis of experience gained by utilities. As laboratory techniques improved, so that different laboratories were in closer agreement on test results, an international joint committee, the Nema-Nela Committee on Insulation Coordination, was formed and was charged with the task of establishing insulation strength of all classes of equipment and to establish levels for various voltage classification. In 1941 a detailed document18 was published giving basic insulation levels for all equipment in operation at that time. The presented tests included standard impulse voltages and one-minute power frequency tests.

In today‘s systems for voltages up to 245 kV the tests are still limited to lightning impulses and one-minute power frequency tests, see section 5.3.Above 300 kV, in addition to lightning impulse and the one-minute power frequency tests, tests include the use of switching impulse voltages. Tables 5.2and 5.3 list the standardized test voltages for 245 kV and above ½300 kV respectively, suggested by IEC for testing equipment. These tables are based on a 1992 draft of the IEC document on insulation coordination.

Table 5.7 Standard insulation levels for Range II (Um > 245 kV) (From IEC document 28

CO 58, 1992, Insulation coordination Part 1: definitions, principles and rules)

Highest	Longitudinal	Standard	Phase to phase	Standard

Voltage for	Insulation	lighting	(ratio to phase	lighting

equipment U_m KV (rms Value)	**(+) KV Peak Value**	**withstand voltage phase to earth value (Peak Value)**	**to earth peak value)**	**withstand voltage (Peak Value)**
300	750	750	1.50	850
				950
362	750	850	1.50	950
				1050
420	850	850	1.50	950
				1050
	850	950	1.50	1050
				1175
	850	850	1.60	1050
				1175
525	950	950	1.50	1175
				1300
	950	1050	1.50	1300
				1425
	950	950	1.70	1425
				1425
	950	1050	1.60	1550
				1800
	950	1175	1.50	1675
				1800
	950	1300	1.70	1800
				1425
765	1175	1425	1.60	1675
				1800
	1175	1550	1.70	1800

	1175	1425	1.60	1950 1950 2100

5.5.2 Statistical approach to insulation coordination

In the early days insulation levels for lightning surges were determined by evaluating the 50 per cent flashover values (BIL) for all insulations and providing a sufficiently high withstand level that all insulations would withstand. For those values a volt–time characteristic was constructed. Similarly the protection levels provided by protective devices were determined. The upper curve represents the common BIL for all insulations present, while the lower represents the protective voltage level provided by the protective devices. The difference between the two curves provides the safety margin for the insulation system. Thus the Protection ratio=Max. Voltage it permits/Max.

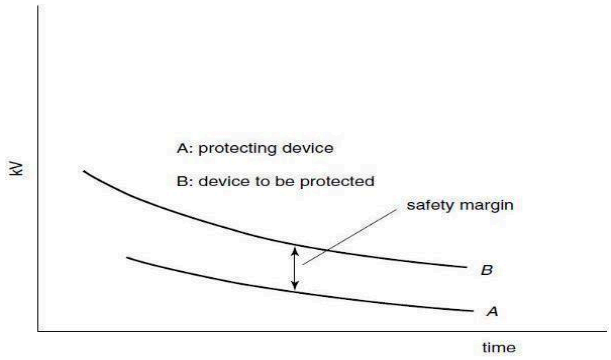

Figure: 5.16 Coordination of BILs and protection levels (classical approach)

This approach is difficult to apply at e.h.v. and u.h.v. levels, particularly for external insulations. Present-day practices of insulation coordination rely on a statistical approach which relates directly the electrical stress and the electrical strength. This approach requires knowledge of the distribution of both the anticipated stresses and the electrical strengths. The statistical nature of over voltages, in particular switching over voltages, makes it necessary to compute a large number of over voltages in order to determine with some degree of confidence the statistical over voltages on a system. The e.h.v. and u.h.v. systems employ a number of non-linear elements, but with today‘s availability of digital computers the distribution of over voltages can be calculated. A more practical approach to determine the required probability distributions of a system‘s over voltages employs a comprehensive systems simulator, the older types using analogue units, while the newer.

Employ real time digital simulators (RTDS).For the purpose of coordinating the electrical stresses with electrical strengths it is convenient to represent the overvoltage distribution in the form of probability density function (Gaussian distribution curve as shown in Figure) and the

insulation breakdown probability by the cumulative distribution function. The knowledge of these distributions enables us to determine the _risk of failure‘. If Va is the average value of overvoltage, Vk is the kth value of over voltage, the probability of occurrence of overvoltage is p0Vk du, where as the probability of breakdown is PbVkor the probability that the gap willbreak down at an overvoltage Vk is PbVkp0Vk du. For the total voltage range we obtain for the total probability of failure or _risk of failure‘.

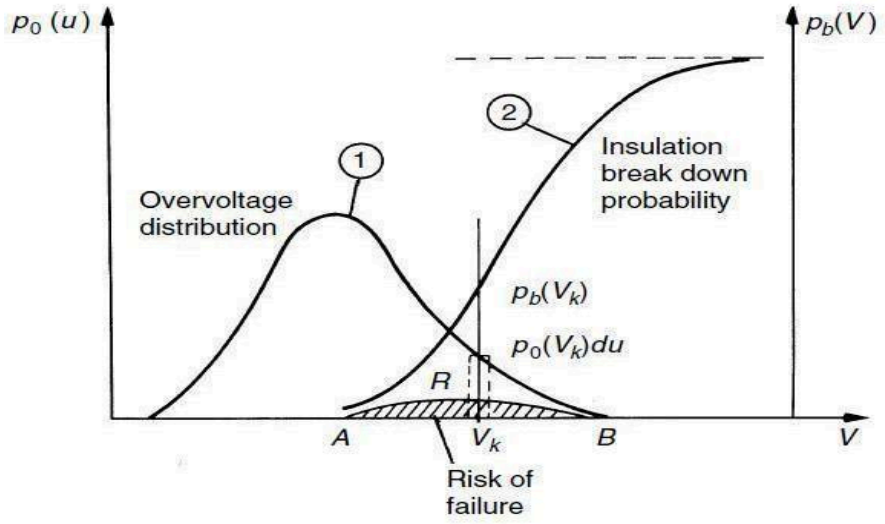

Figure: 5.17 Method of describing the risk of failure.

1. over voltage distribution–Gaussian function. 2. Insulation breakdown probability–cumulative distribution)

$$R = \int_0^\infty Pb(Vk)P0(Vk)du$$

The risk of failure will thus be given by the shaded area under the curve R. In engineering practice it would become uneconomical to use the complete distribution functions for the occurrence of overvoltage and for the withstand of insulation and a compromise solution is accepted as shown in Figs 5.18 (a) and (b) for guidance. Curve (a) represents probability of occurrence of over voltages of such amplitude Vs that only 2 per cent (shaded area) has a chance to cause breakdown. VS are known as the _statistical overvoltage‘. In Fig. 5.18(b) the voltage Vw is so low that in 90 per cent of applied impulses, breakdown does not occur and such voltage is known as the _statistical withstand voltage‘ Vw.

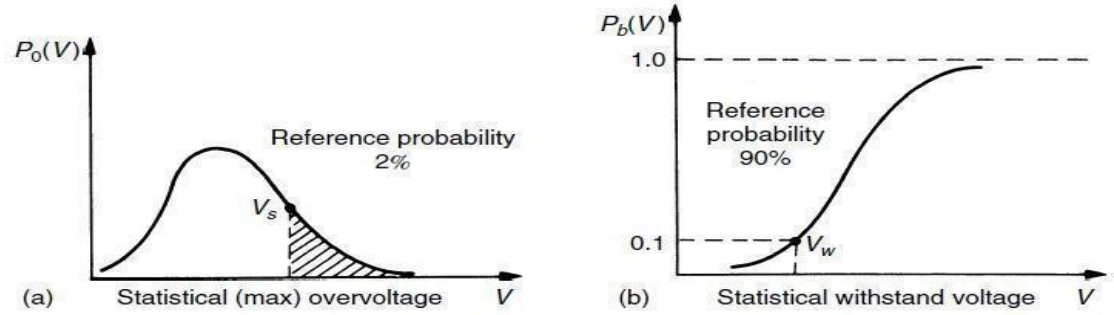

Figure: 5.18 Reference probabilities for overvoltage and for insulation withstand strength

In addition to the parameters statistical overvoltage _VS‘ and the statistical withstand voltage _VW‘ we may introduce the concept of statistical safety factor 4. This parameter becomes readily understood by inspecting Figs 5.19(a) to (c) in which the functions Pb V and p0Vk are plotted for three different cases of insulation strength but keeping the distribution of overvoltage occurrence the same. The density function p0Vkis the same in (a) to (c) and the cumulative function giving the yet undetermined withstand voltage is gradually shifted along the V-axis towards high values of V.

$$\frac{Vw}{Vs} = \gamma$$

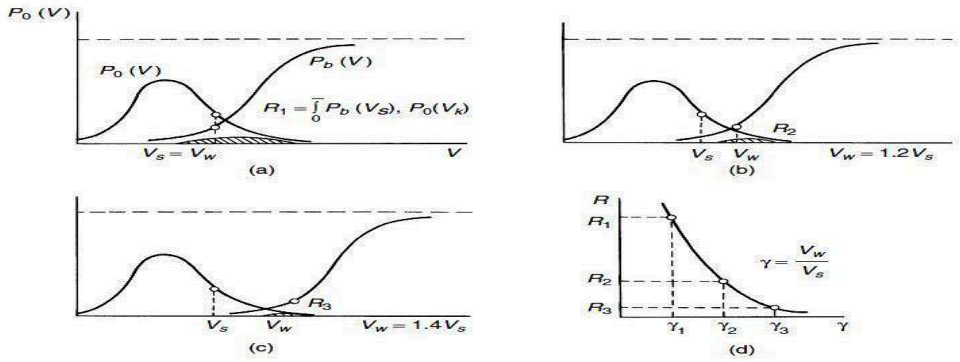

Figure: 5.19 The statistical safety factor and its relation to the risk of failure

This corresponds to increasing the insulation strength by either using thicker insulation or material of higher insulation strength. As a result of the relative shift of the two curves [PbV and p0Vk] the ratio of the values Vw/Vs will vary. This ratio is known as the statistical safety factor.

5.5.3 Correlation between Insulation and Protection Levels

The _protection level‘ provided by (say) arresters is established in a similar manner to the insulation level‘; the basic difference is that the insulation of protective devices (arresters) must not withstand the applied voltage. The concept of correlation between insulation and protection levels can be readily understood by considering a simple example of an insulator string being protected by a spark gap, the spark gap (of lower breakdown strength)protecting the insulator string. Let us assume that both gaps are subjected to the same overvoltage represented by the probability density function p0V,Fig. 5.20. The statistical electrical withstand strength of the insulator string is given by a curve identical to Fig. 5.19 The probability of breakdown of this insulation remains in the area R which gives _risk of failure‘. Since the string is protected by a spark gap of withstand probability.

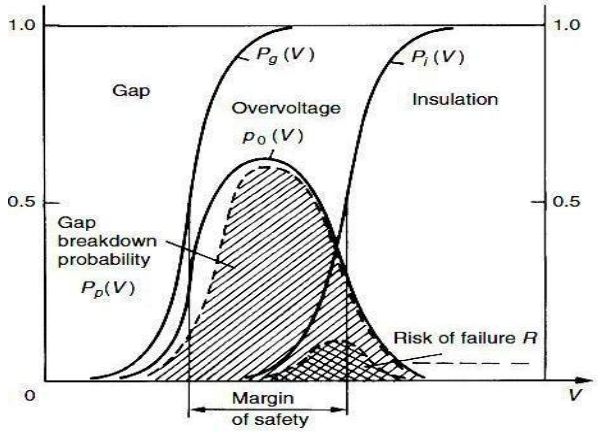

Figure: 5.20 Distribution functions of breakdown voltages for protective gap and protected insulation both subjected to an overvoltage p0 V

PgV, the probability that the gap will operate (its risk of failure) is obtained from integrating the productPgVp0VdV. In Fig.5.11 this probability is denoted (qualitatively) by PPV. As is seen the probability is much higher than the probability of insulation damage or failure R. In the same figure is shown the traditional margin of safety corresponding to the voltage.

SHORT ANSWER QUESTIONS AND ANSWERS

UNIT: I

OVER VOLTAGES IN ELECTRICAL POWER SYSTEMS

1. What are the chief causes of over voltages in electric power system?

1) Lightning over voltages (Natural causes) 2) Switching over voltages (system oriented causes).

2. How are switching over voltages originated in a power system?

Switching over voltages originate in the system itself by the connection and disconnection of circuit breaker contacts or due to initiation or interruption of faults.

3. What are switching over voltages?

Switching over voltages are highly damped short duration over voltages. They are temporary over voltages of power frequency or its harmonic frequencies.

- They are sustained or weakly damped
- They originate in switching and fault clearing process.

4. For ultra high voltages, perhaps, switching surges may be the chief condition for design considerations. Why?

The magnitudes of lighting voltages appearing on a transmission line do not depend on line design hence lightning performance does not improve with increasing insulation level, that is, the system voltage. On the other hand switching over voltages is proportional to operating voltage.

Hence for ultra high voltages switching surges may he the chief condition for consideration.

5. State the parameters and characteristics of the lightning

- strokes: Amplitude of currents
- The rate of rise.
- The probability distribution
- Wave shape of the lightning voltage and current.
- Time to peak value.

6. How are lightning strokes on transmission lines classified.

1) Direct strokes

2) Inducted

strokes Direct stroke:

- When thunder cloud directly discharges on to a transmission line tower or line wires, it is called direct stroke. This is the most severe form and this occurs rarely.

Inducted Stroke:

- When thunder storm generates negative charges at its ground end. The transmission line and Tower develop induced positive charges.
- Normally lines are unaffected, because they are insulated by string insulators. However, because of the high field gradients involved, the positive charge leak from the Tower along the insulator surfaces to the live conductors, after a few micro seconds, (say).

When the cloud discharges through some earthed objects other than the transmission line, huge concentration of positive charge is left with.

- The transmission line and earth act as a huge capacitor.
- This may result in a stroke and hence the name inducted lightning stroke.

7. What is Back Flashover?

Some times when a direct lightning stroke occurs on tower if the tower footing resistance is considerable, the potential of the tower rises to a large value, in view of the huge lightning stroke current, steeply with respect to the line and consequently a flash over may take place, along the insulator string. This is known as Back Flash over.

8. Give the mathematical Model for lightning:
Let Io – lightning current (current
source) Zo – source impedance (of the
cloud) Z - object Impedance
V - Voltage built across the
object Their
V=I.Z
Zo Z + Zo = Io. Z
1 + Z / Zo)
Zo = 1000 to 3000 ohms
(generally) Z = object
Impedance Tr line : 300 to 500
ohms Ground wire :
100-150ohms Tower : 10-50
ohms
Therefore Z/Zo=less and can be
neglected. Therefore V= Io.Z
Where Io = lightning stroke
current Z = surge impedance.
=I0.Z

9. A lightning stroke 10KA strikes a line of 400 ohms surge Impedance. (I) What is the over Voltage caused?(II) If a direct stroke occurs over the top of the unshielded Tr line what is the over voltage?

Case :I
V = Io . Z = 10KA .400 = 4000 kv
Case II
V = Io (Z/2) = 10 x 400 KV =2000KV

10. What is Thunder storm days?

Thunder storm days (TD) (is known as the Iso Keraunic level) is defined as the number of days in a year when thunder is heard or recorded in a particular location,

- The incidence of lightning strikes on Tr. Line / substation in related to T.D.
- T.D is =5 to 10 in Brittan

30 to 50 in USA

30 t0 50 in India

11. What are the Causes for Switching
- surges? Making and Breaking of electric
- circuits. Initiation or termination of
- faults.
- Energisation and de energisation of cables, capacitors, transformer, Reactors, load etc.

12. What are the effects Switching surges on power system:
. Power system has large Inductance and capacitance.
- Switching surges may create abnormal over voltages (six times)
- Switching surges with a high rate of rise of voltage may cause repeated restriking of the arc between the CB contacts and damage the contacts.
  They have high Natural frequency components and damped normal frequency component.

13) Explain the Mechanism of Switching over voltage in EHV system:

Switching over voltage are generated when there is a sudden release of internal energy stored in either in the electrostatic form (in the capacitance) or in the electromagnetic from in the inductance). This happens where

(1) Low inductive current is interrupted (Transformers and reactors)
(2) Small capacitive current interrupted (Unloaded lines)
(3) Ferro resonance condition
(4) Energisation long EHV lines.

14. What are the measures taken to control/ reduce the switching over voltages?

1. One step or multi step energisation of lines by pre insertion of resistors
2. Phase controlled closing of circuit Breakers with proper systems.
3. Drainage of Trapped charges on long lines (by discharging) before the closing of the lines.
4. Limiting over voltage by surge diverters.

15. What are the causes for power frequency over voltage in a system?
1. Sudden loss of loads.
2. Disconnection of inductive loads.
3. Ferranti effects and unsymmetrical faults.
4. Saturation in Transformers.

16. Name the various methods for protection of Transmission lines against lightning over voltages:
1. Shielding the over head line using ground wires.

2. Using ground rods and counterpoise wires

3. Using protective devices like expulsion gap, protector tubes, surge diverters at appropriate places.

17. What is a ground wire in a Transmission System?

- Ground wire is a conductor run parallel to the main conductors of the transmission line supported on the same tower and earthed every equally and regularly spaced towers.
- It is run above the main conductors.
- It shields the line conductors from induced charges and lightning
- discharges. The shielding angle should be less than 30.

18. Distinguish between an expulsion gap and a protector tube/ value type LAS. In the expulsion gap type there is no non linear resistance.

19. What is the purpose of Insulation coordination:

1. Electric Power supply should ensure reliability and continuity
2. At the same time cost should be low
3. A gradation of system Insulation and protective devices operation is needed, keeping in view of the importance and cost of equipments, duration of interruption etc. Hence the need for insulation coordination.

20. The volt ampere characteristics of a non linear resistor used in a surge arrester is given by: $V = K I^n$

Where K and n are constants

n = 0.5 to 0.6 for silicon carbide

n = 0.02 to 0.03 for ZnO

For Silicon carbide n=0.5 to 0.6, which is not enough to limit the power frequency follow on current within limit. Hence spark gaps are used.

Where as for ZnO, the characteristics is such that even without the spark gap, the current value can be limited within the value (gapless lightning arrestors).

21. Give the wave shape of a standard lightening impulse and a standard switching impulse voltage:

Standard lightning impulse voltage

1) Vp = Peak value, Tolerance ±3%
2) Tf = front time1.2 μs }30%
3) Tt = tail time: 50 μs }20%

Standard switching impulse voltage

1) Vp : Tolerance ±3%
2) Tf : 250 ± 20%
3) Tt : 2500 ± 60%

22. For proper protection how should the ground wire be positioned?

- They should be positioned at a height above line conductors such that they intercept the lightning stroke.

- The phase Conductor should be in the protected Zone: within a quarter circle with the radius = the ground clearance and centre at ground wire
- The shielding angle should be <300
- There should be no side Flash over
- Tower footing resistance should be low to prevent back Flesh over.

23. What are counter poise wires ?

Horizontal wires buried at a depth of 1m in the ground, they may be parallel to the conductors or radial from the tower footing

They are to reduce tower footing resistance.

24. What are ground rods ?

Additional rods provided driven into the ground near the tower footing and connected to the tower footing to reduce the tower footing resistance [15 mm dia,3.0 m long, 10 to 16 rods].

25. What are the characteristics of an ideal surge diverter?

1) When the line voltage is less than the limiting value the leakage current should be zero.
2) When the line voltage exceeds the limit, it should offer zero impedance irrespective of the wave shape, so that the surge voltage is by passed.
3) Immediately after the passing of surge, and immediately after Normal voltage is returned, it should act again as a perfect insulator.

26. What are the design considerations for LAS for EHV application:

1. Rate of rise of voltage
2. The type of system, whether effectively earthed or grounded through an insulator etc.
3. The operating condition of the arrester.

27. What is valving off voltage?

Below this voltage, the LAS will not conduct. Valving off voltage should be greater than the Normal voltage (power frequency).

Otherwise there will be continuous flow of power frequency run current and hence heat and destruction.

28) What is the Mechanism of generation of switching over voltage:

- Making and breaking of electric circuits of large capacitance and Inductance for example Transmission line.
- De energisation of reactive loads like power transformer (unloaded) reactors in (inductance)
- The above constitute, sudden release of internal energy stored in Electrostatic form (in capacitance) and in Electromagnetic form (in Inductance) and causes switching surge.
  Amplitude : 2 to 3.3 pu
  Duration : 1 to 10 ms
  The over voltage has high Natural frequency component and damped normal frequency

component.

29. What are the purposes of providing ground wire protection for transmission lines?

1. Ground wires are placed above Transmission line, suitable shielding angle is provided, when the thunder clouds come near the Tr line, since the base of the cloud has –ve charges, +ve charges are induced in the ground wire. These induced charges are drawn to the ground since ground wires are earthed periodically. Consequently potential rise will be small and hence induced lightning stroke can be prevented. Hence the frequency of lightning stroke is reduced.

2. When lightning strokes, takes place traveling waves are generated, they move. Correspondingly over voltages are induced in the ground wires, which will oppose the traveling waves and Flattening of the High voltage curve on the transmission line.

30. Why ground rods are provided?

1) To reduce Tower footing Resistance
2) A number of rods of 15mm dia , 2.5 m to 3.0 m long driven to the ground up to say 50m, in hard soils.
3) They are interconnected and connected to the tower footing.
4) Reduction in tower footing resistance reduces the surge impedance of the Tower and back flash over.

31. Give the equivalence circuit of a surge diverter. VTh - Open circuit voltage at junctions. Zth - Thevinins equivalent Impedance

S - Surge diverter.

32. What are the disadvantages of spark gap surge diverter?

1. Depends on atmosphere conditions
2. Arc cleaning to be done after surge flow.
3. For the same voltage peak, the gap to be set for lightning over voltage is lesser than the gap to be set for switching over voltage and hence if we set a spark gap surge diverter for lightning over voltage, frequent flashover occurs for switching surge even if the peak voltage is lesser than the set value.

33. What are the characteristics of an ideal surge diverter?

1. When the line voltage is less than the limiting value, leakage current should be zero. Perfect insulator and impedance is infinite.
2. When the line voltage exceeds the limit, it should offer zero impedance and irrespective of the voltage shape it should by pass the voltage.
3. After the surge is bypassed & immediately after normal voltage is restored, once again is should act as an insulator.

34) How are the above characteristics are obtained in practice?

One or more air gaps with a suitable non linear resistance can produce the above characteristics.

UNIT: 2
Electrical breakdown is gases, solids& Liquids

1. Name a few gases used as insulation medium

N2, CO2, CC2F2 (Freon), SF6 (Sulphur Hexa Fluoride)

2. Name the theories explaining B.D in gaseous insulation:

1) Town sends Theory
2) Streamer Theory.

3. What are the physical conditions governing ionization mechanism in gases dielectrics?

1) Pressure
2) Temperature
3) Electrode configuration
4) Nature of electrode surface
5) Availability of initial conducting particles

4) What is primary ionization?

Electron produced at the cathode by some external means, during its travel towards the anode due to the field applied, make collisions with neutral atoms/molecules and liberate electrons & positive ions. The liberated ions make future collisions and the process continue. The electrons and the ions constitute current.

This process is called primary ionization.

5) What is secondary ionization?

- The librated positive ions, during the primary ionization process migrate towards cathode bombard and emit secondary electrons from the cathode.
- The excited atoms/molecules, got excited during the collision of initial electrons, emit photons which bombard the cathode & emit secondary electrons
- Metastable (excited particles) bombard the cathode metal surface & produce secondary electrons
- The secondary electrons released as above make ionization collisions & produce additional electrons. The electrons again produce ionization collisions & the process repeats. This is called & secondary ionization. The discharge is self sustained because once the secondary electrons are formed. They take care of the situation.

Where there are initial electrons at cathode or not ionization proceeds. That is called self sustained discharge.

6. Define primary ionization co-efficient □.(Town-sends Ist ionization co-efficient)

The average number of ionizing collisions made by an electron per centimeter travel of the electron in the direction of the field is called Town-sends Ist ionization co-efficient .It depends on the gas pressure and E/P.

7. Demerits of Town-sends theory:

1. Beyond a p.d > 1000 torr cm, this theory does net explain correctly.
2. Town sends theory says that current growth depends on ionization. But actually it depends on gas pressure and geometry of gap.
3. Town sends mechanism predicts time lag of 10-5 sec. But actually the time lag is 10-8 sec.
4. The discharge form is not as the one predicted by Town-sends theory. It is filamentary & irregular and not "diffused form" as predicted by town-sends.

8. Streamer theory is based on what?

- Streamer theory considers the influence of space charge on the applied
- field. Secondary avalanches are produced from the gap
- Transformation from avalanche to streamer occurs when the length of avalanche exceeds a certain value.
- Streamer theory overcomes the demerits of Town-sends theory.

9 Explain why Electronegative gas has high BD value.

- The molecules of (SF6 gas) electro neg. gases have the property of electron attachment, (i.e., the outermost orbit of the molecules has holes).
- There molecules attach the electrons in the gap to become negative ions
- Negative ions have lesser mobility than electron
- This attachment plays an effective role of removing electrons which otherwise have led to current growth and break down
- Number of attaching electrons made by one electron drifting 1 cm in the direction of the field is called attachment coefficient.

10. Distinguish between BD in uniform field and BD in Non uniform field:

1. In the uniform field, increase in applied voltage produces a Breakdown in the gap in the form of a spark with out any preliminary discharge.
2. In the non uniform field, an increase in applied field, first cause a discharge in the gas around the points where the field is the highest. (Eg. Sharp Points, Curves of electrode). This from of discharge is called corona discharge, which extends finally as the field is increased and bridges the gap between the electrodes ultimately & cause BD.

11. What are the characteristics of corona discharge

1. It has bluish luminence.
2. It produces hissing noise.
3. Air surrounding the corona becomes converted to ozone.
4. Creates loss of Power.
5. Create radio interference.
6. It causes deterioration of the insulation surface.

12. What is corona inception field?

The voltage gradient required to produce visual ac corona in air at a conductor surface is called corona inception field.

13. Nature of corona on certain configuration of Electrodes

1. Transmission line D.C

a. When the voltage is +ive Bluish white sheath over the entire surface of this conductor.

b. When the voltage is –ive Reddish glowing spots distributed along the length

2. Point to plane configuration

a. When the point is positive

Corona current increases steadily with voltage, after a point current becomes pulsed with repetitive frequency of 1 KHz, the burst composing of small bursts, burst corona, ultimately leading to BD.

b. When the point is -ive

Corona appears as current pulse called Trichel pulses.The reception frequency is proportional to applied voltage and inversely proportion to pressure.

3. Sphere-Plane Configuration:

a. For small space – Uniform field

b. For fairly large spacing – The field is non uniform

c. For larger spacing

- The field is non uniform

- Corona inception field is proportional to the diameter of the sphere.
- B.D precedes corona.
- Corona is controlled by spacing.

4. Rod to Rod

1. BD Voltage higher when –ive
2. BD voltage depends on humidity of air.
3. The field is highly non uniform.

5. Sphere to sphere gap

1. Field is uniform up to the paint gap <d2
2. BDV does not depend on humidity and voltage wave form.
3. Formative time lag is small.
4. Used for HV measurement.

17. What is Paschens Law?

Paschans law explains the relationship between the Break Down voltage and the product of pressure (p) and gap (d), in the case of Breakdown in gas.

It states that,

$V = f(p.d)$

The Breakdown voltage is a function of p.d. Derivation

We Know

Condition for BD as per Town sends theory is

$[e/d - 1] = 1$

We know $d = f1 (E/p)$ of $E = f2 (E/p)$

$E = v/d$

Substituting we have f2 (E/p) e f 1

$(E/p) – 1 = 1$

f2 (V/pd) e f
(V/pd) – 1 = 1
eq.1

eq.1 shows the relationship between V and pd. ie V = f (p.d)

18. What is Vaccum.
- Atmospheric Pressure = 760 torr
- High Vacuum = 1 x 10-3 to 1 x 10-6 torr
- Very high Vacuum = 1 x 10-6 to 1 x 10-8 torr
- Ultra Vacuum = 10 x 10-8 torr & below For
- electrical Insulation purposes
- Vacuum => High Vacuum
  - ⇨ 1 x 10-3 torr to 1 x 10-6 torr.

19. Basic of BD in Vacuum
- There is no gas molecule in vacuum
- No collision – the initial electron crosses the gap without any collision.
- Hence BD not possible, (theoretically)
- But actually when applied voltage is very high somehow beyond a very high applied voltage due to some or other reasons gases are librated inside the chamber causing BD.

20. What are the various factors affecting B.D. in
- vacuum medium. Gap length
- Geometry & material of electrode. Surface
- uniformity of the electrode Treatment of the
- surface (Surface treatment)
- Presence of extraneous particles & residual gas pressure in the gap.

21. Name the various mechanisms explaining Vacuum Break Down
- Particle Exchange Mechanism
- Field emission Mechanism
  - o Anode heating Mechanism o Cathode heating Mechanism
- Clump theory

22. What is Time lag for Break Down?

The time difference between the instant of applied voltage and the occurrence of breakdown.

23. What are the requirement of gases for insulation purposes?

1) High dielectric strength
2) High thermal stability

24. What property of SF6 gas is not favorable in electrical approach?

It is not environmentally friendly and it causes global warming. Hence SF6 is used along with Air or other suitable gases.

25. Distinguish between the BD in pure liquid & commercial liquid. Pure liquid Theoretically only possible (hypothetical).

BD is due to Electronic breakdown involving commission of electrons at fields greater than 100 KV/cm. Town-sends type of primary ionization & secretary ionization can be applicable.
Commercial liquid contains suspended particles, bubbles of air or liquid etc.
BD Mechanisms are influenced by these impurities.
BD depends on several factors

- Nature & condition of electrodes.
- Physical properties of liquid.
- The impurities present in the liquid.
- No single theory can explain the BD.

26. What are the parameters that alter the BD strength of

- liquid dielectrics Physical properties like pressure,
- temperature. Dissolved impurities
- Suspended particles.
- Nature & conditions of electrodes

27. Name a few liquid dielectrics

1) Transformer oil
2) Synthetic hydro carbons – (Polyolefin's)
3) Chlorinated hydro carbons:

4) Silicone oils. Alternative to PCB
5) Esters
1) Natural Esters : Castor oil
2) Organic Ester & Phosphate esters (synthetic Esters)
6) Hydrocarbons tetrachloro ethylene & per fluro poly ether.

28. Qualities of good dielectrics (liquid)

1. High heat transfer capacity
2. Good dielectric strength
3. Good chemical satiety

29. BDV of pure liquid depends on what factors

BDV of pure liquid depends on

- Field applied
- Gap separation
- Cathode work function
- Temperature
- Density
- Viscosity
- Temperature of liquid
-

Molecular structure

30. What are the various theories of BD of commercial liquids?
- Suspended particle mechanism
- Cavitations and bubble mechanism
- Thermal mechanism of breakdown
- Stressed oil volume theory

31. What is the principle of stressed oil volume Theory in Breakdown liquids.

The BDV of liquid dielectric depends on the region which is subjected to the highest stress and the volume of liquid contained in the region.

32. What are the characteristics of a good solid dielectric?

1. low dielectric loss
2. high mechanical strength
3. free from gaseous inclusions
4. free from moisture
5. resistance to thermal & chemical degradation
6. High BD Strength.

33. How can solid dielectrics be classified

1. Organic dielectric

e.g. Paper, Wood, rubber

2. In organic dielectric

e.g. mica, glass, porcelain, p v c, epoxy resins, Perspex.

34. What are the various BD Mechanisms for solid dielectrics?

1. Assuming no external influences
    1. Intrinsic BD
    2. Electro Mechanical Fracture Mechanism
    3. Thermal BD
2. Considering the External Influence
    1. Chemical BD
    2. BD due to Tracking & Treeing
    3. BD due to internal discharge.

35. The usual Mechanism of BD in solid dielectric? The usual Mechanism is Thermal BD.

36. What is the cause for long term deterioration & BD in solid dielectrics

The long term deterioration & BD in solid dielectrics is due to Internal discharges.

37. What is meant by Intrinsic strength of a solid dielectric

All extraneous influences have to be isolated and the BD value which depends on the structure of the materials and the temperature is called intrinsic BD strength of solid dielectric.

eg. Poly vinyl Alcohol
at – 1960c : 15 MV/cm (Intrinsic)
& at Normal. Temp : 5 MV/ cm to 10 MV/cm
:.
38. What is 'TRACKING' and 'TREEING' is solid dielectric B.D TRACKING:
Formation of a continuous conduction path across the surface of the insulation mainly due to surface erosion under voltage application is called 'Tracking'.

Water -Conduction path-heat -Drying - Conduction film -
Carbonization -B.D

TREEING

The spreading of spark channels during tracking in the form of the branches of tree is called Treeing.

UNIT – 3
GENERATION OF HIGH VOLTAGES AND CURRENTS

1. What is the necessity for generating high voltages:
Applications like electric microscope, X rays, particle accelerators, Electro static precipitators etc.
- Testing power apparatuses.
- Insulation testing.

2. What are the various methods available for generating High DC voltage?
1. Half & full wave rectifiers.
2. Voltage multiplayer circuits.
   -
   -
3. Van de graaff generators.
4. Electro static generators.

3. What is the expression for average ripple in a Cock- craft Walten voltage multipler. $\delta v = I$
$2n(2n+1) f C 2$
Where δv = total ripple
I = the current
n = number stages
f = frequency of input voltage.

4. What is the expression for regulation (drop in voltage) Δv in a cock croft Walten method? $\Delta v = 2/ f c [(2n3 /3) + (n2 /2) – (n/6)$
Where Δv = voltage drop
f = frequency
c = capacitance
n = number of stages

5. Give the expression for optimum number of stages in a cock croft Walter voltage multiplier.

Where V max = Maximum of voltage
f = frequency c
= capacitance I
= current

6. State the principle of Van de Graaff generator ?

Mechanical energy is directly converted into electrostatic, electrical energy (without any electromagnetic conversion, as in the case of an electromagnetic machine like synchronous generator).

7. How Impulse voltages are produced in the lab?

Capacitors previously charged to DC voltage is discharged into a wave shaping network (LR, R1 R2, R3 or other combination) by closing a switch. This gives the desired output (double exponential wave).

8. What is the principle of Marx circuit.

A bank of capacitors are charged in parallel and then discharged in series into a wave shaping network to produce a lighting impulse voltage, double exponential fast rising & slow decaying voltage.

9. How switching Impulse voltage can be produced in the lab.

1. Impulse generator circuits can be used by suitably modifying the R1 & R2.
2. Power Tr or Testing Tr, excited by dc voltages giving oscillatory wave (Tesla tal)

UNIT – 4
MEASUREMENT OF HIGH VOLTAGES AND CURRENT

1. What is the Specialty of high voltage / current measurement?
    1. Safety of men & materials.
    2. Accuracy
    3. Induction of over voltage, due to stray coupling.
    4. Proper location.
    5. Linear extrapolation not valid.
    6. Electro magnetic interference.

2. Different devices used for High DC voltages.
    1. Series resistance micro ammeter.
    2. Resistance potential dividers
    3. Generating of Voltmeters
    4. Sphere gap & Spark gaps.

3. What are the various methods used for measurement of power frequency AC voltages.
    1. Series impedance ammeter.
    2. Potential dividers, resistance or capacitive Type.
    3. Potential Transformers electromagnetic or C. V. T.

4. Electrostatic voltmeters.
5. Sphere gap.

4. What is the method available for measurement & High frequency AC voltages or Impulse voltages or other rapidly rising voltages?

1. Potential dividers, resistance Type or capacitance Type with CRO.
2. Peak Voltmeter.
3. Sphere gaps.

5. What are the various methods available for measurement of High direct currents?
1. Resistive shunt with mille ammeter
2. Hall effect generators,
3. Magnetic links

6. What are the methods available for measurement of High alternating current?
1. Resistive shunts with milli ammeters
2. Electro magnetic current Transformers.

7. What are the various methods available for measurement of High Impulse currents or High frequency ac or fast rising ac?
1. Resistive shunts
2. Magnetic pot cut meter.
3. Magnetic links
4. Hall Effect generators.
5. Faraday generators.

8. What are the limitations of resistance potential dividers?
1. Power dissipation
2. Source loading
3. Temperature effect & long term stately
4. Sensitivity to Mechanical strain.
5. Direct connection to HV terminals.

9. What is the principle of generating voltmeters?

It is a variable capacitance electrostatic voltage generator, generating current proportional to the applied voltage. It does not absorb power from the voltage measuring source. It is driven by external synchronous / constant speed motor.

Q = charge
C = capacitance
V = voltage applied
I = current
$Q=C.V$
$i = dq/dt = d/dt (CV) = c (dv/dt) +v (dc/dt)$
For a dc voltage V is constant
Then $i = V (dc/dt)$

Capacitance is changed by rotating the dielectric materials with a suitable shape by a constant speed motor.

10. What are the advantages of generating voltmeters?
    1. No source loading
    2. No direct contact with HV terminals.
    3. Scale is linear & extension easy.
    4. Very convenient, to measure voltages for Van de graaff generators.

11. What are the limitations of generating voltmeters?
    1. They require calibrations
    2. Careful construction necessary
    3. Disturbance in mounting make calibrations invalid.

12. What is the condition for using a generator volt meter to measure power frequency High voltage?

The speed of the synchronous motor = Speed of the supply voltage. Or = ½ the speed of the supply voltage)

Here speed means angular velocity

13. What is the principle of electrostatic voltmeter?

In an electrostatic field in a parallel plate configuration consisting of two electrodes, when one of the electrodes is free to move, it will experience a force when voltage is applied and the force is proportional to the squire of the applied voltage.

The force can be measured & from the force, the voltage applied can be calculated using the calibration chart.

$= - \delta/\delta s\ (1/2\ CV2) = - 1/2\ V2\ (\delta C/\delta s)$

$= - 1/2\ V2\ (\delta/\delta s)\ (A\varepsilon 0/s) = -1/2\ V2\ \varepsilon 0A\ (1/s2)$

F =V/s) /2

Since F is proportional to square of voltage applied, it can be used for ac & dc voltage measurement.

14. What is the principle of a 'Sphere gap' for measurement of High voltages?

A uniform field sphere gap will always have a spark over voltage within known tolerance under constant atmospheric conditions. Hence it can be used for measurement of peak value of the voltage. It is independent of the voltage wave form and hence suitable for all types of wave forms, from dc to Impulse voltages of short rise times (Rise time < 0.5 □s) and ac voltages up to 1MHz frequency.

15. What are the factors influencing the spark over voltage of a sphere gap?
    1. Nearby earthed object
    2. Atmospheric conditions and humidity
    3. irradiation
    4. Polarity and rise time of voltage wave forms.

16. What is the principle of Regowski Coil?

If a coil is placed surrounding a current carrying conductor, the voltage signal induced in the coil.

$V2(t) = M \, d/dt \, (I(t))$

When V2(t) is passed through an Integrating network then

$Vm(t) = M \, (1/RC) \int dI(t)/dt = M \, I \, (t)/RC$

When R & C are those of the Integrating circuits.

i.e. $Vm(t) = K \, I \, (t)$

Thus by measuring Vm(t), we can calculate I(t), the current.

17. What are the qualities of a CRO used for measurement of impulse voltage measurements?

1. Sealed tube, hot cathode Type
2. Photo graphic arrangements for recording wave forms.
3. Input voltage range from 5mv/cm to 20v/cm.
4. Probes and attenuators to handle signals up to 600v.
5. Band with and rise time of the CRO should be adequate.
6. Rise time 5 n.s. & band width as high as 500 MHz. may be necessary.
7. Oscilloscopes are fitted with good cameras for recoding purposes, with writing speed 9cm/n.s.
8. Normally provided with internal & external triggering facility.
9. It is necessary that oscilloscope time base should be started before the voltage reaches the deflecting plates. Such facility should be available.

18. What are the qualities of instrument lead and management of Test circuits during Impulse measurement?

The instrument leads and connections etc should be so made that the induced voltage due to stray Pick ups, due to electro magnetic influences are avoided.

19. What are the advantages of CVT, (capacitance voltage transformer)?

1. Simple & easy to install
2. Can be used for relaying also.
3. Can be used as a coupling capacitor for PLCC & relaying.
4. Frequency independency (unlike a conventional electromagnetic potential Transformer).
5. Provides isolation for HV & LV.

21. What are the demerits of a CVT?

1. Introduces Ferro resonance in Power system.
2. Voltage ratio is suptible to Temperature variations.

22. What are the different types of shunts used for impulse voltage measurement?

1. Bifilar flat strip
2. Coaxial shunt
3. Squirrel cage shunt

23. Explain the function of a delay cable in the HV measurements using a CRO.

With rapidly changing signals, the CRO time base should be started before the original signal reaches the CRO y plates otherwise, the signed may be missed by the CRO.

Therefore while measurement, using a CRO, the Triggering of the CRO time base is done directly (X plate) immediately and the signal proportional to voltage /current to be measured is sent through a delay cable to the vertical (Y) plates so that the required delay is obtained.

Delay cable may be a long inter connecting cable 20 to 50m long.

25. What are the criteria required to assess the potential dividers used for High Impulse voltages.

1. The shape of the voltage in the test arrangement should be transferred with out any distortion to the LV side.
2. Simple determination of the transfer function is to be ensured.
3. They should be suitable for Multi purposes, namely: power frequency, switching Impulse, lighting Impulse voltages etc. That is the dividers should have broad band widths.

UNIT – 5
HIGH VOLTAGE TESTING OF ELECTRICAL APPARATUS AND INSULATION CO ORDINATION

1. What are the necessities of High voltage testing?

1. To check whether they are as per the design and as per specifications and standards.
2. To ensure that the HV equipment is able to withstand over voltages produced naturally or within the system.

2. What is the specialty of HV Testing?

1. The H.V. lab requires higher space.
2. Special equipments are required.
3. Special Techniques are required.

3. Name how standards for HV Testing

1. B I S - Bureau of Indian Standards.
2. I E C - International Electro Tech. Commission.
3. B S I - British Standard Institution.
4. I E E E - Instituting Electrical & Electronics Engineering.
5. I S O P - International Standards Organization.
6. A N S I - American Standards Institute
7. C I G R E - International council on large electrical system.
8. ISS - Indian Standard Specifications

4. Definitions

1. What is disruptive discharge voltage?

The Voltage that produces loss of dielectric strength of equipment is called disruptive discharge voltage. In solid-it is called puncture. In liquid or air-it is called Flashover.

2. What is Flashover?

When a loss of dielectric strength occurs inside a liquid or gaseous insulation or along the surface of a solid Insulation, it is called flashover.

3. What is Puncture?

When a loss of dielectric strength occurs inside a solid it is called puncture.

4. What are self restoring and Non self restoring insulation?

Insulation which completely regains its dielectric strength after a disruptive Discharge is called a self restoring insulation. Insulation which does not regain its insulating property after a disruptive discharge is a Non self restoring insulation.

5. What is withstand voltage.

Withstand Test is a Test in which the specified voltage is applied to the test object under specified conditions to check whether the equipment withstands W/o. any discharge/ flash over . The test voltage which is applied to a Test object in a withstand Test is called withstand voltage. It is the voltage that the equipment is capable of withstanding under specified conditions.

6. What is withstand voltage 50% Flashover voltage

The Test voltage which has 50% probability for flashover is called 50% flashover voltage.

7. What is withstand voltage 100% Flashover voltage

The test voltage which causes flashover of the test object at each of its application.

8. Define Creepage Distance:

It is the shortest distance on the contour of the external surface of the insulator that is between the two metal fittings on the insulator.

9. Define AC Test Voltage.

Alternating current voltage of frequency 40 to 60 Hz, approximately sinusoidal (7% deviation is permitted) is called AC Test voltage.

10. Define Impulse voltage.

It is a fast rising slow decaying voltage, characterized by its peak value, time to front and time to half value.

Standard Impulse Voltage

1. Peak : Tolerance ±3%
2. Time to Front : T f 1.2sec ±30%
3. Time to half value : Tt 50sec

±20% Standard Switching Voltage

1. Peak : Tolerance ±3%
2. Time to Front : 250 s ± 20%
3. Time to half value : 2500s ± 60%

11. How are the Testing of insulators classified

1. Type Test

Done whenever a new brand is introduced and a new design is adopted. 2. Routine Test

Whenever the quality of the individual equipment is to be established say at the time of purchase.

12. What are the various High voltage Tests done

- on insulators Power frequency Flashover Test
- Dry Power frequency Flashover Test Wet
- Power frequency Withstand Test (One Minute) Dry
- Power frequency Withstand Test (One Minute) Wet
- Impulse withstand Test Dry
- Impulse Flashover TestDry
- Pollution Testing (Power
- Frequency) Partial discharge Test
- Radio Interference Test.

13. What is meant by atmospheric correction with reference to High Voltage Testing?

Normally HV Tests are done under Normal Temperature, pressure & humidity conditions and then the values are corrected to the following conditions.

Temp : 27oC
Pressure : 1013 Millibar 760 torr
Absolute humidity : 17gram/m3

This is done by applying the following correction factors.

h = humidity correction factor
d = air density correction factor

If Then Where Va = Voltage under Test conditions
& Vs = Voltage under reference atmospheric candidate

Vs = Va x h/d
d = 0.289 b/ (273+t)

b
=
at
m
o
s
p
h
er
ic
P
re
ss

u
re
in
m
il
li
b
ar
t
=
at
m
o
s
p
h
er
ic
te
m
p
in
d
e
g
re
e
C
.
h = Can be obtained form graph.
(Humidity / Dry bulb thermometer reading)

14. What are the various HV Test done on Bushings?
    1. Power frequency
    - Tests Power factor
    - Test Partial Discharge
    - Test 1 Minute W.S.
    - Test Visible discharge Test

2. Impulse Voltage Test

- Impulse with stand Test – Full wave (Positive & Negative Polarity)
- Impulse with stand Test – Chopped wave (Positive & Negative polarity)
- Switching surge Flashover Test
- Impulse Flash over Test under oil.

15. What are the steps for Impulse withstand Test on Power Transformer
    1. Apply one full Impulse of 75% BIL of Power Transformer
    2. Apply one full Impulse of 100% BIL of Power Transformer
    3. Apply Two chopped wave of 100% BIL
    4. Apply one full wave of 100% BIL
    5. Apply one full wave of 75% BIL The Power Tr should stand. Then, it passes the Test.

16. What are the various HV Tests done one circuit Breakers?
    1. Power frequency WS Test, 1 minute, dry.
    2. Power frequency WS Test, wet
    3. Impulse voltage WS Test dry.
    4. Switching impulse WS Test

17. What are the various Tests (HV Tests) done on surge diverters.
    1. Insulation withstand Test, power frequency both dry and wet.
    2. Power frequency voltage spark over Test.
    3. Standard Impulse voltage spark over Test.
    4. Front of wave voltage spark over Test.
    5. Switching Impulse voltage spark over Test.
    6. Residual voltage Test.
    7. Current Impulse withstand Test.
        - o High current
        - o Long duration.
    8. Pressure relief Test (When fitted)
    9. Pollution Tests

18. What is the necessity for measurement of RIV?

Sometimes electrical equipment like power Transformer, conductors, rotating machines etc. produce unwanted electrical signals in the radio frequency range of 150k Hz to 30 M Hz, where as the power frequency being 50 Hz.

These signals affect the communication systems & should be prevented. Hence RIV measurement is necessary.

19. What is meant by insulation co-ordination in EHV power system?

Insulation co-ordination is the grading of the insulation level of

(1) Various equipments in a power system

(2) Various parts of the equipments

(3) Protection devices in such a way that, in the event of a serious over voltage, less vital, less important, less costlier, easy to repair equipment/part of equipment breaks down first and thereby avoiding major breakdown & interruption to consumers, cost of replacement etc.
For e.g.

1. In the event of an over voltage, a string insulator on Transmission line should breakdown before the bushing of a power Transformer.
2. The bushing of the power Tr. should breakdown first before the Breakdown of the winding of the Power Transformer.

20. What is system protection level and its selection depend on what factors?

In the power system, system protection level is established considering the,

1. Location of the station
2. Protection level of arrester
3. Line shielding

21. What is BIL?

The basic insulation levels are reference levels fixed by standards for each voltage levels. Basic impulse levels are reference levels expressed in terms of impulse crest voltage(Vp) with a standard lightning impuse voltage(1.2/50 micro seconds wave) for any apparatus the insulation level as demonstated by suitable tests should be greater than or equal to the BIL.

22. While selecting an equipment for a power system what should he its BIL.when compared to the system protection level.

For any equipment insulation level should be more than the BIL

For proper insulation coordination its insulation level should be greater than the system protection level over the margin determined by the following factor

1. Atmospheric Condition
2. Station Location
3. Protection level of arresters.
4. Importance of the equipments etc.

Hence the system protection level will be less than BIL

UNIT – I OVER VOLTAGES IN ELECTRICAL POWER SYSTEMS

QUESTION BANK **PART A**

1. What are the 2 types of over voltages?
2. Explain the various regions of the cloud.

3. Mention the different theories of charge formation.
4. What does a thunder cloud consist?
5. Mention the requirements for the thunder clouds and charge formation of air currents.
6. What is back flashover?
7. State the parameters and the characteristics of the lightning strokes.
8. Define Isokeraunic level or thunderstorm days.
9. State the factors influence the lightning induced voltages on transmission lines.
10. State the attenuation and distortion of travelling waves.
11. When over voltages are generated in EHV system?
12. What are the causes for power frequency and its harmonic over voltages?
13. What are the uses of shunt reactors?
14. What is ground wire?
15. What is the use of ground wire?
16. What is an expulsion gap?
17. Mention the parts of an expulsion gap..
18. What is a protector tube?
19. How are the insulation level and the protective safety margin arrived?
20. Define Basic Impulse Level.
21. State the main disadvantages of Zinc Oxide arrester.
22. Mention the various insulation levels in a substation?
23. What are surge arresters?
24. What are the various types of surge arresters used for EHV and UHV systems? What are the 2 types of over voltages?

PART-B

1. Explain the mechanism of lightning strokes including high over voltages on transmission line
2. Mention the limitations of using protector tubes for protection against over voltage?
3. Draw a cross sectional views of a non-lineart resistor lightning arrestor and explain its operation. Give a typical of L.A
4. Derive the mathematical model for lightning discharges and explain them
5. Explain the process for power frequency over voltages
6. Explain different methods employed for lightning protection
7. List the drawbacks of expulsion type L.A.
8. Explain about protection of transmission line using search diverters
9. Explain various methods to control switching over voltages
10. What is meant by coefficient of earthing. Explain its implication on the design of insulation of systems?
11. Explain with sketch the various theories of charge generation and discharging a thunder

cloud?

12. Explain what is meant by insulation coordination how are protective devices chosen for optimal insulation level in a power system.

GLOSSARY

1. Thunder Cloud

A thunder cloud consists of super cooled water droplets moving Upwards an large hailstones moving downwards.

2. Ground wire

Ground wire is a conductor run parallel to the main conductor of the Transmission line supported on the same tower and earthed at every equally and regularly spaced towers.

3. Product Tube

It is a device which consists of a rod or spark gap in air formed by the line conductor and its high voltage terminal.

4. Basic Impulse Level

It is defined as the minimum insulation impulse withstands voltage any power equipment or apparatus.

5. Surge Arresters

They are non-linear resistors in series with spark gaps which act as fast switches.

6. Expulsion Gap

It consists of a rod gap in air in air in series with a second gap enclosed within a fiber tube.

7. Lightning Strokes

Amplitude of the current, the rate of rise, the probability distribution them and the wave shapes of the lightning voltages and currents.

8. Scares Theory

Simpson‘s theory is based on the temperature variations in the various regions of the cloud.

9. Over Voltages

The purpose of this Guide is to provide information on transient and temporary over voltages and currents in end-user AC power systems.

10. Clamping Voltage:

Deprecated term. See measured limiting voltage.

UNIT II ELECTRICAL BREAKDOWN IN GASES, SOLIDS AND LIQUIDS

PART A

1. Mention the gases used as the insulating medium in electrical apparatus?
2. What is breakdown voltage?
3. What are the two types of electrical discharges in gases?
4. What is spark breakdown?
5. State the two types of theories which explain the mechanism for breakdown.

- What are collision processes?
- What are the two types of collision?
- What are elastic collisions?
- What are inelastic collisions?
- Give examples of inelastic collisions.
- What is diffusion?
- Define collision cross section.

13. Define the mean free path.
14. What is ionization?
15. What is Townsend's first ionization coefficient?
16. What is Townsend's secondary ionization coefficient?
17. What is an electronegative gas?
18. Mention the different mechanisms for the breakdown in vacuum.
19. What are the classifications of vacuum?
20. Why are liquid dielectrics?
21. Mention some of the applications of liquid dielectrics.
22. Name some examples of liquid dielectrics.
23. What are the different types of solid insulating materials?
24. Name the two types of intrinsic breakdown mechanisms.

PART B

1. What are the factors that influence conduction in pure liquid dielectric and in commercial liquids dielectric(8)
2. Discuss the various mechanism of vacuum breakdown (8)
3. Describe the mechanism of short terms (i) Break down of composite insulations (8)
4. Discuss the current growth in a gas subjected to uniform and non-uniform electric field (8)
5. Discuss Meek's theory of breakdown in gases under (i) non-uniform fields (8)
   (ii) Discuss the phenomenon of thermal break down in solid dielectrics (8)
6. (i)Define intrinsic strength of a solid dielectric material. Explain why intrinsic strength is not fully realized in practice(8)
   (ii) State why the very high intrinsic strength of solid dielectrics is not fully realized in practice. Discuss in detail any one mechanism of breakdown in solid dielectrics
7. Explain various theories which explains break down in commercial liquid dielectrics
8. (i)What is electrical avalanche? How do avalanche give rise to an electrical breakdown in case of town send's type of discharge (12)
   (ii) Derive from the basic the condition for break down in town send's discharge (6)

9. State the criteria for sparking potential and hence obtain the relation between sparking potential and (pd) values (paschens law). Discuss on the nature of variations of sparking potential with (pd) values(16)
10. Explain the different mechanism by which break down occurs in solid dielectrics in practice(16)
11. A Coaxial capacitor is to be designed with an effective length of 20 cm, the capacitor is expected to have a capacitance of 1000 PF and to operated 15KV, 500 HZ. Find the dimension of electrodes assume the dielectric material is having relative permeability of 2.3.
12. Define town send's first and second ionization coefficients. How is the condition for BD obtained in town send's discharge(16)
13. Deduce Townsend's BD criteria. Also define the Townsend's primary and secondary ionization coefficients(16)
14. Explain the characteristics of liquid dielectrics(16)
15. What are preferred properties gaseous dielectrics for high voltage applications? Draw the characteristics of DC BD strength of typical solid, liquid, gas, and vacuum insulators in uniform fields (16)?
16. Explain clearly BD in non-uniform fields and corona discharges?(16)

Glossary

1.Breakdown Voltage -The maximum voltage applied to the insulation at the moment of breakdown

2.Ionization - The process of liberating an electron from a gas molecule with simultaneous production of a positive ion

3. Electronegative Gas -The electrons get attached to form negative ion.

4. Mean Free Path -The average distance between collisions.

5. Liquid Dielectrics -Mixtures of hydrocarbons and are weakly polarized.

6. Tesla Coil -The high frequency resonant transformer

7. Attachment Coefficient -The number of attaching collusions made by one electron drifting one centimeter in the direction of the field.

8. Spark Breakdown - The transition of a non-sustaining discharge into a self-sustaining discharge.

9. Anode coronas - The most convenient electrode configurations for the study the physical mechanism of coronas are hemi spherically capped rod-plane or point-plane gaps.

10. Cathode corona -With a negative polarity point-plane gap under static conditions above the onset voltage the current flows in very regular pulses

UNIT – III GENERATION OF HIGH VOLTAGES AND HIGH CURRENTS
QUESTION BANK

PART-A

1. Specify the rectifier circuits for producing high dc voltages from ac sources.
2. What are the classifications of high voltages?
3. What is regulation?
4. What is a teals coil?
5. What are the uses of high frequency high voltages?
6. Mention the advantages of high frequency transformers.
7. How are impulse waves specified?
8. Mention the circuits to produce impulse waves.
9. Name the multi test sets used for high voltage testing.
10. What is transient voltage?
11. What are the components of a multistage impulse generator?
12. Define the duration of the wave.
13. How are impulse currents of large value produced?
14. How will you generate rectangular current pulses with high magnitudes?
15. Mention the advantage of trigatron gap?
16. What are the components of a trigatron gap?

PART-B

2. What are the different forms of high voltage classified? Explain any one method of Voltage multiplier circuit
3. Draw and explain the circuits for producing impulse waves
4. Discuss with diagrams the operation of van de Graff generator
5. Describe the cascade transformer connection to generate high alternating voltages and Discuss its limitations and features
6. With a neat circuit diagram explain the working principle of a working cock craft Walton voltage multiplier circuit.
7. Give the Mak-circuit multistage impulse generator. How the basic arrangements are Modified to accommodate the wave time controlled resistance?
8. What is the tesla coil? How are dammed high freq. oscillations obtained form a tesla Coil.

2 (i) Describe the circuit arrangement for producing lightning current waveforms

α Explain with neat sketch the principles of operation of resonant transformer for Generating HVAC

9 (i) Explain tripping and impulse generators

(ii) Explain the need for generating high DC voltages (4).

10. (i) what is the importance of control tripping of impulse generators? How is it done using Trigatron gap

(ii) Explain the methods of generating switching surges in laboratories?

Glossary

1.**Regulation-** The change of average voltage across the load from the no Load.

2. **Transient Voltage-** It is an oscillatory wave or a damped oscillatory wave of Frequency ranging for few hundred hertz to few kilo hertz.

3.Tesla coil-The high frequency resonant transformer is called as a tesla Coil**.**

4. **Duration of the wave -**It is defined as the total time of the wave during which the current is at least 10% of its peak value.

5.Trigatron gap- It consists of a high voltage spherical electrode of suitable Size, an earthed main electrode of spherical shape and a Trigger electrode through the main electrode.

6. **Half-Wave Rectifie Circuit-** The simplest circuit for generation of high direct voltage is the half wave rectifier.

7. **Electrostatic Generator-** In electromagnetic generators, current carrying conductors are moved against the electromagnetic forces acting upon them.

8. **Compensation-** As is mentioned earlier, the test transformers are used for testing the insulation of various electrical equipments.

9. **Impulse voltage generator circuits** The introduction to the full impulse voltages as defined in the previous section leads to simple circuits for the generation of the necessary wave shapes.

10. **Tripping** In large impulse generators, the spark gaps are generally sphere gaps or gaps formed by hemispherical electrodes.

UNIT – IV MEASUREMENT OF HIGH VOLTAGE AND HIGH CURRENTS

QUESTION BANK

PART-A

1. Mention the techniques used in impulse current measurements.
2. Mention the problems associated with bifilar strip design.
3. Mention the different ways in which the stray effect is reduced in resistance shunt?
4. Specify the 2 types of arrangements in sphere gaps.
5. State the advantages of Sphere gaps?
6. State the advantages of magnetic potential transformers.
7. How is an electric field is measured?
8. Mention the devices used to measure the d.c electric field strength.
9. Give the advantages of generating voltmeters

PART-B

1. Explain how a sphere gap can be used to measure the peak value of voltages.
2. What are the parameters and factors that influence such voltage measurements?
3. Compare the merits and demerits of measuring
4. (i)Verify high voltage using sphere gaps and potential dividers (8)
   (ii) Describe the generating voltmeter method for measuring high DC voltages and state its Merits and demerits (8)
5. Define 50% disruptive discharge as applied to impulse voltages. Mention the methods adopted to obtain 50% disruptive discharge voltages and discuss any one method in detail.
6. Explain the working principle and operation of electrostatic voltmeter?
7. What are capacitance voltage dividers? Explain
   (i)various capacitance voltages dividers used to measure impulse voltages up to 2MV (10)
   (ii)Explain the methods of measuring high DC currents
8. What is CVT? Explain with phasor diagram how a tuned capacitance voltage transformer can be used for voltage measurement in power system?
9. Discuss various techniques for the measurement of impulse voltage.
10. Tabulate High voltage & High current measurement techniques for different types of voltages and currents (16)

Glossary

1. **Inverted running:** When input to the prime-mover fails, the alternator runs as a synchronous motor and draws some current from the supply

2. **Buchholz Relay:** Gas actuated relay installed in oil immersed transformers for protection against all kinds of faults

3. **Over current relays:** Providing protection mainly against phase-to-phase faults and overloading.

4. **Earth-fault relays**: Providing protection against earth-faults only.

5. **Differential protection**: Currents entering and leaving the bus are totalized, fault occurs, the fault current upsets the balance and produces a differential current to operate a relay

6. **Unbalanced loading:** Different phase currents in the alternator.

7. **Rod Gaps :** A rod gap may be used to measure the peak value of power frequency and impulse voltages.

8. **Electrostatic Voltmeter** The electric field according to Coulomb is the field of forces.

9. **Voltage Dividers :**If the amplitudes of the impulse voltage is not high and is in the range of a few kilovolts.

10. **Potential Dividers:** The resistance potential dividers are the first to appear because of their simplicity of construction, less space requirements, less weight and easy portability.

UNIT-V HIGH VOLTAGE TESTING OF ELECTRICAL POWER APPARATUS QUESTION BANK

PART-A

1. Define routine test.
2. Define withstand test voltage.
3. Define flashover voltage.
4. Name the tests conducted on surge diverters.
5. Give any two classification of test on cables.
6. Explain the porosity test on insulators.
7. Why is the cable meant for a.c system to be tested with dc supply?
8. What is a surge diverter?
9. Define creeping distance.
10. What is the importance of radio interference voltage measurements for extra high voltage power apparatus?
11. Name the test conducted on bushings.
12. Mention the applications of HVDC in high voltage testing.
13. Define partial discharge.
14. What is treeing?
15. What is the function of surge arrester?
16. State the consequences of RIV.
17. What do you mean by radio interference?
18. Define an isolator.
19. Define a circuit breaker.
20. Define 50% flashover.
21. Define 100 % flash over.
22. State 2 standard tests to be conducted on HV Transformers.
23. What does the selection of BIL level for lines depend?
24. Define type test.

PART B

1. (a)How are the protective devices chosen for the optimal insulation level is a power system (b)Explain the following terms:-
   (i)Withstand voltage
   (ii)Flashing voltage
   (iii)50% flashing voltage
2. Explain the impulse testing procedure for insulators
3. Explain the need for high voltage testing of (i)Electrical apparatus (ii)Mention the different types of nature of test conductors.
   (iii) Discuss the arrangement with detailed procedure for conducting wrt withstand test and state specification for water used in such tests.
4. (i) Explain the synthetic testing of circuit breakers.
5. (ii)Explain with schematic diagram any one method of measuring RIV of transmission line
6. What are the tests done on cables? How samples (i) are prepared? Explain any two tests (ii)Explain long duration impulse current test and operating duty cycle test on surge diverters

7. Give detailed procedure for impulse voltage withstand test on a 500KVA, 11KV/415V delta/star distribution transformer. Explain the need for recording supplementary oscillograms during impulse testing of transformers.
What are the different power frequency tests on bushings? Mention the procedure for testing? Discuss the various tests carried out in a CB at HV labs.

GLOSSARY

1. Routine test

They are intended to ensure the reliability of an individual test object and to check the quality of an individual test piece.

2. Withstand Test Voltage

The voltage which has to be applied to a test object under specified conditions in a withstand test is called withstand voltage.

3. Flashover Voltage

The voltage that causes a flashover at each of its applications under specified conditions when applied to test objects as specified is called flashover voltage.

4. Porosity Test

The insulator is broken and immersed in a 0.5 % alcohol solution under a pressure of 13800 KN/sq.m for 24 hours.

5. Surge Diverter

It is a non-linear resistor in series with a spark gap kept at line terminals in the substations.

6. Creeping Distance

It is the shortest distance on the contour of the external surface of the insulator unit.

7. Treeing

The spreading of spark channels during tracking in the form of branches of a tree is called treeing.

8. Radio Interfaerence

The power apparatus produces unwanted signals in the radio and high frequency ranges.

9. Isolator

It is a disconnect or or a mechanical switching device which provides in the open position

an isolating distance in accordance with special requirements.

10. Circuit Breakers

It is a switch which automatically interrupts the circuit when a critical current or voltage rating is exceeded.

11. Type test

They are intended to prove or check the design features and the quality. They are done on samples when new designs or design changes are introduced