

RF Serial Remote Control Manual
RFM1/RFS1/RFR1 (V: 1.1)

Working environment
Working temperature: 0-40℃.
Humidity: 0-85%.
Special protection is necessary in high-temperature, high-humidity and corrosive environment.
Don’t ask dirt, dust and others to go into the controller.

Models selection
RFM1: complete functions, remote distance is far, working for CNC 3 serial, except CC-S3
RFS1: simple functions, smart appearance, working for CNC 3 serial

Connection
The shielded cable is used for connection of CNC and remote control
Don’t plug in/out when power on

Chapter 1 brief introduction
Basic features
Processor: industrial microprocessor chip
Communication frequency band: 2.4GHz ISM band
Remote distance: RFS1---25m; RFM1---35m
Standby time: 3 months

Working temperature: 0 ~ 40℃
Storage temperature: -40 ~ 60℃

1-1 **dimension**

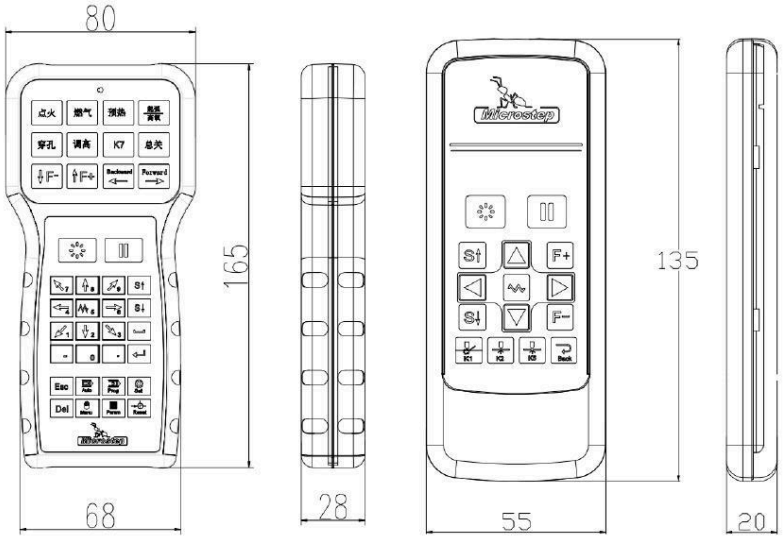

RFM1

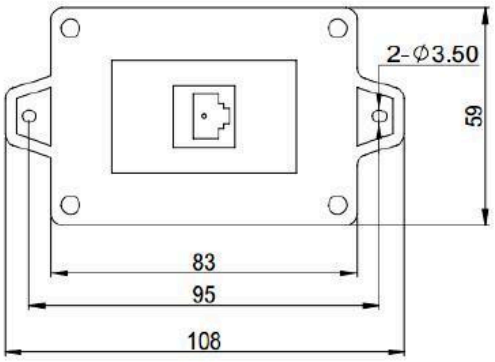

RFS1

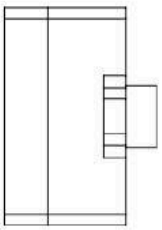

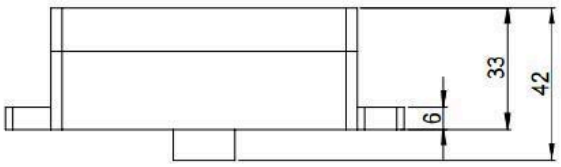

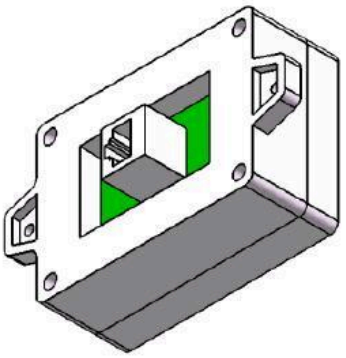

RFR1

1-2 **keys**





点火：Ignition， 燃气：gas， 预热：preheat， 起弧/高氧：arc strike/high oxygen
穿孔：pierce， 调高：THC， 总关：close all
F-: speed up， F+: speed down

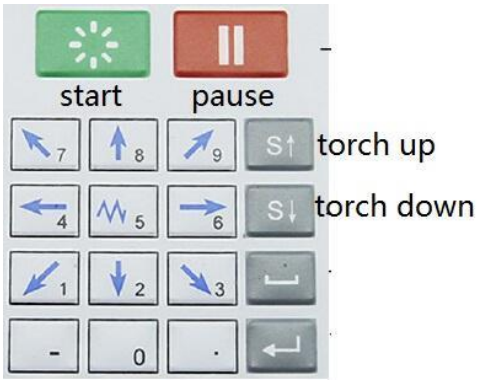



Auto: auto mode， prog: programming， set: set
Manu: manual mode， param: parameters， reset: reset





start	pause

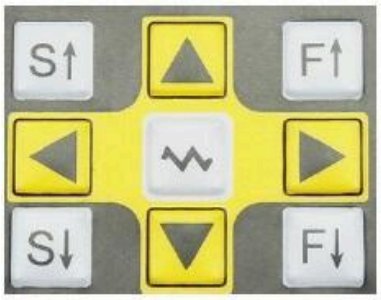

torch up	up	speed up
left	high low speed	right
torch down	down	speed down



gas	arc strike/high oxygen

1-3 **signal port**

RFR1 communication port definition

Internet access	Signal definition	Instruction
1	+24V	24V power +
2	TXD	Serial port signal
3	RXD	Serial port signal
4	NC	Not connect
5	+5V	5V power +
6	NC	Not connect
7	24VG	5V/24V power ground
8	24VG	5V/24V power ground

The cable for connection between CNC and remote control



Chapter 2 user guide

2-1 preparation before operation

1. check whether all parts are ready as below



2. use the cable to connect CNC and the transceiver of the motor control
3. Power on CNC
4. Press the remote control to check whether the LED indicator light is on. If off or weak, please check its battery.

2-2 match code operation

When press keys, if the action is right, then there is no problem. If wrong, it needs to match code.

1. Make sure there is no the same equipment working nearby
2. Transfer and receiver both power on
3. Point-press keys of “pause”, “↓”, “←”, “↑”, “→”, then long time press “pause” about 6s till the indicator light continuously flashes, then match code is done
4. Release “pause” key then start to operate

Troubleshooting

Q1: When press the remote control, LCD is weak or off, and it doesn’t work, how to do?

A1: Check the battery

Q2: Match code is done and LCD is on and the battery is new, if doesn’t work,

how to do?

A2: Check the cable, or power supply from CNC, or whether distance is too far