Les normes de fixation du front panel en fonction des marques

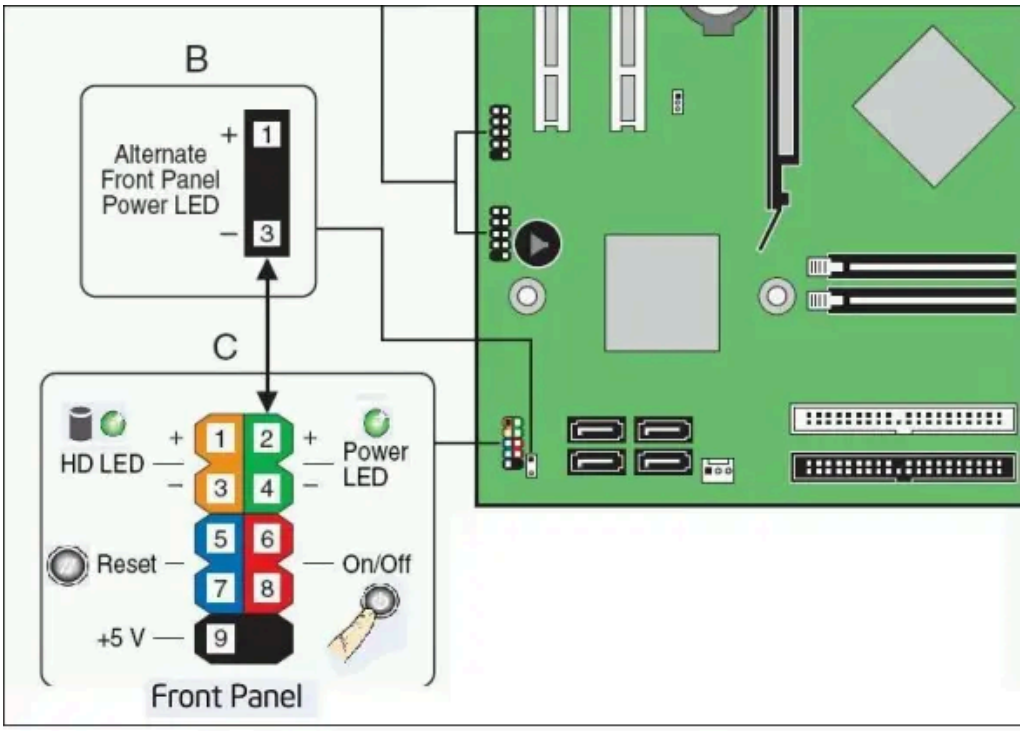



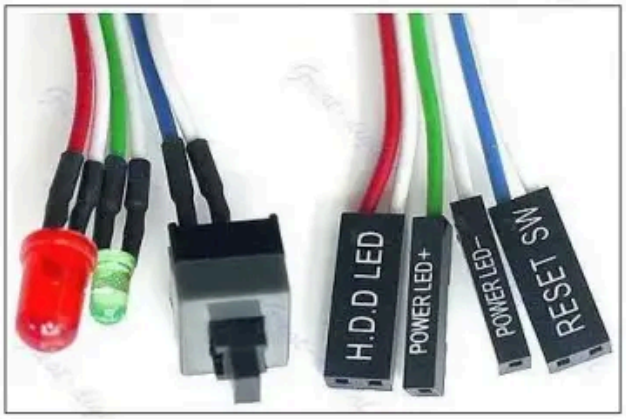

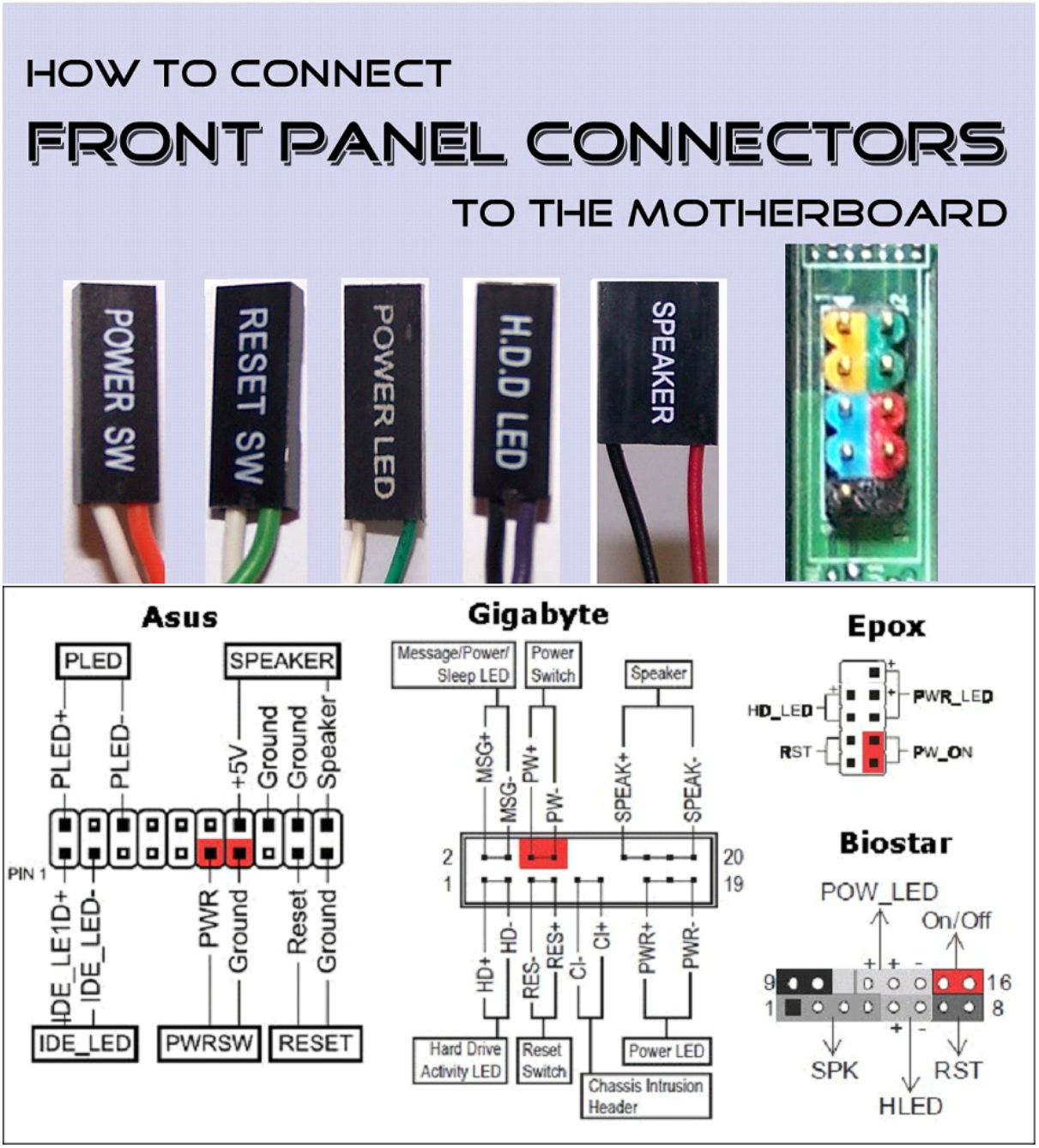
HOW TO CONNECT
FRONT PANEL CONNECTORS
TO THE MOTHERBOARD
POWER SW
RESET SW
POWER LED
H.D.D LED
SPEAKER
Asus
PLED
SPEAKER
PLED+
PLED-
+5V
Ground
Ground
Speaker
PIN 1
IDE_LE1D+
IDE_LED-
PWR
Ground
Reset
Ground
IDE_LED
PWRSW
RESET
Gigabyte
Message/Power/ Sleep LED
Power Switch
Speaker
MSG+
MSG-
PW+
PW-
SPEAK+
SPEAK-
2
1
20
19
HD+
HD-
RES-
RES+
CI-
CI+
PWR+
PWR-
Hard Drive Activity LED
Reset Switch
Power LED
Chassis Intrusion Header
Epox
HD_LED
PWR_LED
RST
PW_ON
Biostar
POW_LED
On/Off
9
1
16
8
SPK
RST
HLED

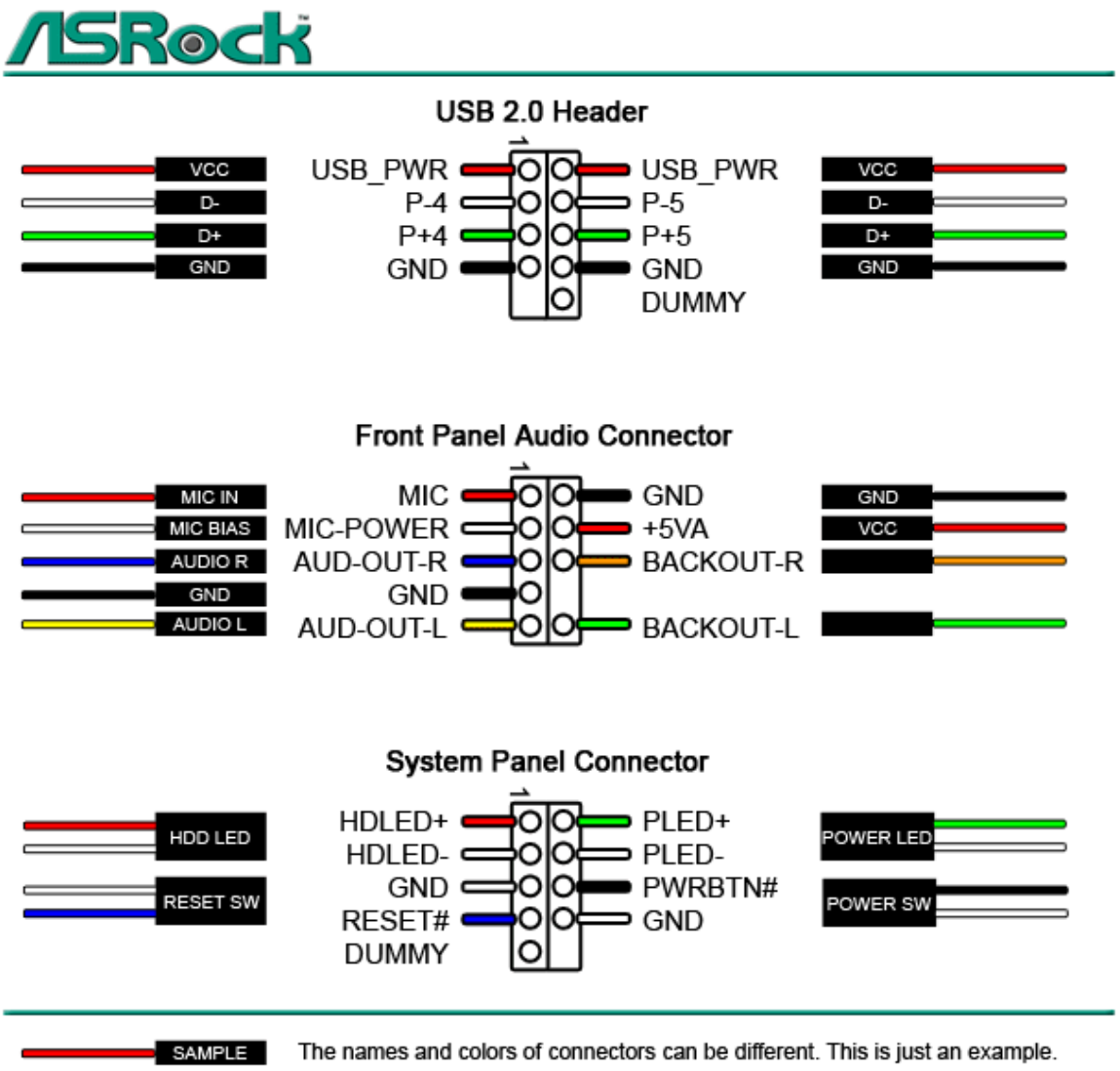
USB 2.0 Header
VCC
D-
D+
GND
USB_PWR
P-4
P+4
GND
USB_PWR
P-5
P+5
GND
DUMMY
VCC
D-
D+
GND
Front Panel Audio Connector
MIC IN
MIC BIAS
AUDIO R
GND
AUDIO L
MIC
MIC-POWER
AUD-OUT-R
GND
AUD-OUT-L
GND
+5VA
BACKOUT-R
BACKOUT-L
GND
VCC
System Panel Connector
HDD LED
RESET SW
HDLED+
HDLED-
GND
RESET#
DUMMY
PLED+
PLED-
PWRBTN#
GND
POWER LED
POWER SW
SAMPLE
The names and colors of connectors can be different. This is just an example.