Physics

Investigatory Project

Year :- 2017-2018

BY :-

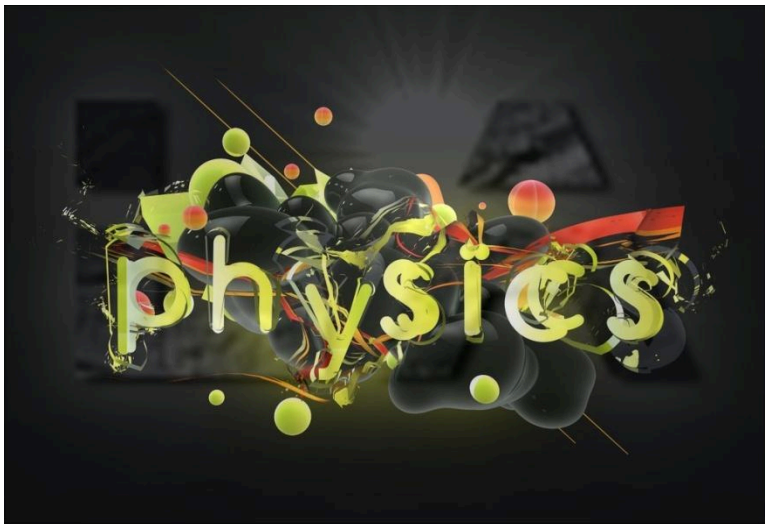



KENDRIYA VIDYALAYA

DEPARTMENT OF PHYSICS

CERTIFICATE

This is to certify that Master _____, a student of class **XII** has successfully completed the research on the below mentioned project under the guidance of _____ (Subject Teacher) during the year 2017-18 in partial fulfilment of Physics Practical Examination conducted by AISSCE, New Delhi.

Signature of Physics Teacher

Signature of External Examiner

Signature of Principal

School Stamp

ACKNOWLEDGEMENT

In the accomplishment of this project successfully, many people have best owned upon me their blessings and the heart pledged support, this time I am utilizing to thank all the people who have been concerned with project.

Primarily I would thank god for being able to complete this project with success. Then I would like to thank my Physics Teacher _____, whose valuable guidance has been the ones that helped me patch this project and make it full proof success his suggestions and his instructions has served as the major contributor towards the completion of the project.

Then I would like to thank my parents and friends who have helped me with their valuable suggestions and guidance has been helpful in various phases of the completion of the project.

Last but not the least I would like to thank my classmates who have helped me a lot.

INDEX

- CERTIFICATE
- ACKNOWLEDGEMENT
- INTRODUCTION
- OBJECTIVE / AIM
- APPARATUS / MATERIAL REQUIRED
- DIAGRAM
- THEORY
- PROCEDURE
- OBSERVATIONS
- CALCULATIONS
- RESULTS
- PRECAUTIONS
- SOURCES OF ERRORS
- BIBLIOGRAPHY

INTRODUCTION

In optics, the refractive index or index of refraction *n* of a material is a dimensionless number that describes how light propagates through that medium. It is defined as

$$n = \frac{c}{v}$$

Where *c* is the speed of light in vacuum and *v* is the phase velocity of light in the medium. For example, the refractive index of water is 1.333; meaning that light travels 1.333 times faster in a vacuum than it does in water.

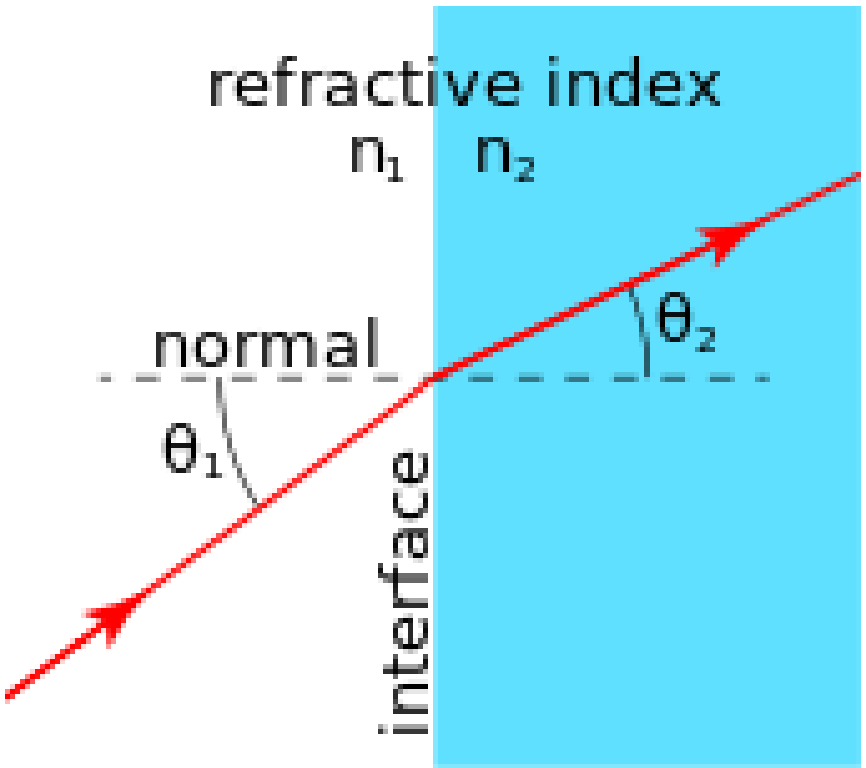

Refraction of a light ray

AIM

To find the refractive indexes of (a) water (b) oil using a plane mirror, an equi-convex lens, and an adjustable object needle.

APPARATUS

- ✔ *Convex Lens*
- ✔ *Plane Mirror*
- ✔ *Water*
- ✔ *Oil*
- ✔ *Clamp Stand*
- ✔ *An Optical Needle*
- ✔ *Plumb Line*
- ✔ *Knitting Needle*
- ✔ *Half Meter Scale*
- ✔ *Glass Slab*
- ✔ *Spherometer*

DIAGRAM

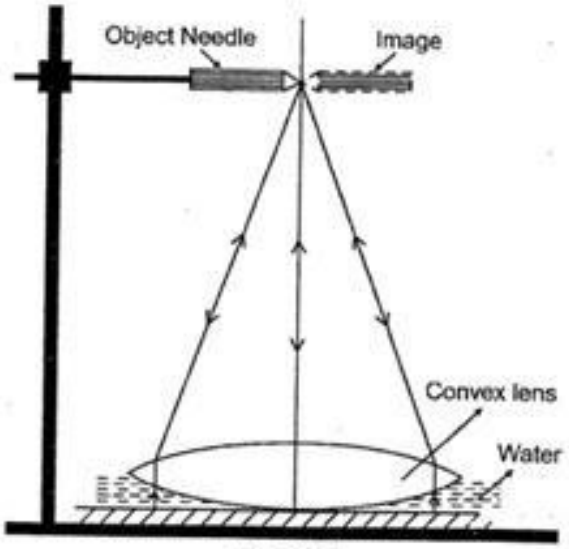

Fig. 3.1

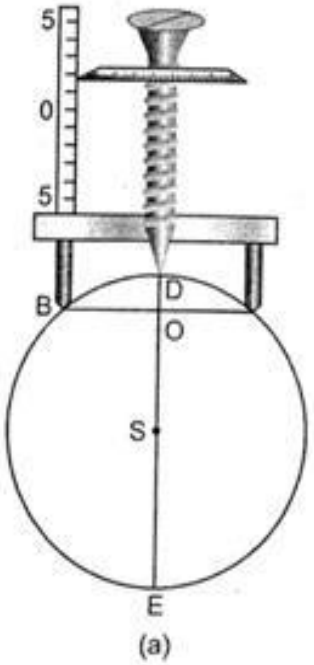

(a)

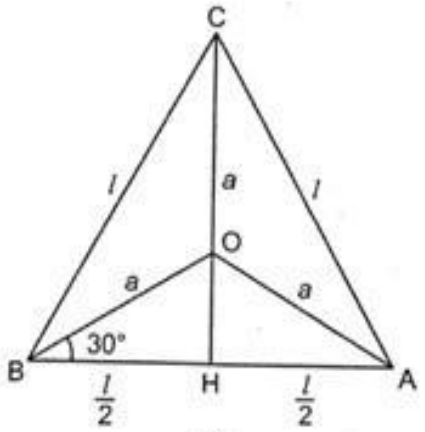

(b)

THEORY

1. If f_1 and f_2 be the focal length of the glass convex lens and liquid lens and f be the focal length of their combination then:-

$$\frac{1}{F}=\frac{1}{f_1}+\frac{1}{f_2} \quad \textbf{or} \quad f_2=\frac{Ff_2}{f_1-F}$$

2. Liquid lens formed a Plano-concave Lens with $R1=R$ and $R2=\infty$ then by using lens make's formula

$$\frac{1}{f_2} = (n - 1)\left[\frac{1}{R_1} - \frac{1}{R_2}\right]$$

$$=(n - 1)\left[\frac{1}{R1} - \frac{1}{\infty}\right]$$

$$= \boldsymbol{(n\text{-}1)}\left[\frac{1}{R} - 0\right]$$

$$= \frac{n-1}{R}$$

$$\boldsymbol{n} = \frac{R}{f_2} + 1$$

Where $\boldsymbol{n}$ = Refractive index of the liquid

$\boldsymbol{R}$ = the radius of the curvature of the convex lens.

3. The radius of the lower surface of the convex lens is given by:

$$\boldsymbol{R} = \frac{l^2}{6h} + \frac{h}{2}$$

Here, $\boldsymbol{l}$ is the average distance between the legs of the spherometer and $\boldsymbol{h}$ is the difference in the reading of the

spherometer when placed first on the convex lens and then on plane mirror.

PROCEDURE

(a) For focal length of convex lens:

1. Find the rough focal length of the convex lens.

2. Place a plane mirror on the horizontal base of the iron stand and then a convex lens on the plane mirror.

3. Hold the needle in the clamp stand and adjust its position on the stand such that there is no parallax between tip of the needle and its image.

4. Measure distance between tip and upper surface of the lens by using a plumb line and half meter scale. Also measure the distance between tip of needle and upper surface of the mirror. Take the mean of the two readings. This means distance will be equal to the focal length of the convex lens (f_1).

(b) For focal length of the combination.

5. Put a few drops of the water on the plane mirror and put the convex lens over it with its same face above as before. The water spreads in a form of layer and acts like a Plano-concave lens.

6. Repeat the steps 3 and 4 to determine the equivalent focal length of the combination.

7. Record the observation.

8. Repeat the steps 5, 6, 7 for other transparent liquid (oil).

(c) For radius of curvature of convex lens surface:

9. Determine the pitch and the least count of the spherometer.

10. Remove the convex lens and dry it completely. Put the spherometer on this lens surface.

11. All the three legs of the spherometer should be placed symmetrically on the lens and adjust the central screw tip to touch the surface of the lens.

12. Remove the spherometer from the surface of the lens and place on the plane mirror surface and record the reading.

13. Repeat the steps 10 and 11 three times.

14. Obtain the impressions of the three legs of the spherometer on a paper and mark them and their average distance.

$$l = \frac{l_1 + l_2 + l_3}{3}$$

OBSERVATIONS

Pitch of the spherometer= 1 cm

Least count of the spherometer = 0.01 cm

Distance between the legs:

(1) AB = 3 cm
(2) BC = 3 cm
(3) CA = 3 cm

Table for calculation of 'h'

S.No	*Initial reading of the C.S. on the convex lens (a)*	*No. of complete rotations (n)*	*Final reading of the c.s on the glass slab*	*Additional C.S div. moved*	*h=n x pitch + m x L.C*	*Mean "h" (cm)*
1	*62*	*0*	*6.5*	*55.5*	*0.555*	*0.5775*
2	*64*	*0*	*4*	*60*	*0.6*	

To measure focal length 'f' of convex lens

		Distance of needle tip from			
Area between lens and plane mirror	*S.No*	*Tip of the upper surface of the convex lens(cm) X_1*	*Upper surface of the plane mirror(cm) X_2*	*Mean $x=\frac{x_1+x_2}{2}$*	*Focal Length (cm)*
Without liquid	*1*	*30.5*	*31*	*30.75*	*f_1= 33.85*
	2	*36.7*	*37.2*	*36.95*	
With water	*1*	*31.4*	*31.8*	*31.6*	*f_2=34.7*
	2	*37.5*	*38.1*	*37.8*	
With oil	*1*	*9.4*	*9.6*	*9.5*	*f_3=10*
	2	*10.4*	*10.6*	*10.5*	

CALCULATIONS

Mean distance between two legs

$$l = \frac{AB+BC+CA}{3} = 3\ cm$$

Mean of h $= \frac{(0.555+0.6)}{2} = 0.5775\ cm$

To find the radius of curvature of the convex lens:

$$R = \frac{l^2}{6h} + \frac{h}{2} = 2.8861\ cm$$

Measurement of refractive indices of water and oil

1) *With water between the convex lens and the plane mirror:*

$$\mu_1 = 1 + \frac{R}{f_2} = 1 + \frac{2.8861}{34.7} = 1.0831$$

2) *With oil between the convex lens and the plane Mirror*

$$\mu_2 = 1 + \frac{R}{f_3} = 1 + \frac{2.8861}{10} = 1.2886$$

Results

The refractive index of water is μ_1 = 1.0831

The refractive index of oil is μ_2 = 1.2886

PRECAUTIONS

1. *The plane mirror should be clean and fully shining surface.*
2. *The liquid taken should be transparent.*
3. *The parallax should be removed tip to tip.*
4. *The eye should be at a distance about 30 cm from the needle while removing the parallax.*
5. *Only few drops of liquid should be taken so that its layer should be thick.*

6. *The legs of the spherometer should be vertical.*
7. *The centre leg of the spherometer should turn in one direction only.*

SOURCES OF ERROR

1. *Liquid may not be quite transparent.*
2. *The parallax may not be fully removed.*
3. *The spherometer legs should be placed symmetrical on the surface of the convex lens.*
4. *The tip of the central screw should not just touch the surface of lens or mirror.*

BIBLIOGRAPHY

- HELP FROM INTERNET
- HELP FROM TEACHERS
- NCERT TEXTBOOK
- NCERT Physics Lab Manual
- www.google.com
- www.scribd.com

- www.wikipedia.com