# The Morley Academy

# 3.Quantititve Chemistry Mastery Booklet

(Chemistry Paper 1)

Name : _____

Teacher : _____

Date Given : _____

These booklets are a consolidation of your learning. They should be used in the following way - You should attempt the questions WITHOUT looking at the answers. Then mark your questions with **green pen** and add any missing marks you missed.

*THESE BOOKLETS WILL IMPROVE YOUR GRADES...!!*

**Q1.** This question is about carbon and gases in the air.

(a) Carbon atoms have protons, neutrons and electrons.

Complete the table by writing the relative mass of a neutron and an electron.

| Name of particle | Relative mass |
|---|---|
| proton | 1 |
| neutron | |
| electron | |

**(2)**

(b) What is the total number of protons and neutrons in an atom called?

Tick ( ✓ ) **one** box.

The atomic number ☐

The mass number ☐

One mole of the atom ☐

**(1)**

(c) An atom of carbon has six electrons.

Which structure, **A, B** or **C**, represents the electronic structure of the carbon atom?

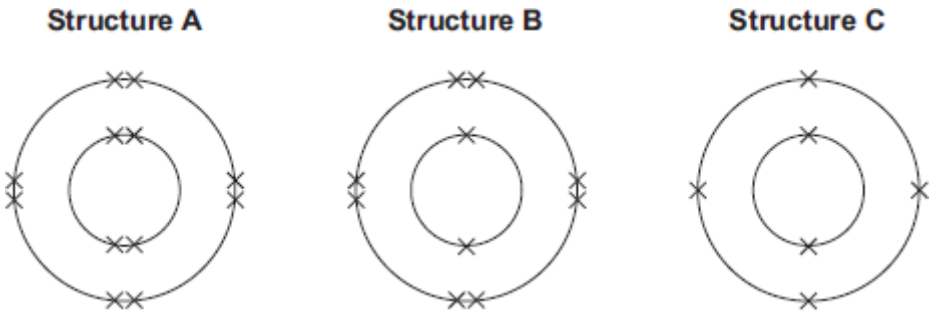


The carbon atom is structure ☐

**(1)**

(d) Carbon reacts with oxygen to produce carbon dioxide ($CO_2$).

(i) How many different elements are in one molecule of carbon dioxide?

_____

**(1)**

(ii) What is the total number of atoms in one molecule of carbon dioxide?

_____

**(1)**

(e) Sometimes carbon reacts with oxygen to produce carbon monoxide (CO).

(i) Calculate the relative formula mass ($M_r$) of carbon monoxide.

Relative atomic masses ($A_r$): C = 12; O = 16

_____

_____

$M_r$ of carbon monoxide = _____

**(1)**

(ii) Calculate the percentage by mass of carbon in carbon monoxide.

_____

_____

Percentage by mass of carbon in carbon monoxide = _____%

**(1)**

(f) Carbon dioxide is one of the gases in the air.

(i) The graph shows the percentage of argon and the percentage of carbon dioxide in the air.

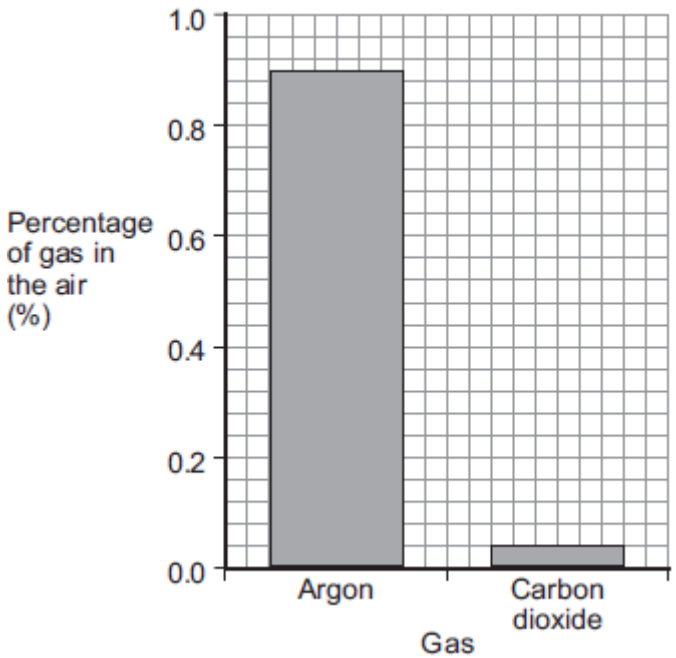

What is the percentage of argon in the air?

Percentage of argon = _____ %

**(1)**

(ii) An instrumental method is used to measure the amount of carbon dioxide in the air.

Give **one** reason for using an instrumental method.

_____

_____

**(1)**

**(Total 10 marks)**

**Q2.** Citric acid is a weak acid.

(a) Explain what is meant by a weak acid.

_____

_____

_____

_____

**(2)**

A student titrated citric acid with sodium hydroxide solution.

This is the method used.

1. Pipette 25.0 $cm^3$ of sodium hydroxide solution into a conical flask.
2. Add a few drops of thymol blue indicator to the sodium hydroxide solution.
   Thymol blue is blue in alkali and yellow in acid.
3. Add citric acid solution from a burette until the end-point was reached.

(b) Explain what would happen at the end-point of this titration.

Refer to the acid, the alkali and the indicator in your answer.

_____

_____

_____

_____

_____

_____

**(3)**

(c) Explain why a pipette is used to measure the sodium hydroxide solution but a burette is used to measure the citric acid solution

_____

_____

_____

_____

**(2)**

(d) The table shows the student's results.

| | **Titration 1** | **Titration 2** | **Titration 3** | **Titration 4** | **Titration 5** |
|---|---|---|---|---|---|
| Volume of citric acid solution in $cm^3$ | 13.50 | 12.10 | 11.10 | 12.15 | 12.15 |

The equation for the reaction is:

$$C_6H_8O_7 + 3\ NaOH \longrightarrow C_6H_5O_7Na_3 + 3\ H_2O$$

The concentration of the sodium hydroxide was 0.102 mol / $dm^3$

Concordant results are those within 0.10 $cm^3$ of each other.

Calculate the concentration of the citric acid in mol / $dm^3$
Use only the concordant results from the table in your calculation.
You must show your working.

_____

_____

_____

_____

Concentration = _____ mol / $dm^3$

**(5)**

**(Total 12 marks)**

**Q3.** A student investigated the reactions of copper carbonate and copper oxide with dilute hydrochloric acid.

In both reactions one of the products is copper chloride.

(a) Describe how a sample of copper chloride crystals could be made from copper carbonate and dilute hydrochloric acid.

_____

_____

_____

_____

_____

_____

_____

_____

**(4)**

(b) A student wanted to make 11.0 g of copper chloride.

The equation for the reaction is:

$$CuCO_3 + 2HCl \rightarrow CuCl_2 + H_2O + CO_2$$

Relative atomic masses, $A_r$: H = 1; C = 12; O = 16; Cl = 35.5; Cu = 63.5

Calculate the mass of copper carbonate the student should react with dilute hydrochloric acid to make 11.0 g of copper chloride.

_____

_____

_____

_____

Mass of copper carbonate = _____ g

**(4)**

(c) The percentage yield of copper chloride was 79.1 %.

Calculate the mass of copper chloride the student actually produced.

_____

_____

Actual mass of copper chloride produced = _____ g

**(2)**

(d) Look at the equations for the two reactions:

Reaction 1 $CuCO_3(s) + 2HCl(aq) \rightarrow CuCl_2(aq) + H_2O(l) + CO_2(g)$

Reaction 2 $CuO(s) + 2HCl(aq) \rightarrow CuCl_2(aq) + H_2O(l)$

Reactive formula masses: CuO = 79.5; HCl = 36.5; $CuCl_2$ = 134.5; $H_2O$ = 18

The percentage atom economy for a reaction is calculated using:

$$\frac{\text{Relative formula mass of desired product from equation}}{\text{Sum of relative formula masses of all reactants from equation}} \times 100$$

Calculate the percentage atom economy for Reaction 2.

_____

_____

_____

_____

Percentage atom economy = _____ %

**(3)**

(e) The atom economy for Reaction 1 is 68.45 %.
Compare the atom economies of the two reactions for making copper chloride.

Give a reason for the difference.

_____

_____

**(1)**

**(Total 14 marks)**

**Q4.** Cobalt forms coloured compounds.

A pink cobalt compound reacts with hydrochloric acid.

The reaction can be represented as:

pink cobalt compound + hydrochloric acid $\rightleftharpoons$ blue cobalt compound + water

The forward reaction is endothermic.

When both cobalt compounds are present in a solution at equilibrium, the equilibrium mixture is purple.

(a) What is meant by equilibrium?

_____

_____

**(2)**

(b) The equilibrium mixture is cooled.

Explain what happens to the concentration of the pink cobalt compound.

_____

_____

_____

_____

**(3)**

(c) More hydrochloric acid is added.

Explain what happens to the colour of the equilibrium mixture

_____

_____

_____

_____

**(3)**

(d) Why does cobalt form different coloured compounds?

_____

**(1)**

(e) An oxide of cobalt has the formula $Co_2O_3$

Which cobalt ion is present in this oxide?

Tick (✔) **one** box.

$Co^{+}$ ☐

$Co^{2+}$ ☐

$Co^{3+}$ ☐

$Co^{4+}$ ☐

**(1)**

(f) Cobalt compounds can act as catalysts.

Which two statements about cobalt compounds are correct?

Tick (✔) **two** boxes.

They allow reactions to reach equilibrium more quickly. ☐

They are reactants in reactions catalysed by cobalt compounds. ☐

They are used up when acting as catalysts. ☐

They increase the equilibrium yield of reactions. ☐

They provide a different reaction pathway. ☐

**(2)**

(g) The reaction of hydrogen with carbon monoxide is catalysed by cobalt metal.

Balance the equation for the reaction.

$$H_2 \quad + \quad CO \quad \longrightarrow \quad C_6H_{14} \quad + \quad H_2O$$

**(1)**

(h) $C_6H_{14}$ is an alkane.

What is the formula of an alkane containing 18 hydrogen atoms?

_____

**(1)**

(i) The graph shows a reaction profile diagram for a reaction **without** a catalyst.

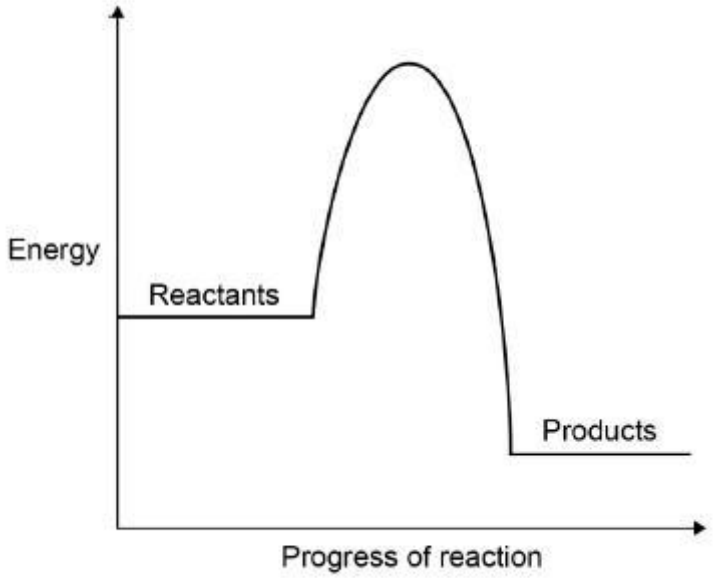


On the graph:

- draw the reaction profile diagram for a catalysed reaction
- draw and label an arrow to show the activation energy for the reaction **without** a catalyst.

**(2)**

**(Total 16 marks)**

**Q5.** Some students were investigating the rate at which carbon dioxide gas is produced when metal carbonates react with an acid.

One student reacted 1.00 g of calcium carbonate with 50 $cm^3$, an excess, of dilute hydrochloric acid.

The apparatus used is shown in **Diagram 1**.

**Diagram 1**

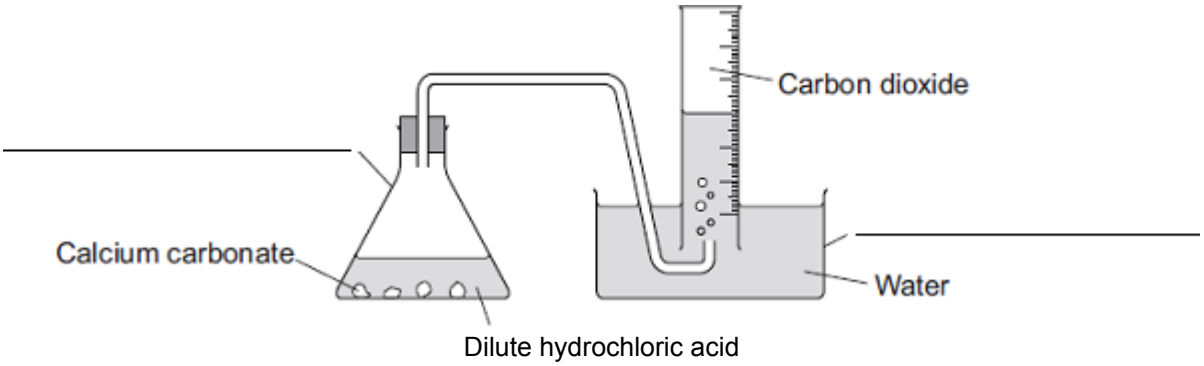


(a) Complete the **two** labels for the apparatus on the diagram.

**(2)**

(b) The student measured the volume of gas collected every 30 seconds.

The table shows the student's results.

| Time in seconds | Volume of carbon dioxide collected in $cm^3$ |
|---|---|
| 30 | 104 |
| 60 | |
| 90 | 198 |
| 120 | 221 |
| 150 | 232 |
| 180 | 238 |
| 210 | 240 |
| 240 | 240 |

(i) **Diagram 2** shows what the student saw at 60 seconds.

**Diagram 2**

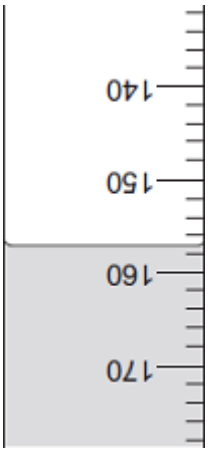


What is the volume of gas collected?

Volume of gas = _____ $cm^3$

**(1)**

(ii) Why did the volume of gas stop changing after 210 seconds?

_____

_____

**(1)**

(c) Another student placed a conical flask containing 1.00 g of a Group 1 carbonate ($M_2CO_3$) on a balance.

He then added 50 $cm^3$, an excess, of dilute hydrochloric acid to the flask and measured the mass of carbon dioxide given off.

The equation for the reaction is:

$$M_2CO_3 + 2HCl \longrightarrow 2MCl + H_2O + CO_2$$

The final mass of carbon dioxide given off was 0.32 g.

(i) Calculate the amount, in moles, of carbon dioxide in 0.32 g carbon dioxide.

Relative atomic masses ($A_r$): C = 12; O = 16

_____

_____

_____

Moles of carbon dioxide = _____ moles

**(2)**

(ii) How many moles of the metal carbonate are needed to make this number of moles of carbon dioxide?

_____

_____

Moles of metal carbonate = _____ moles

**(1)**

(iii) The mass of metal carbonate used was 1.00 g.

Use this information, and your answer to part **(c) (ii)**, to calculate the relative formula mass ($M_r$) of the metal carbonate.

If you could not answer part **(c) (ii)**, use 0.00943 as the number of moles of metal carbonate. This is **not** the answer to part **(c) (ii)**.

_____

_____

Relative formula mass ($M_r$) of metal carbonate = _____

**(1)**

(iv) Use your answer to part **(c) (iii)** to calculate the relative atomic mass ($A_r$) of the metal in the metal carbonate ($M_2CO_3$) and so identify the Group 1 metal in the metal carbonate.

If you could not answer part **(c) (iii)**, use 230 as the relative formula mass of the metal carbonate. This is **not** the answer to part **(c) (iii)**.

To gain full marks, you must show your working.

_____

_____

_____

_____

Relative atomic mass of metal is _____

Identity of metal _____

**(3)**

(d) Two other students repeated the experiment in part **(c)**.

(i) When the first student did the experiment some acid sprayed out of the flask as the metal carbonate reacted.

Explain the effect this mistake would have on the calculated relative atomic mass of the metal.

_____

_____

_____

_____

_____

**(3)**

(ii) The second student used 100 $cm^3$ of dilute hydrochloric acid instead of 50 $cm^3$.

Explain the effect, if any, this mistake would have on the calculated relative atomic mass of the metal.

_____

_____

_____

_____

_____

**(3)**

**(Total 17 marks)**

**Q6.** A student used the equipment shown to do a titration.

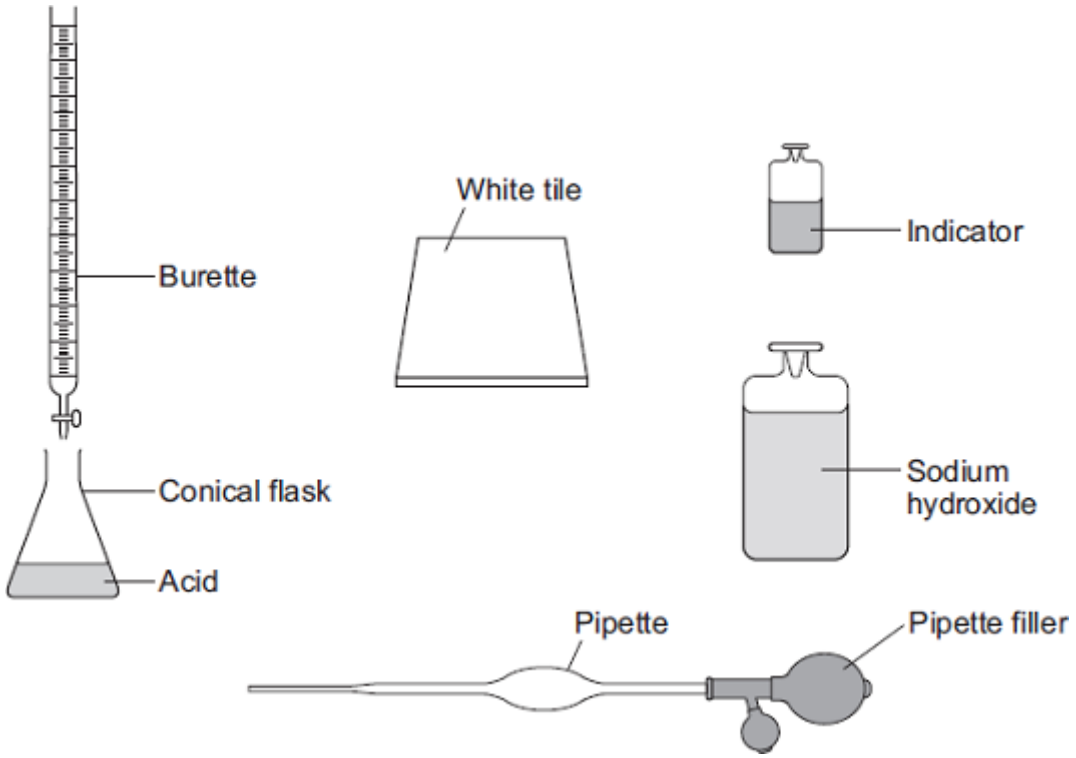


Describe how the student should use this equipment to find the volume of sodium hydroxide solution that reacts with a known volume of acid.
Include any measurements the student should make.

Do **not** describe how to do any calculations.

**(Total 6 marks)**

**Q7.** Magnesium reacts with steam to produce hydrogen gas and magnesium oxide.

A teacher demonstrated the reaction to a class. The figure below shows the apparatus the teacher used.

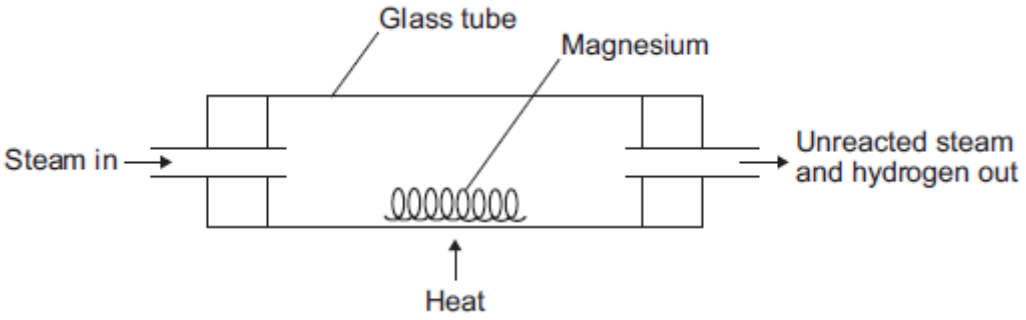


(a) (i) The hydrogen produced was collected.

Describe how to test the gas to show that it is hydrogen.

Test _____

_____

Result _____

_____

**(2)**

(ii) Explain why the magnesium has to be heated to start the reaction.

_____

_____

_____

_____

**(2)**

(b) The equation for the reaction is:

$$Mg(s) + H_2O(g) \longrightarrow MgO(s) + H_2(g)$$

(i) The teacher used 1.00 g of magnesium.

Use the equation to calculate the maximum mass of magnesium oxide produced.

Give your answer to three significant figures.

Relative atomic masses ($A_r$): O = 16; Mg = 24

_____

_____

_____

Maximum mass = _____ g

**(3)**

(ii) The teacher's demonstration produced 1.50 g of magnesium oxide.

Use your answer from part (b)(i) to calculate the percentage yield.

If you could not answer part (b)(i), use 1.82 g as the maximum mass of magnesium oxide. This is **not** the answer to part (b)(i).

_____

Percentage yield = _____ %

**(2)**

(iii) Give **one** reason why the percentage yield is less than 100%.

_____

_____

_____

**(1)**

**(Total 10 marks)**

**Q8.** The Haber Process is used to produce ammonia from nitrogen and hydrogen.

The equation for the reaction is:

$$N_2 + 3H_2 \rightleftharpoons 2NH_3$$

(a) An ammonia molecule has the formula $NH_3$

How many atoms are there in one molecule of ammonia?

Tick (✔) **one** box.

2 ☐ 3 ☐ 4 ☐ 6 ☐

**(1)**

(b) What does the symbol ⇌ mean?

_____

**(1)**

(c) Draw **one** line from each gas to the source of that gas.

| Gas | Source |
|---|---|
| | Air |
| Hydrogen | Alcohol |
| | Ammonia |
| Nitrogen | Iron |
| | Natural gas |

**(2)**

The diagram shows the Haber process.

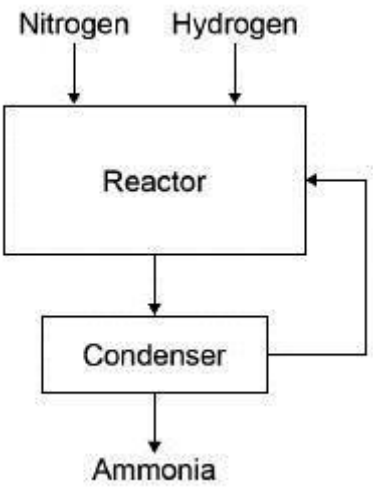


A mixture of ammonia, hydrogen and nitrogen gases leave the reactor.

**Table 1** shows the boiling points of the gases.

**Table 1**

| Gas | Boiling point in °C |
|---|---|
| Ammonia | – 33 |
| Nitrogen | – 196 |
| Hydrogen | – 253 |

(d) The mixture is cooled to a temperature at which **only** the ammonia condenses to a liquid.

Which temperature could be used?

Tick (✔) **one** box.

− 20 °C ☐

− 40 °C ☐

− 200 °C ☐

− 260 °C ☐

**(1)**

(e) What happens to the unreacted nitrogen?

Tick (✔) **one** box.

Collected and sold ☐

Recycled to the reactor ☐

Released into the air ☐

Used as a catalyst ☐

**(1)**

Ammonia from the Haber process can be used to produce fertilisers.

**Table 2** gives information about two compounds used in fertilisers.

| Fertiliser | Compound | Cost in £ / kg |
|---|---|---|
| A | Potassium chloride | 0.24 |
| B | Diammonium phosphate | 0.35 |

(f) What type of bonding is present in potassium chloride?

Tick (✔) **one** box.

Covalent ☐

Ionic ☐

Metallic ☐

**(1)**

(g) Diammonium phosphate has the chemical formula $(NH_4)_2HPO_4$

Which **two** elements in $(NH_4)_2HPO_4$ improve agricultural productivity?

Tick (✔) **two** boxes.

Chlorine ☐

Hydrogen ☐

Nitrogen ☐

Oxygen ☐

Phosphorus ☐

A farmer uses fertilisers **A** and **B** on a field with an area of 0.05 $km^2$

**(2)**

(h) 50 kg of fertiliser A will cover an area of 0.01 $km^2$

Calculate the cost of fertilising a field with an area of 0.05 $km^2$ with fertiliser **A**.

Use **Table 2**.

_____

_____

Cost = £ _____

**(2)**

(i) Fertiliser **B** is more expensive than fertiliser **A**.

Suggest why the farmer uses **both** fertilisers.

_____

_____

**(1)**

**(Total 12 marks)**

**Q9.** Sodium hydroxide neutralises sulfuric acid.

The equation for the reaction is:

$$2NaOH + H_2SO_4 \rightarrow Na_2SO_4 + 2H_2O$$

(a) Sulfuric acid is a strong acid.

What is meant by a strong acid?

_____

_____

_____

**(2)**

(b) Write the ionic equation for this neutralisation reaction. Include state symbols.

_____

**(2)**

(c) A student used a pipette to add 25.0 $cm^3$ of sodium hydroxide of unknown concentration to a conical flask.

The student carried out a titration to find out the volume of 0.100 mol / $dm^3$ sulfuric acid needed to neutralise the sodium hydroxide.

Describe how the student would complete the titration.

You should name a suitable indicator and give the colour change that would be seen.

_____

_____

_____

_____

_____

_____

_____

**(4)**

(d) The student carried out five titrations. Her results are shown in the table below.

| | Titration 1 | Titration 2 | Titration 3 | Titration 4 | Titration 5 |
|---|---|---|---|---|---|
| Volume of 0.100 mol / $dm^3$ sulfuric acid in $cm^3$ | 27.40 | 28.15 | 27.05 | 27.15 | 27.15 |

Concordant results are within 0.10 $cm^3$ of each other.

Use the student's concordant results to work out the mean volume of 0.100 mol / $dm^3$ sulfuric acid added.

_____

Mean volume = _____ $cm^3$

**(2)**

(e) The equation for the reaction is:

$$2NaOH + H_2SO_4 \rightarrow Na_2SO_4 + 2H_2O$$

Calculate the concentration of the sodium hydroxide.

Give your answer to three significant figures.

_____

_____

_____

_____

Concentration = _____ mol / $dm^3$

**(4)**

(f) The student did another experiment using 20 $cm^3$ of sodium hydroxide solution with a concentration of 0.18 mol / $dm^3$.

Relative formula mass ($M_r$) of NaOH = 40

Calculate the mass of sodium hydroxide in 20 $cm^3$ of this solution.

_____

_____

_____

_____

Mass = _____ g

**(2)**

**(Total 16 marks)**

**Q10.** Nitrogen and hydrogen react to produce ammonia in the Haber process.

**Figure 1** shows the Haber process.

**Figure 1**

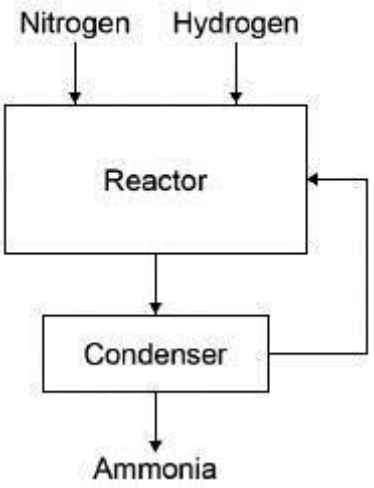


A gaseous mixture of ammonia, hydrogen and nitrogen leaves the reactor.

**Table 1** shows the boiling points of the gases.

**Table 1**

| **Gas** | **Boiling point in °C** |
|---|---|
| Ammonia | −33 |
| Nitrogen | −196 |
| Hydrogen | −253 |

(a) Suggest how ammonia is separated from the other gases.

_____

_____

_____

**(2)**

(b) What happens to the unreacted hydrogen and nitrogen?

_____

_____

**(1)**

The equation for the reaction is:

$$N_2(g) + 3H_2(g) \rightleftharpoons 2NH_3(g)$$

The forward reaction is exothermic.

(c) Calculate the volume of ammonia produced from the complete reaction of 825 $dm^3$ of hydrogen.

_____

_____

Volume of ammonia = _____ $dm^3$

**(2)**

(d) The Haber process uses a temperature of 450 °C and a pressure of 200 atmospheres.

Why are these conditions used?

Tick **two** boxes.

- [ ] A higher pressure is maintained using less energy
- [ ] A higher temperature would increase the equilibrium yield
- [ ] A lower pressure would decrease the equilibrium yield
- [ ] A lower temperature would make the reaction too slow
- [ ] There are more product molecules than reactant molecules

**(2)**

Most of the ammonia produced is used to make fertilisers.

**Table 2** shows information about compounds used as fertilisers.

**Table 2**

| **Compound** | **Formula** | **Cost in £ / tonne** |
|---|---|---|
| **A** | $NH_4NO_3$ | 220 |
| **B** | $(NH_4)_2HPO_4$ | 350 |
| **C** | KCl | 235 |

(e) Which element in compound A improves agricultural productivity?

_____

**(1)**

(f) Which **two** compounds can be mixed to make a fertiliser containing three elements that improve agricultural productivity?

Give a reason why you have chosen these compounds.

Compounds _____ and _____

Reason _____

_____

**(2)**

(g) **Figure 2** shows a flow chart for the production of compounds B and C.

**Figure 2**

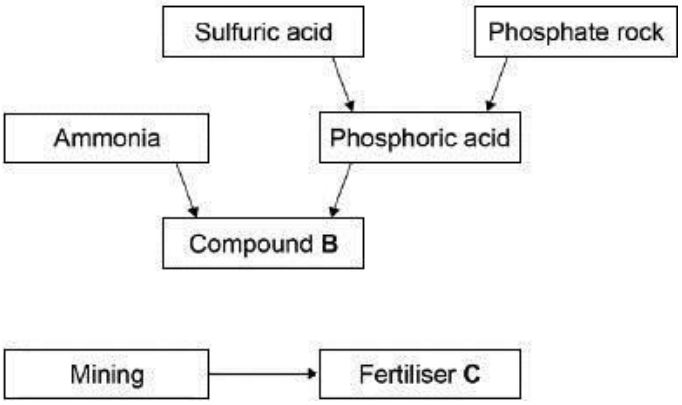


Suggest **two** possible reasons for the difference in cost between compounds **B** and **C**.

1. _____

_____

2. _____

_____

**(2)**

**(Total 12 marks)**

Mark schemes

## Q1.

(a) 1

*must be in this order*

1

very small

*accept negligible, 1 / 2000*
*allow zero*

1

(b) The mass number

1

(c) C

1

(d) (i) 2

1

(ii) 3

1

(e) (i) 28

1

(ii) 42.9

*accept ecf from (e)(i)*
*accept 42 - 43*

1

(f) (i) 0.9

1

(ii) any **one** from:

- accurate
- sensitive
- rapid
- small sample.

1

**[10]**

## Q2.

(a) produces $H^+$ / hydrogen ions in aqueous solution

1

(but is) only partially / slightly ionised

1

(b) indicator changes colour

1

from blue to yellow

*allow from blue to green*

1

(when) the acid and alkali are (exactly) neutralised
**or**
(when) no excess of either acid or alkali

1

(c) pipette measures one fixed volume (accurately)

1

(but) burette measures variable volumes (accurately)

1

(d) $\frac{12.10 + 12.15 + 12.15}{3}$

1

(mean titre =) 12.13(3) ($cm^3$)

1

(moles NaOH = conc × vol) = 0.00255

1

(moles citric acid = $\frac{1}{3}$ moles NaOH) = 0.00085

1

(conc acid = moles / vol) = 0.0701 (mol / $dm^3$)

*allow ecf from steps 1, 2, 3 and / or 4*

*allow an answer of 0.0701 (mol / $dm^3$) without working for **1** mark only*

1

**[12]**

## Q3.

(a) add excess copper carbonate (to dilute hydrochloric acid)

*accept alternatives to excess, such as 'until no more reacts'*

1

filter (to remove excess copper carbonate)

*reject heat until dry*

1

heat filtrate to evaporate some water **or** heat to point of crystallisation

*accept leave to evaporate or leave in evaporating basin*

1

leave to cool (so crystals form)

*until crystals form*

1

*must be in correct order to gain **4** marks*

(b) $M_r$ $CuCl_2$ = 134.5

*correct answer scores **4** marks*

1

moles copper chloride = (mass / $M_r$ = 11 / 134.5) = 0.0817843866

1

$M_r$ $CuCO_3$= 123.5

1

Mass $CuCO_3$ (=moles × $M_2$= 0.08178 × 123.5) = 10.1(00)

1

*accept 10.1 with no working shown for **4** marks*

(c) $\frac{79.1}{100} \times 11.0$

**or**

11.0 × 0.791

1

8.70 (g)

1

*accept 8.70(g) with no working shown for **2** marks*

(d) Total mass of reactants = 152.5

1

$\frac{134.5}{152.5}$

*allow ecf from step 1*

1

88.20 (%)

1

*allow 88.20 with no working shown for **3** marks*

(e) atom economy using carbonate lower because an additional product is made **or** carbon dioxide is made as well

*allow ecf*

1

**[14]**

## Q4.

(a) in a closed system

1

the rate of the forward and backward reactions are equal

1

(b) concentration increases

1

(because) reaction / equilibrium moves to the left / reactant side

1

(since the) reverse reaction is exothermic

*allow (so that) temperature increases*

1

(c) becomes blue

1

(because) reaction / equilibrium moves to the right / product side

1

(so) concentration of blue cobalt compound increases

*allow (so that) concentration of hydrochloric acid decreases*

1

(d) (cobalt has) ions with different charges

*allow (cobalt is a) transition metal*

1

(e) $Co^{3+}$

1

(f) they allow reactions to reach equilibrium more quickly

1

they provide a different reaction pathway

1

(g) $\mathbf{13}H_2 + \mathbf{6}CO \rightarrow C_6H_{14} + \mathbf{6}H_2O$

*allow multiples*

1

(h) $C_8H_{18}$

1

(i) curve below printed curve

*do **not** accept different reactant or product levels*

1

vertical arrow from reactant level to peak of **printed** curve

1

an answer of:

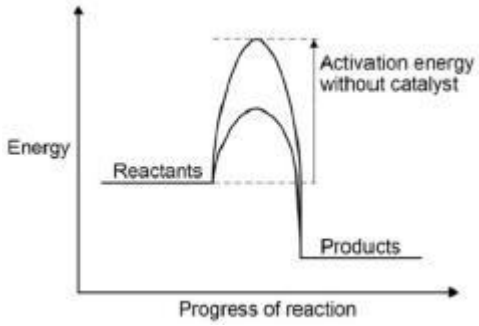


scores **2** marks

**[16]**

## Q5.

(a) left hand: (conical) flask

*do **not** accept round bottomed flask or container which is not a flask*

1

right hand: beaker / trough

*accept plastic box*

1

(b) (i) 157

1

(ii) all calcium carbonate used up **or** reaction stopped

*do **not** accept all acid used up*

1

(c) (i) 0.007(272727…)

*correct answer with or without working gains **2** marks*

*if answer incorrect, allow (0.32 / 44) for **1** mark*

2

(ii) 0.007(272727…)

*allow ecf from **(c)(i)***

1

(iii) ($M_r$ = mass / moles = 1 / 0.00727…) = 137.5 or 138

*allow ecf from **(c)(ii)***

*if use 0.00943 moles then = 106*

*if use 0.007 allow 143 (142.857)*

1

(iv) (138) – 60 (= 78)

*23 / 85*

1

(78 / 2) = 39

1

potassium

*sodium / rubidium*

*identity of metal ecf on $A_r$, but **must** be Group 1*

*If no working max **1** mark*

1

(d) (i) (relative atomic mass) would decrease

1

because the mass lost greater

1

so moles carbon dioxide larger **or** moles metal carbonate greater

1

(ii) no change

1

because the acid (already) in excess

1

so the amount carbon dioxide lost is the same

1

**[17]**

## Q6.

Marks awarded for this answer will be determined by the Quality of Written Communication (QWC) as well as the standard of the scientific response. Examiners should also refer to the information in the Marking guidance.

**0 marks**
No relevant content.

**Level 1 (1-2 marks)**
There is a simple description of using some of the equipment.

**Level 2 (3-4 marks)**
There is a description of an experimental method involving a measurement, **or** including addition of alkali to acid (or vice versa).

**Level 3 (5-6 marks)**
There is a description of a titration that would allow a successful result to be obtained.

**Examples of chemistry points made in the response could include:**

- acid in (conical) flask
- volume of acid measured using pipette
- indicator in (conical) flask
- sodium hydroxide in burette
- white tile under flask
- slow addition
- swirling
- colour change
- volume of sodium hydroxide added

**Extra information**

- allow acid in the burette to be added to sodium hydroxide in the (conical) flask
- allow any specified indicator

colour change need not be specified

**[6]**

## Q7.

(a) (i) lit splint **or** ignite the gas

**1**

(squeaky) pop / explosion

**1**

(ii) because it provides energy (for the reaction)

**1**

to break bonds (in the reactants) **or** so the particles collide successfully

*ignore reference to frequency or rate of collisions*

*because it provides the activation energy gains **2** marks*

**1**

(b) (i) 1.67(g)

*allow 1.66-1.68*

*correct answer (to 3 significant figures) with or without working gains **3** marks*

*if answer incorrect allow up to **2** marks for the following steps:*

*24 → 40*

*1.00 → 40 / 24*

***or***

*moles magnesium = 1 / 24 **or** 0.04(17)*

*multiply by 40*

*allow ecf from incorrect ratio **or** incorrect number of moles*

**3**

(ii) **if correct answer from part (b)(i) used**

*allow ecf from part (b)(i)*

89.8 or 90

**if 1.82 g used**

82.4 or 82

*correct answer with or without working gains **2** marks*

*if answer incorrect, allow the following for **1** mark:*

*1.50 / 1.67 (or their answer from part (b)(i))*

*if 1.82 g used: 1.50 / 1.82*

**2**

(iii) any **one** from:

*ignore measurement errors*

- not all the magnesium reacted

  *allow the reaction may be reversible*
- some of the magnesium oxide / product may have been left in the tube **or** may have been lost

  *ignore magnesium lost*
- different / unexpected reaction
- magnesium not pure

**1**

**[10]**

## Q8.

(a) 4

1

(b) reversible (reaction)

1

(c)

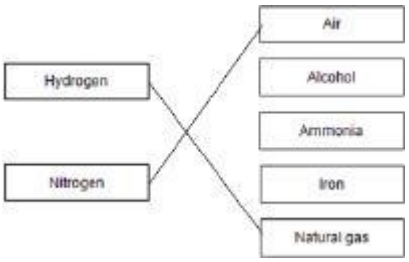


1
1

(d) −40 °C

1

(e) recycled to the reactor

1

(f) ionic

1

(g) nitrogen

1

phosphorus

1

(h) 0.24 × 50 × 5

*allow £87.50*

1

= £60

1

*an answer of £60 scores **2** marks*

(i) may need to use nitrogen, phosphorus and potassium

*allow neither fertiliser has all the elements / nutrients needed.*

**[12]**

## Q9.

(a) (sulfuric acid is) completely / fully ionised

1

In aqueous solution **or** when dissolved in water

1

(b) $H^+(aq) + OH^-(aq) \rightarrow H_2O(l)$

*allow multiples*

***1** mark for equation*

***1** mark for state symbols*

**2**

(c) adds indicator, eg phenolpthalein / methyl orange / litmus added to the sodium hydroxide
(in the conical flask)

*do **not** accept universal indicator*

**1**

(adds the acid from a) burette

**1**

with swirling **or** dropwise towards the end point **or** until the indicator just changes colour

**1**

until the indicator changes from pink to colourless (for phenolphthalein) or yellow to red
(for methyl orange) or blue to red (for litmus)

**1**

(d) titrations 3, 4 and 5
**or**

$$\frac{27.05 + 27.15 + 27.15}{3}$$

**1**

27.12 $cm^3$

*accept 27.12 with no working shown for **2** marks*

**1**

*allow 27.1166 with no working shown for **2** marks*

(e) Moles $H_2SO_4$ = conc × vol = 0.00271

*allow ecf from 8.4*

**1**

Ratio $H_2SO_4$:NaOH is 1:2
**or**
Moles NaOH = Moles $H_2SO_4$ × 2 = 0.00542

**1**

Concentration NaOH = mol / vol = 0.00542 / 0.025 = 0.2168

**1**

0.217 (mol / $dm^3$)

*accept 0.217 with no working for **4** marks*

**1**

*accept 0.2168 with no working for **3** marks*

(f) $\frac{20}{1000}$ × 0.18 = no of moles

**or**

0.15 × 40 g

**1**

0.144 (g)

1

*accept 0.144g with no working for **2** marks*

**[16]**

## Q10.

(a) cool

1

to −34 °C

*allow temperatures below −34 °C but above −196 °C*

1

(b) recycled (to the reactor)

1

(c) $825 \times \frac{2}{3}$

1

= 550 ($dm^3$)

1

*an answer of 550 ($dm^3$) scores **2** marks*

(d) a lower pressure would decrease the equilibrium yield

1

a lower temperature would make the reaction too slow

1

(e) nitrogen / N

1

(f) **B** and **C**

1

contain nitrogen, phosphorus and potassium

1

(g) (**B**)

any **two** from:

- more stages
- uses more energy
- uses more raw materials
- takes longer

*allow converse for **C***

2

**[12]**