Mekanika: Majalah Ilmiah Mekanika

Title of The Article (Times New Roman 16, 1.5 space, Capital each word)

First Author[1*], Second Author[1], Third Author[2] (Times New Roman, 12) (1.5 Space)

1 Affiliation, City, Country (Times New Roman, 10) (1 Space)
2 Affiliation, City, Country (Times New Roman, 10) (1.5 Space)

*Corresponding Author's email address (Times New Roman, 10) (2.5 Space)

Keywords:
Mechanics
Composites
Design
Materials
Energy

(max 5 keywords)
(times new roman, 10)
(1 space)
(1 Space)

Abstract
Abstract is written in this space. The format is Times New Roman, 11 pt and 1 space. Abstract should be about 200 words maximum. Abstract has to consist of (1) Background: Place the question addressed in a broad context and highlight the purpose of the study; (2) Methods: Describe briefly the main methods or treatments applied; (3) Results: Summarize the article's main findings; and (4) Conclusions: Indicate the main conclusions or interpretations. The abstract should be an objective representation of the article, it must not contain results which are not presented and substantiated in the main text and should not exaggerate the main conclusions. This must not be identic to Conclusion section.

1 Introduction (Times New Roman, 12, 1.5 Space (Use "Section" Style in your Word))

Body paragraph format is Times New Roman 12pt, 1 Space. The paragraph is started with indent left 1. The introduction should briefly state the background of the study, the research gaps, novelty (what is different) and the aim of your study in last paragraph. Spacing per paragraph is 8pt.You should show the related references in this section to satisfy the reviewers and your prospected readers. You can use [1,2] and [3-6] for the citation format. We **strongly recommend** the authors to use **Mendeley** to edit citation format and bibliography style into Mekanika's style. You can learn **how to insert Mekanika's style to your Mendeley database** here. You can also download XML file.

2 Experimental Methods (Times New Roman, 12, 1.5 Space (Use "Section" Style in your Word))

2.1 Materials (Times New Roman, 12, 1.5 Space (Use "Sub Section" Style in your Word)) *(use number if necessary)*

The format is the same as previous section. In this section, you can write methods you use in your research. If it is not experimental (numerical or simulation) you can change the section name corresponding to your methods. If you use a specific material in your research, you should explain clearly the materials such as the specification, where you get it and important information. In terms of figure, this should be presented as shown below.

https://dx.doi.org/10.20961/mekanika.v19i1.39924

Revised 17 March 2020; received in revised version 20 March 2020; Accepted 21 March 2020
Available Online 31 March 2020

2579-3144
© 2020 Mekanika: Majalah Ilmiah Mekanika. All right reserved



Figure 1. Name figure (times new roman, 11 pt, 1.5 space)

Figure should be clear and the caption should represent the figure. if there are more than 1 picture in a figure you can adjust it like example below

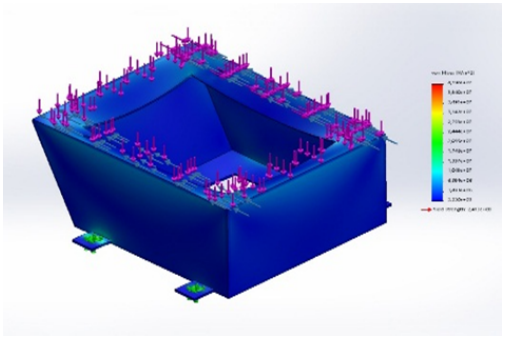

(a)

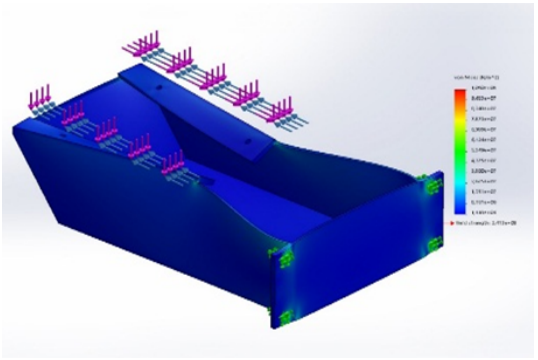

(b)

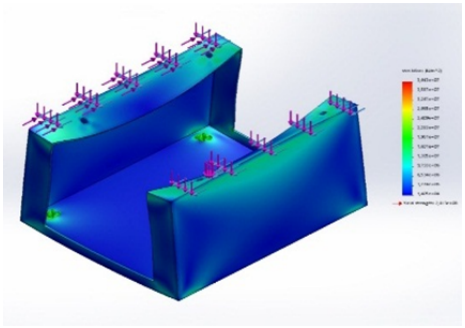

(c)

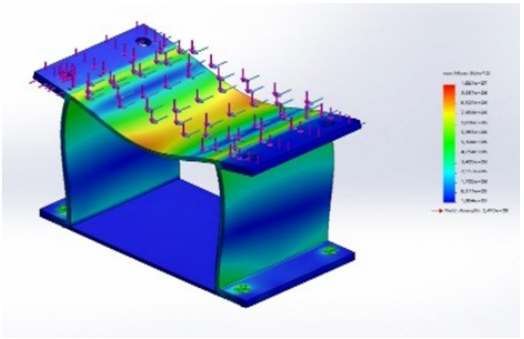

(d)

Figure 1. Name figure: (a) figure, (b) figure, (c) figure, and (d) figure (times new roman, 11 pt, 1.5 space)

If you take the figure from published articles please make sure to get the permission before submitting your manuscript. Table is presented below.

Table 1. This is a table (times new roman, 11 pt, 1.5 space)

Title 1	Title 2	Title 3
entry 1	data	data
entry 2	data	data [1]

Equation can be written as presented below,

$$A = 1 \quad (1)$$

3 Result and Discussion

In discussion section, you should explain the result you obtain and compare it to the published paper or literature review existed. The findings and their implications should be discussed in the broadest context possible. Future research directions may also be highlighted.

4 Conclusion

The conclusion should be short and clear. It must not be identic to the abstract though the content is the same. You should highlight your findings in this study.

5 Acknowledgement

This section is optional depending on the funding of your study.

References

1. R. Karnani, M. Krishnan, and R. Narayan, "Biofiber-reinforced polypropylene composites," *Polym. Eng. Sci.*, vol. 37, no. 2, pp. 476–483, 1997. (Times New Roman 11pt, 1 space)
2. W. Czaja, D. Romanovicz, and R. Malcolm Brown, "Structural investigations of microbial cellulose produced in stationary and agitated culture," *Cellulose*, vol. 11, no. 3–4, pp. 403–411, 2004.
3. Y. Xie, C. A. S. Hill, Z. Xiao, H. Militz, and C. Mai, "Silane coupling agents used for natural fiber/polymer composites: A review," *Compos. Part A Appl. Sci. Manuf.*, vol. 41, no. 7, pp. 806–819, 2010.
4. J. Rao, L. Bao, B. Wang, M. Fan, and L. Feo, "Plasma surface modification and bonding enhancement for

bamboo composites," *Compos. Part B Eng.*, vol. 138, pp. 157–167, 2018.
5. G. N. Ramaswamy, T. Sellers, and W. Tao, "Kenaf nonwovens as substrates for laminations," *Ind. Crops Prod.*, vol. 17, no. 1, pp. 1–8, 2003.
6. W. Tao, T. A. Calamari, and L. Crook, "Carding kenaf for nonwovens," *Text. Res. J.*, vol. 68, no. 6, pp. 402–406, 1998.

*We **strongly recommend** the authors to use **Mendeley** to edit citation format and bibliography style into Mekanika's style.