A

Mini Project Report

On

“IMPLEMENTATATION OF LIFI ON A SPEAKER”

Guided By:-Mr. Manikant Kumar

Submitted By:-

Amar Mohanta (ET190036)

Pratyusha Kumar Nayak (ET190037)

Aman Kumar (ET190038)

Vishwajeet Kumar (ET190039)

Aman Javed (ET190040)



Department of Electronics and Telecommunication Engineering

C.V. Raman College of Engineering, Bhubaneswar,December, 2019



C. V. Raman College of Engineering, Bhubaneswar

Department of Electronics and Telecommunication Engineering

CERTIFICATE OF APPROVAL

This is to certify that we have examined and approved the mini project for 1st semester in Electronics and Telecommunication Engineering entitled **"IMPLEMENTATATION OF LIFI ON A SPEAKER"** submitted by Amar Mohanta (ET190036),Pratyusha Kumar Nayak (ET190037), Aman Kumar (ET190038), Vishwajeet Kumar (ET190039) and Aman Javed (ET190040)

We here by accord our approval of it as a mini project work carried out and presented in a manner required for its acceptance for the partial fulfillment for the Bachelor Degree of Technology in Electronics and Telecommunication Engineering for which it has been submitted. This approval does not necessarily endorse or accept every statement made, opinion expressed or conclusions drawn as recorded in this mini project, it only signifies the acceptance of the mini project for the purpose it has been submitted .

(Project Guide) **(External)** **(HOD ETC)**

ACKNOWLEDGEMENT

We would like to express our sincere gratitude to our Head of Department Dr. P.Kanungo Sir for providing his invaluable guidance, comments and suggestions throughout the course of the project.We would specially thank Mr. Manikant Sir for constantly motivating us to work harder and for getting us the Project ideas. We would like to also thank him for his assistance in the help during the preparation of the sample.

We cannot express enough thanks to the college for their continued support and encouragement. We offer our sincere appreciation for the learning opportunities provided by our college.

Our completion of this project could not have been accomplished without the support of our parents. Thanks to them as well. The countless times they kept us during our hectic schedules will not be forgotten. It was a great comfort and relief to know that they were willing to provide management of my household activities while I completed my work .
Their encouragement when the times got rough are much appreciated and duly noted. Our heartfelt thanks.

Thanks for the classmates as well for their continued support and comfort.

Thanks to everyone associated with the project at every micro level.

Thanks to our college and all members associated with the college.

AMAR MOHANTA (ET190036)

P.K NAYAK (ET190037)

AMAN KUMAR (ET190038)

VISHWAJEET KUMAR (ET190039)

Table of Contents

List of Figures……..5

Chapter 1: Introduction…….....

6

Chapter 2: Requirement and Analysis…….

7

Chapter 3: System Design…….....

8

Chapter 4: Implementation and Testing……..9

Chapter 5: Results and

Discussion…….....10

Chapter 6:

Conclusion…….....11

References…….....1

2

List of Figures

1. **Fig 1 The proposed Lifi based audio system - Page No 12**
2. **Fig 2 Circuit of the Lifi Dongle - Page No 12**

CHAPTER 1

INTRODUCTION

Li-Fi (short for *light fidelity*) is wireless communication technology, which utilizes light to transmit data and position between devices.

The term was first introduced by Harald Haas during a 2011 TEDGlobal talk in Edinburgh.

In technical terms, Li-Fi is a light communication system that is capable of transmitting data at high speeds over the visiblelight, ultraviolet, and infrared spectrums. In its present state, only LED lamps can be used for the transmission of visible light.

The technology is actively being developed by several organizations across the globe.

CHAPTER 2

REQUIREMENT AND COST ANALYSIS

BC 337 npn transistors	Rs.15
White Led (1watt)	Rs.3
10 resistors	Rs 10
3 capacitors	Rs 6
2-Pin connectors	Rs 10
9V battery	Rs. 15
Stereo or mono audio Jack	Rs. 30
Speakers	Rs.100
Solar panel (200mA)	Rs 120
Audio sources (Mobile Phone)	

Grand Total Rs.309

CHAPTER 3

SYSTEM DESIGN

Block Diagram:-

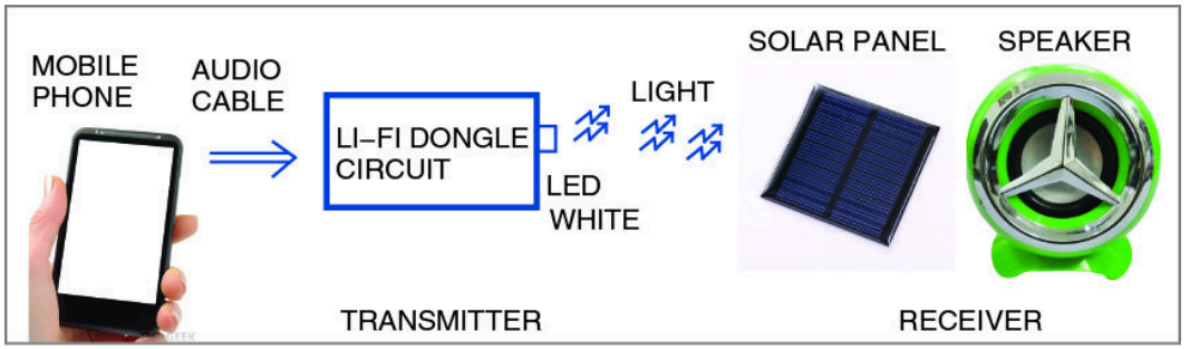

Fig. 1: The proposed Li-Fi based audio system

Fig 1

Circuit Diagram:-

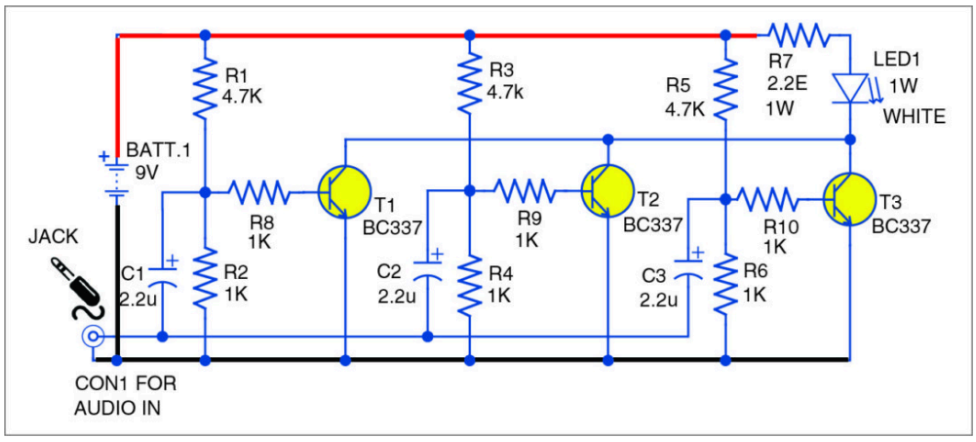

Fig. 3: Circuit of the Li-Fi dongle

Fig2

CHAPTER 4

IMPLEMENTATION AND TESTING

Our team had the idea of Lifi based Speakers but it was a challenge to convert the idea from pen & paper into reality. We implemented the circuit diagram and assembled all the instruments and tried to prepare a working model of the circuit which was a self learning activity for our team.

As we tested the circuit diagram successfully in the first attempt itself, it gave us inspiration and immense aspiration for our future projects.

CHAPTER 5

RESULTS AND DISCUSSION

We concluded that the speakers worked on the principles of Data Transmission using Lifi and we were able to transfer the audio data across the channel with the use of Light and corresponding LIFI technology.

CHAPTER 6

CONCLUSION

We hereby conclude that the speaker works using the principle of Lifi Technology. The project is basically an implementation of Lifi Technology on a speaker. There are good future scopes and areas of research in the diverse field of Light Fidility (LIFI) which may open wide range of advancements in the field of Science & Technology and data transfer may seem to be something different from what we have today. We need to focus on implementation of Lifi in the development of Science and Technology as well as the overall development of the society and Nation Building process.

That is all about the Project.

REFERENCES

1. Electronicsforyou.com
2. alldatasheet.com
3. Electronic Devices and Circuit Theory-Robert L. Boylestad, Louis Nashelsky 2002