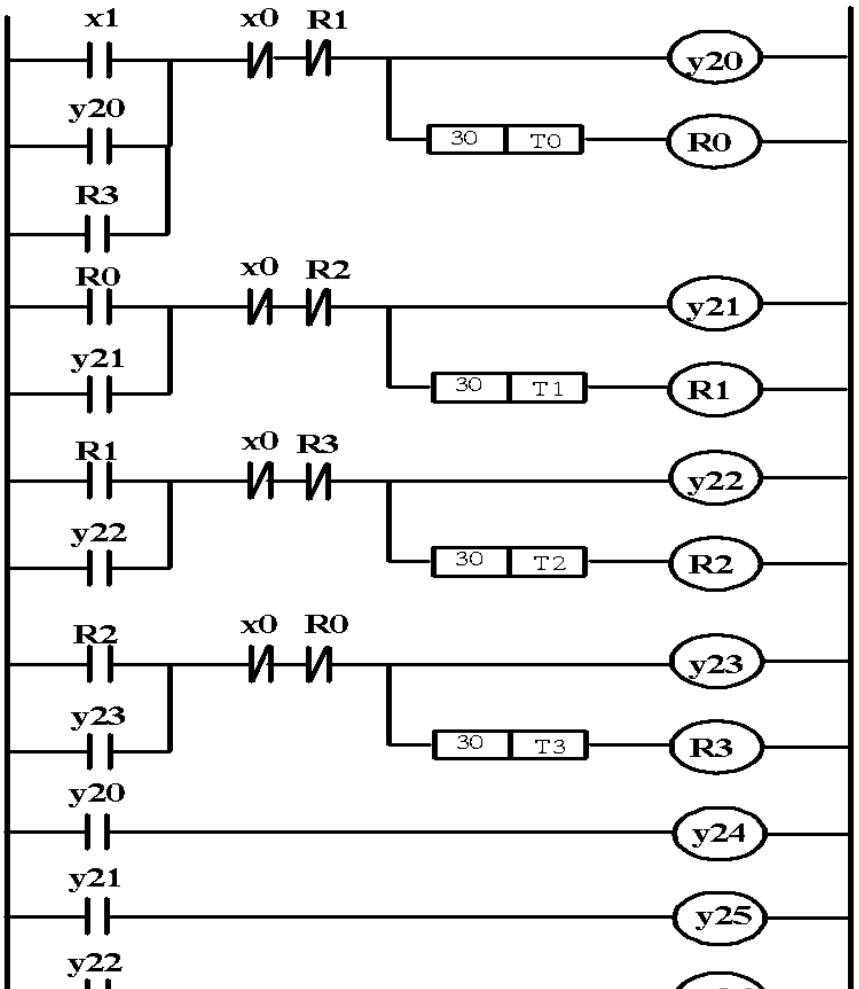
x1
x0
R1
y20
y20
30
T0
R0
R3
R0
x0
R2
y21
y21
30
T1
R1
R1
x0
R3
y22
y22
30
T2
R2
R2
x0
R0
y23
y23
30
T3
R3
y20
y24
y21
y25
y22