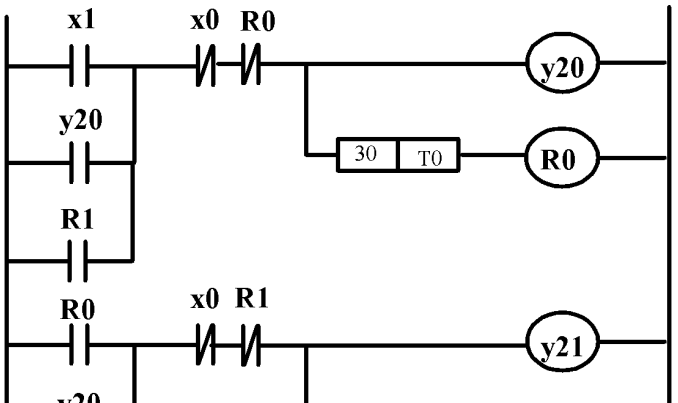
x1
x0
R0
y20
y20
30
T0
R0
R1
R0
x0
R1
y21

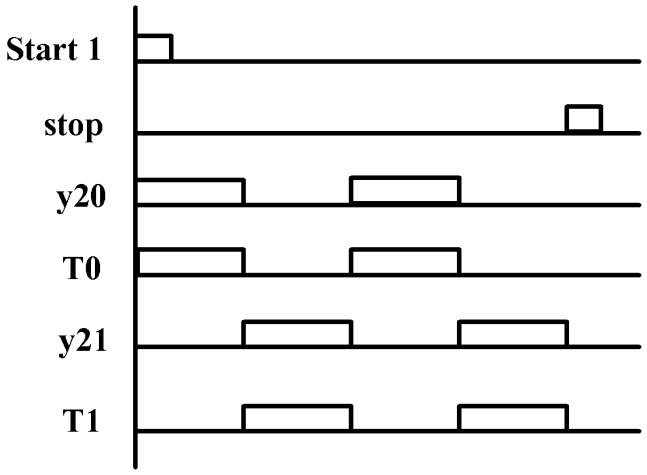
Start 1
stop
y20
T0
y21
T1