NOTES

Engineering Graphics

Prepared by

Dr.Bibin K S

Course Plan

No	Section A	Hrs
1.	**Module-1**	
1.1.	Introduction to graphics, types of lines, Dimensioning	1
1.2.	Concept of principle planes of projection, different quadrants, locating points on different quadrants	1
1.3.	Projection of lines, inclined to one plane. Lines inclined to both planes, Trace of line	2
1.4.	Line rotation method & problems on this method.	2
1.5.	Trapezoid method & problems on this method.	2
1.6.	More Problems in lines using both methods	1
2.	**Module-2**	
	Introduction of different solids, Simple position plan and elevation of solids (Triangular, Rectangle, Square, Pentagonal and Hexagonal Prisms, Pyramids, Cone and Cylinder)	1
2.1.	Problems on views of solids inclined to one plane	1
2.2.	Problems on views of solids inclined to both planes (Triangular, Rectangle, Square, Pentagonal and Hexagonal Prisms)	2
2.3.	Practice problems on solids inclined to both planes (Triangular, Rectangle, Square, Pentagonal and Hexagonal Pyramids)	2
2.4.	Problems on solids inclined to both planes (Cone and Cylinder)	1
3.	**Module-3**	
3.1.	Introduction to section of Solids. AIP and AVP. Principle of locating cutting points and finding true shape	1
3.2.	Problems on sections of different solids (Prisms, Pyramids, Cone, Cylinder)	3

3.3.	Problems when the true shape is given	1
Assignment-1		
3.4.	Development of surfaces of the solids (Prisms, Cylinder, Pyramids & Cone) sectioned solids	2
3.5.	Shortest distance between two points on the surface of the solids.	1
4.	**Module-4**	
4.1.	Principle of Isometric View and Projection. Problems on Prisms.	1
4.2.	Problems on Pyramids, Cone & Cylinder.	2
4.3.	Problems on Frustum of Pyramid & Cone.	1
4.4.	Problems on combination of different solids.	2
5.	**Module-5**	
5.1.	Introduction to perspective projection, Problems on prisms	2
5.2.	Problems on pyramids	1
5.3.	Practice on conversion of pictorial views into orthographic views	3
Assignment-2		
Section B		
1.	Introduction to CAD and software. Familiarising features of 2D software.	1
2.	Practice session on 2D drafting (Pictorial view to orthographic views)	3
3.	Introduction to solid modelling (3D modelling)	1
4.	Practice session on 3D modelling	3
Assignment-3		
Revision		

1.	Projections of lines & solve previous Univ. QP	5
2.	Projections of solids & solve previous Univ. QP	5
3.	Section of Solids & Developments & solve previous Univ. QP	5
4.	Isometric projection & solve previous Univ. QP	5
5.	Perspective & multi-view projection & solve previous Univ. QP	5

Introduction to engineering Drawing

Engineering drawing is a graphical way to convey an unambiguous and accurate description necessary for engineered items. It is made in accordance with the standard conventions for layout, nomenclature, interpretation, appearance, size, etc. The purpose of engineering drawing is to provide exact geometrical configuration for the construction or analysis of machines, structures, or systems. Today, the mechanics of the drawing task has been largely automated and greatly accelerated through a number of computer softwares.

International and National codes

Engineering drawing follows certain codes of practice. International Organisation for Standardisation (ISO) recommended international standards for engineering drawing in 1982. At present, these are adopted by 164 countries out of 205 total countries in the world. The standards published by ISO are designated as ISO XXXX:YEAR, where XXXX represents a unique number allocated to the standard and the YEAR represents the year of publication. If a standard has been published before and is updated, the number remains the same as the previous number but the YEAR changes to the new year of publication.

Each country has its own standard organisation. For example, in the United Kingdom (UK), it is the British Standards Institution (BSI), in the United States of America (USA), it is the American National Standards Institute (ANSI) and in Germany, it is the Deutsches Institut fur Normung (DIN). In India, the Bureau of Indian Standards (BIS) is engaged in the preparation and implementation of standards, operation of certification schemes both for products and systems, organisation and management of testing laboratories, creating consumer awareness and maintaining close liaison with international standards bodies. The standards published by BIS, irrespective of developed or adopted from ISO, are designated as IS YYYY:YEAR, where YYYY represents another unique number allocated to the standard and the YEAR represents the year of publication. In addition to this, the BIS also publishes some special bulletin which contains a copy of Indian Standards defining special area of interest.

Drawing instruments

1. Drawing board
2. Mini drafter
3. Drawing sheet
4. Drawing Pencil
5. Compass (pivot joint type and spring bow type)
6. Divider (pivot joint type and spring bow type)
7. Protractor
8. Ruler (scale)
9. French curves
10. Set squares
11. Eraser or rubber
12. Sheet fasteners
13. Template
14. Pencil cutter
15. Sand paper pad
16. Brush or towel cloth

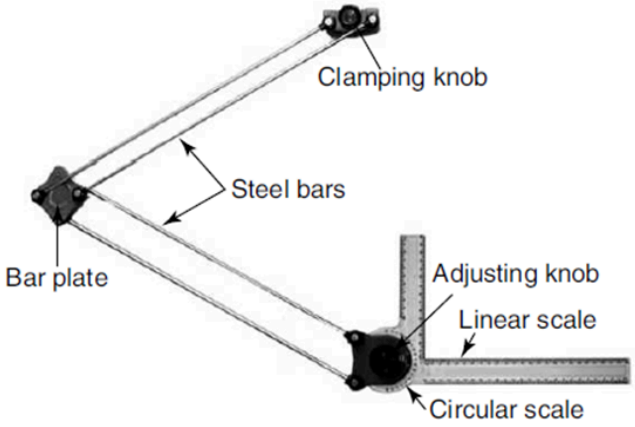

Fig. *Mini drafter*

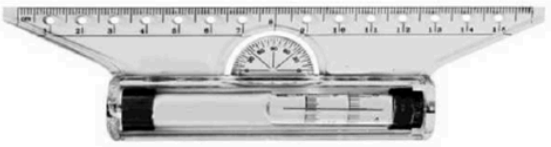

Fig. *Rolling ruler*

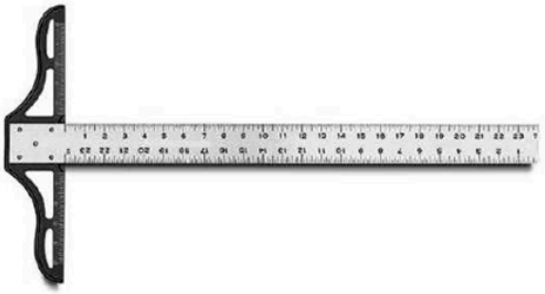

Fig. *T-square*

Drawing sheet

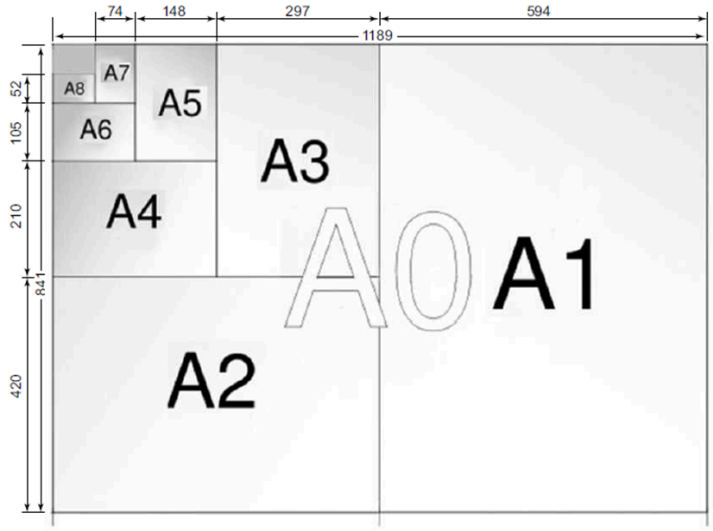

Table *Paper sizes for ISO-A series*

Series	*Paper size (mm × mm)*
A0	841 × 1189
A1	594 × 841
A2	420 × 594
A3	297 × 420
A4	210 × 297
A5	148 × 210
A6	105 × 148
A7	74 × 105
A8	52 × 74

Table *Preferred sizes of untrimmed sheet, trimmed sheets and drawing space*

Designation	*Untrimmed sheet (in mm)*	*Trimmed sheet (in mm)*	*Drawing space (in mm)*	*Number of grid reference fields*
A0	880 × 1230	841 × 1189	821 × 1159	16 × 24
A1	625 × 880	594 × 841	574 × 811	12 × 16
A2	450 × 625	420 × 594	400 × 564	8 × 12
A3	330 × 450	297 × 420	277 × 390	6 × 8
A4	240 × 330	210 × 297	180 × 277	4 × 6

Grading of Pencils

Pencils are graded according to the proportion of graphite to clay mixture in the pencil lead. A set of pencils ranges from hardest to softest as follows:

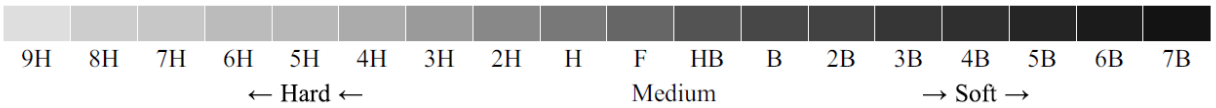

A pencil that is considered the medium grade is designated by the letter HB. The grade becomes harder shown by the value of the figure preceding the letter H, viz. 2H, 3H, 4H, etc. Similarly, the grade becomes softer shown by the figure preceding the letter B, viz. 2B, 3B, 4B, etc. A hard pencil produces thin, grey line while a soft pencil produces thick line.

Lines, lettering and dimensioning

Table *Basic types of lines*

S. No.	*Representation*	*Description*
01		Continuous line
02		Dashed line
03		Dashed space line
04		Long dashed dotted line
05		Long dashed double-dotted line
06		Long dashed triplicate-dotted line
07		Dotted line
08		Long dashed short dashed line
09		Long dashed double-short dashed line
10		Dashed dotted line
11		Double-dashed dotted line
12		Dashed double-dotted line
13		Double-dashed double-dotted line
14		Dashed triplicate-dotted line
15		Double-dashed triplicate-dotted line

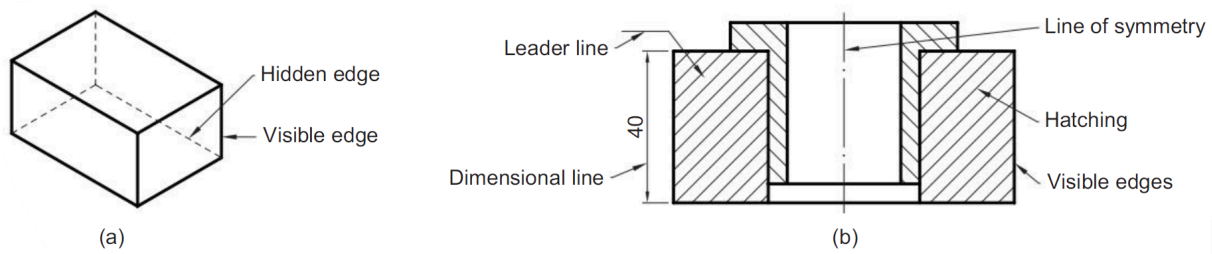

Applications of popular type of lines for depicting **(a)** *visible and hidden edges* **(b)** *hatching, line of symmetry, dimensional line and leader line*

Dimensioning

Dimensions are indicated on the drawing to define the size characteristics such as length, breadth, height, diameter, radius, angle and location of hole, slot, etc. The Bureau of Indian standards in its bulletin IS 11669:1986 (reaffirmed 1999) recommends general principle of dimensioning in technical drawing.

Dimensioning Terminology

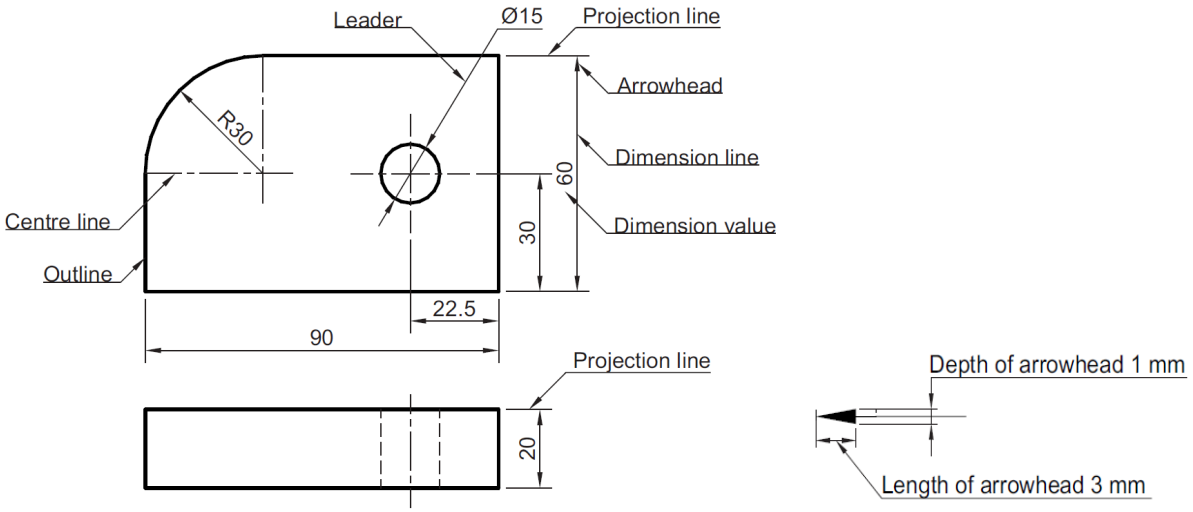

Symbols and notes for dimensioning

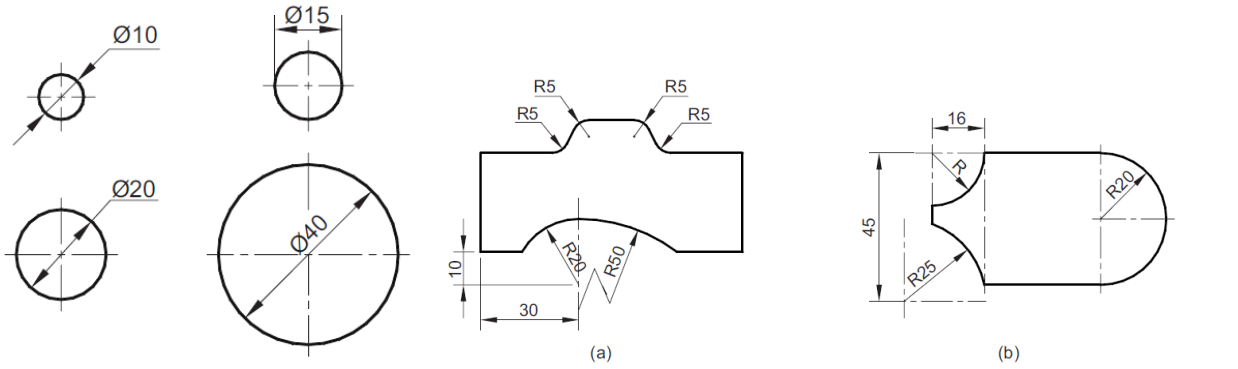

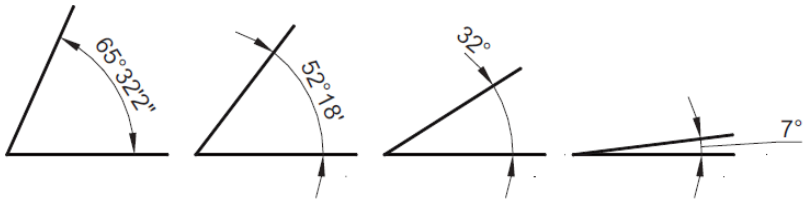

Methods of angle dimensioning

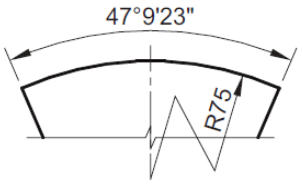

Dimensioning curve using angle dimensioning

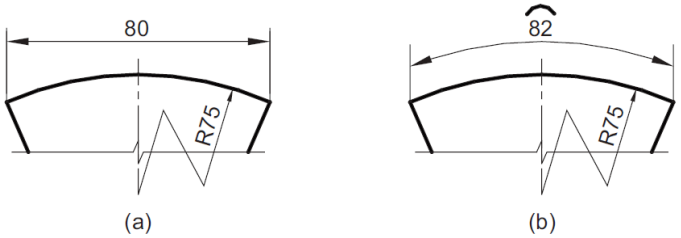

Dimensioning curve using **(a)** *chord length* **(b)** *arc length*

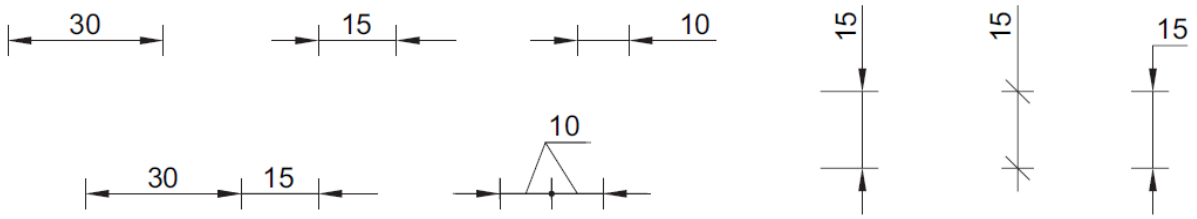

Fig *Methods for arrowhead termination*

Scale

I.S. have recommended the following standard scales.

Scale

Refers to drawing size → **1 : 2** ← Refers to Actual size

Full Scale	1:1			
Reduced Scale	1 : 2	1 : 2.5	1 : 5	1 : 10
	1 : 20	1 : 50	1 : 100	1 : 200
Enlarged Scale	10 : 1	5 : 1	2 : 1	

Geometrical constructions

Bisect a Line and an Arc

Problem 3.1 *Bisect (a) an 80 mm long line and (b) a circular arc AB.*

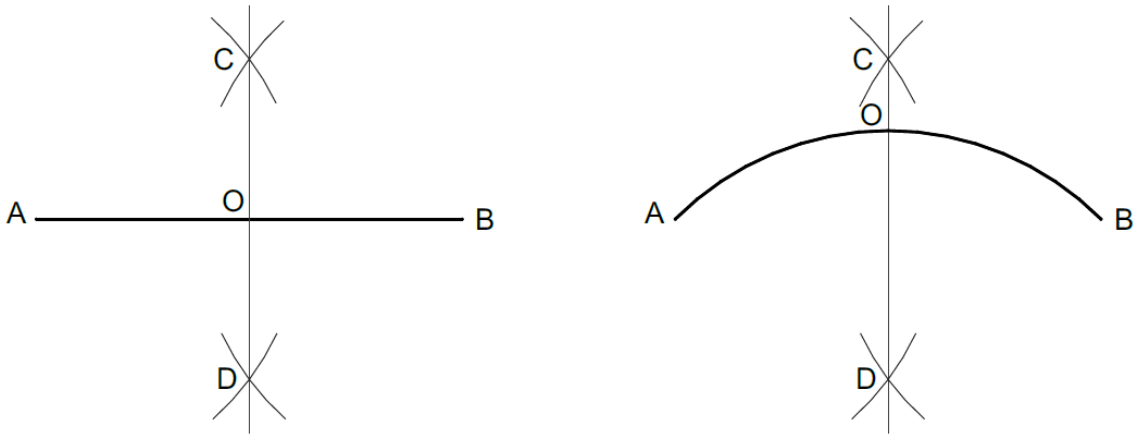

Fig. 3.1 *Bisector to* **(a)** *a line AB* **(b)** *a circular arc AB*

Construction Refer to Figs. 3.1(a) and (b).

1. Draw (a) an 80 mm long line *AB* or (b) a given arc *AB*.

2. Set the compass to a radius greater than half of the length AB. With centre A, draw arcs on both sides of AB.
3. With the same radius but centre B, draw arcs on both sides of AB to intersect previous drawn arcs at points C and D.
4. Join C to D. This is the perpendicular bisector which bisects the line/arc AB.

Perpendicular to a line

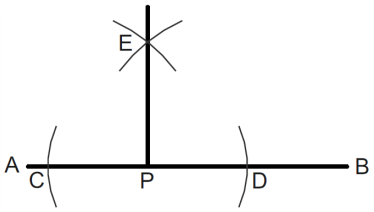

1. Set the compass to any convenient radius and with centre P draw an arc to meet the line AB atpoints C and D.
2. Reset the compass to a radius greater than half of CD. With centres C and D respectively draw arcs to intersect at point E.
3. Join P to E. Line PE is perpendicular to AB.

Perpendicular from a Point outside the Line

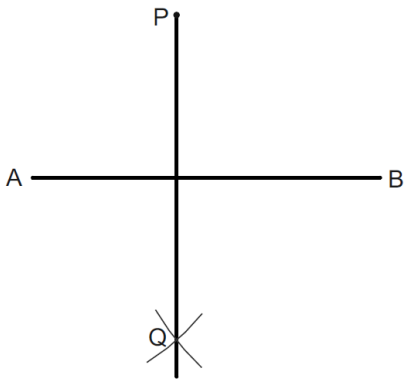

1. Draw an arc with centre A and radius AP.
2. Draw another arc with centre B and radius BP to intersect the previous drawn arc at point Q. It may be noted that the points P and Q lies on the opposite sides of the line AB.
3. Join P to Q. Line PQ is perpendicular to AB.

Parallel lines

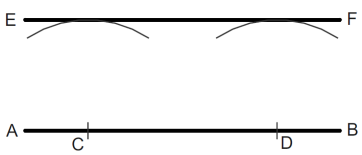

1. Mark any two points C and D on line AB. Draw two arcs each of radius 50 mm (distance of parallel
2. line from AB) with centres C and D, respectively

3. 2. Draw a line EF touching both of these arcs. Line EF is parallel to the line AB.

Divide a line into Equal Parts

Example: Divide an 80 mm long straight line into seven equal parts.

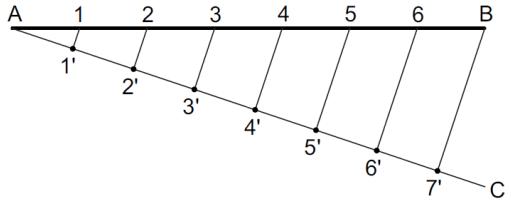

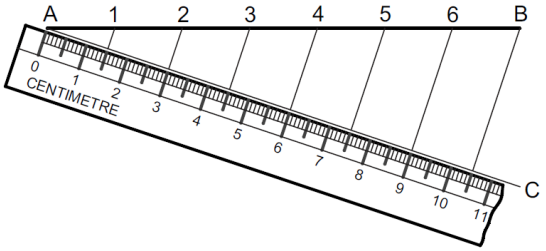

1. Draw an 80 mm long straight line *AB*.
2. Draw another line *AC* at any convenient acute angle with *AB*.
3. Set the divider to a convenient length and mark off seven equal spaces on *AC*. Let these points be 1′, 2′, 3′, 4′, 5′, 6′, and 7′.
4. Join 7′ to *B*.
5. Set the drafter along 7′*B* and draw parallel lines through points 1′, 2′, 3′, 4′, 5′ and 6′ to meet *AB* at points 1, 2, 3, 4, 5 and 6 respectively. These points divide *AB* in seven equal parts.
   A scale can also be used to lay off equal intercepts on line *AC* as shown in Figure 3.5(b).

Divide a line into a given Proportion

Example: Divide an 80 mm long straight line in proportion of 2:3:4.

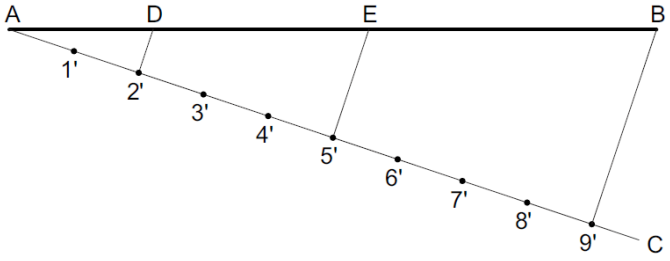

1. Draw an 80 mm long straight line *AB*.
2. Draw a line *AC* at any convenient acute angle with *AB*.
3. Set the divider to a convenient length and mark off (2 + 3 + 4 = 9) nine equal spaces on *AC*. Let the points be 1′, 2′, 3′, 4′, 5′, 6′, 7′, 8′, and 9′.

Divide a circle

Example: Divide a 50 mm diameter circle into 12 equal segments.

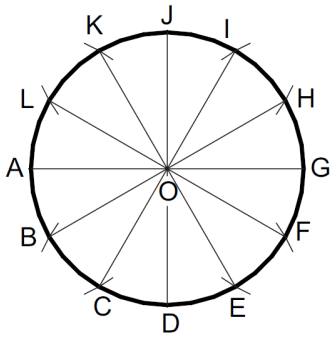

1. Draw a circle with centre *O* and 50 mm diameter.
2. Using drafter, draw diameters *AG* and *DJ*, perpendicular of each other.
3. Draw arcs of radius equal to the radius of the circle (= 25 mm) and centre *A* to meet the circumference of the circles at points *C* and *K*.
4. Similarly, draw arcs of the same radius (= 25 mm) and centres *D*, *G* and *J* respectively, to meet the circumference of the circle at points *B*, *F*, *E*, *I*, *H* and *L*. The points divide the circumference of the circle into 12 equal segments.

Introduction to Projection

Perspective Projection

The observer is assumed to be stationed at finite distance from the object. The height of the buildings appears to be reducing as we move away from the observer. In perspective projection, all lines of sight start at a single point and is schematically shown in figure.

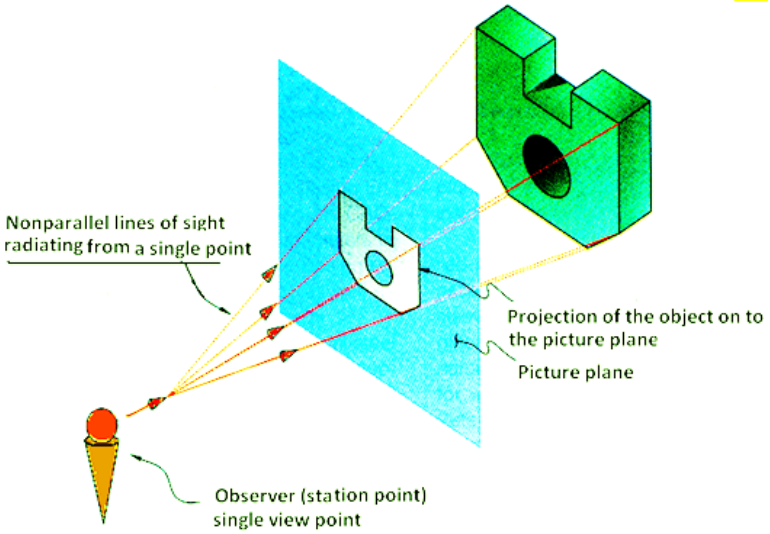

Orthographic projection

Distance from the observer to the object is infinite projection lines are parallel – object is positioned at infinity.

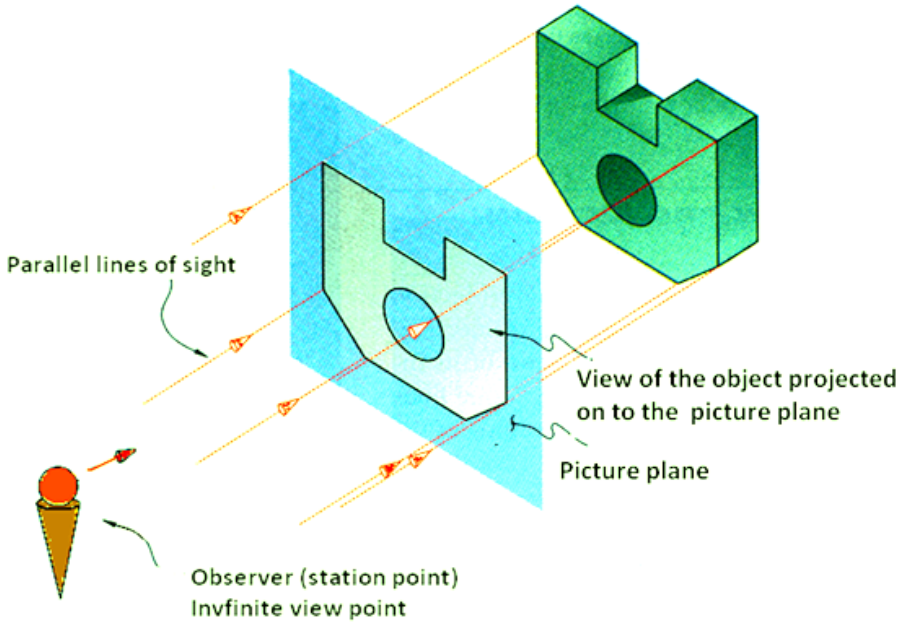

The term orthographic is derived from the word 'orthos' which means perpendicular. An observer is considered to look at the given object from an infinite distance such that the rays of sight from the eyes are parallel to each other and perpendicular to the plane of projection, as shown in Fig.(a) and (b). These rays of sight are called projectors. Thus, the orthographic projection is a parallel projection in which the projectors are parallel to each other and perpendicular to the plane of projection

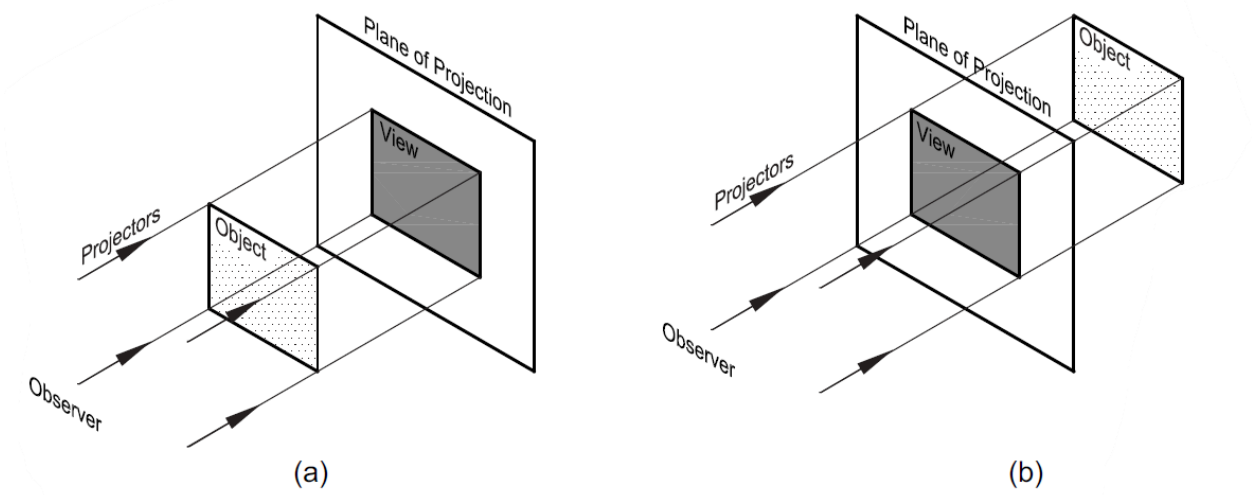

(a) *In front of the plane of projection* **(b)** *Behind the plane of projection*

Now let us get familiar with the concepts and principles of orthographic projections. Orthographic projections are mainly obtained on two principal planes (also known as reference planes) namely vertical plane and horizontal plane as shown in Fig (a) below. These principal planes are perpendicular to each other and they divide the space into four segments or quadrants. They are popularly called angles.

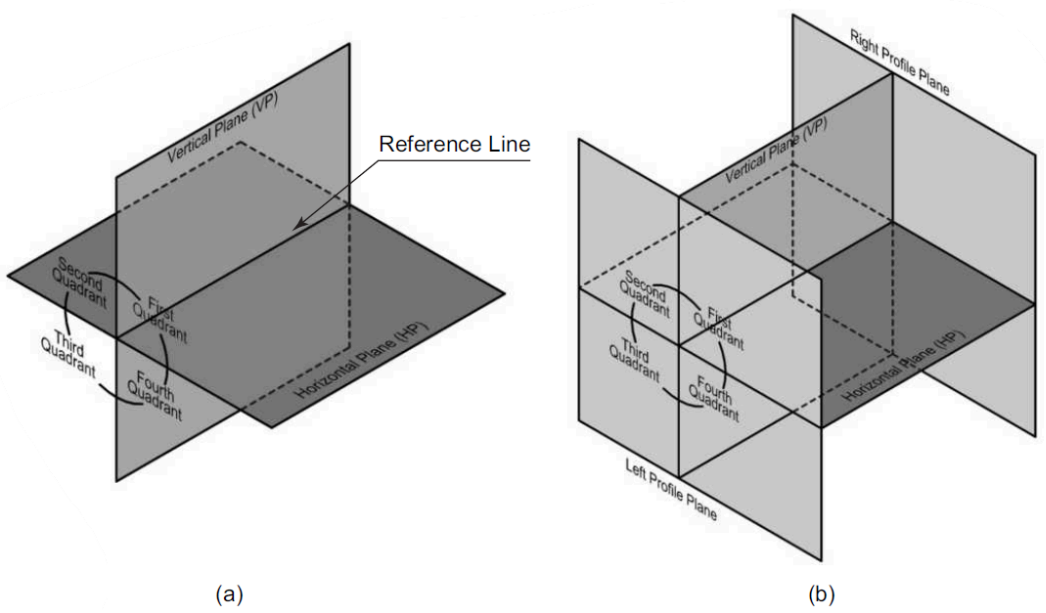

(a) *Principal planes* **(b)** *Vertical, horizontal and profile planes*

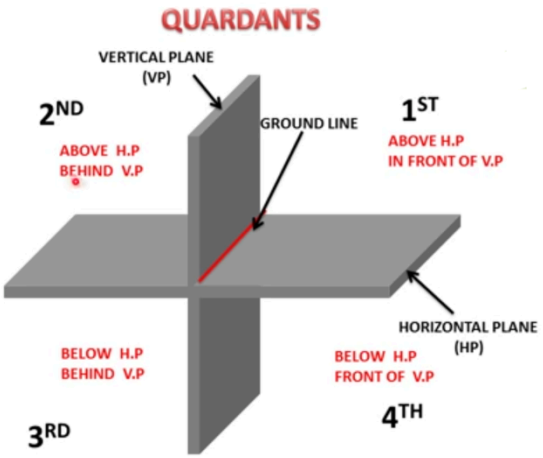

Problem 8.10 *Draw the projections of the following points on a common reference line keeping the distance between their projectors 30 mm apart.*

(a) Point A is 20 mm below the H.P. and 50 mm in front of the V.P.
(b) Point B is in the H.P. and 40 mm behind the V.P.
(c) Point C is 30 mm in front of the V.P. and in the H.P.
(d) Point D is 50 mm above the H.P. and 30 mm behind the V.P.
(e) Point E is 20 mm below the H.P. and 50 mm behind the V.P.
(f) Point F is in the V.P. and 50 mm below the H.P.

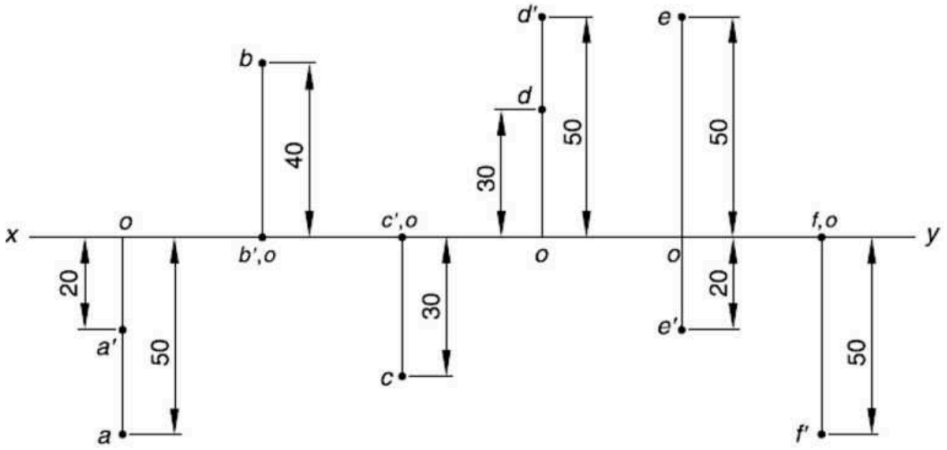

Module I
Projection of Lines

A straight line is defined as the locus of a point which moves unidirectionally. The straight line can also be defined as the shortest distance between two points. The projections of straight lines can be drawn by joining the respective projections of its end points. The word 'line' is used in text for straight lines for the sake of simplicity. The actual length of the line is commonly called true length and is denoted by T.L.

Orientation of a straight line

A straight line may be in one of the following positions.
1. Line parallel to both horizontal plane (H.P.) and vertical plane (V.P.).
2. Line perpendicular to H.P. (and parallel to V.P.).
3. Line perpendicular to V.P. (and parallel to H.P.).
4. Line inclined to H.P. and parallel to V.P.
5. Line inclined to V.P. and parallel to H.P.
6. Line situated on H.P.
7. Line situated in V.P.
8. Line situated on both H.P. and V.P. (i.e., on the reference line, xy).
9. Line inclined to both the reference planes.
(a) Line inclined to both H.P. and V.P. such that $\theta + \phi < 90°$.
(b) Line inclined to both H.P. and V.P. such that $\theta + \phi = 90°$.
Projections of a straight line lying in the first angle shall have its front view above xy and the top view below xy. A clear concept of orthographic projections and projections of points is required to understand the projections of straight lines.

Trace of a straight line

The points of intersection of a straight line (extended if necessary) with the reference plane are called tracesof that line.
1. **Horizontal trace:** The point at which the line (extended if necessary) intersects the H.P. is known as horizontal trace and is denoted by either H.T. or letter h. The front view of the horizontal trace lies on xy and is denoted by h'.
2. **Vertical trace:** The point at which the line (extended if necessary) intersects the V.P. is known as vertical trace and is denoted by either V.T. or letter v'. The top view of the vertical trace lies on xy and is denoted by v.

LINE PARALLEL TO BOTH H.P. AND V.P.

Problem 9.1 *A 50 mm long line PQ is parallel to both the H.P. and the V.P. It is 25 mm in front of the V.P. and 60 mm above the H.P. Draw its projections and determine the traces.*

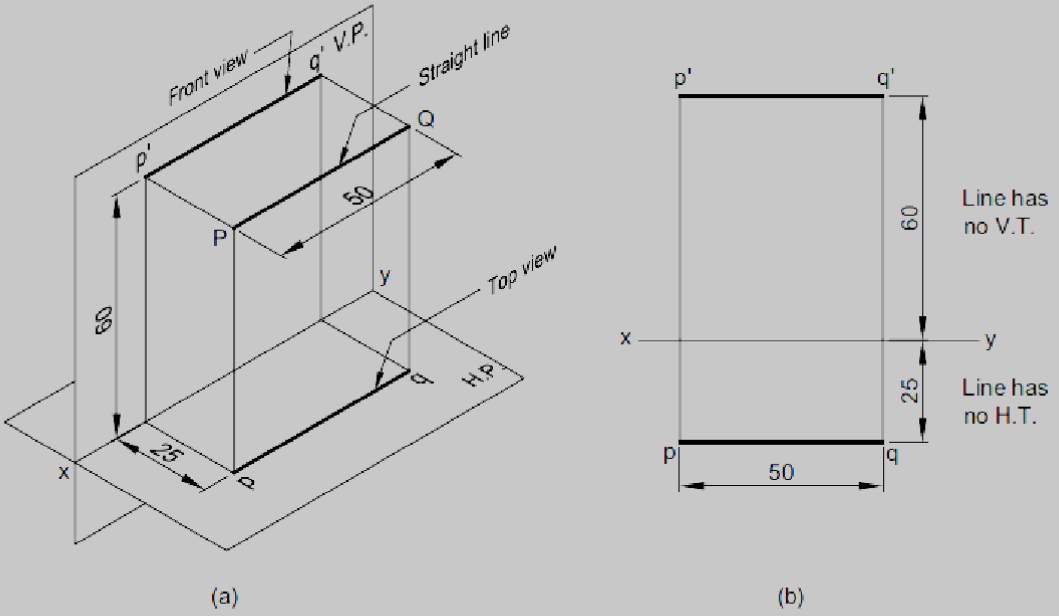

Fig. 9.1 *Line parallel to both H.P. and V.P.* **(a)** *Pictorial view* **(b)** *Orthographic views*

LINE PERPENDICULAR TO H.P.

Problem 9.2 *A 60 mm long line PQ has its end P 20 mm above H.P. The line is perpendicular to the H.P. and 40 mm in front of the V.P. Draw its projections and locate the traces.*

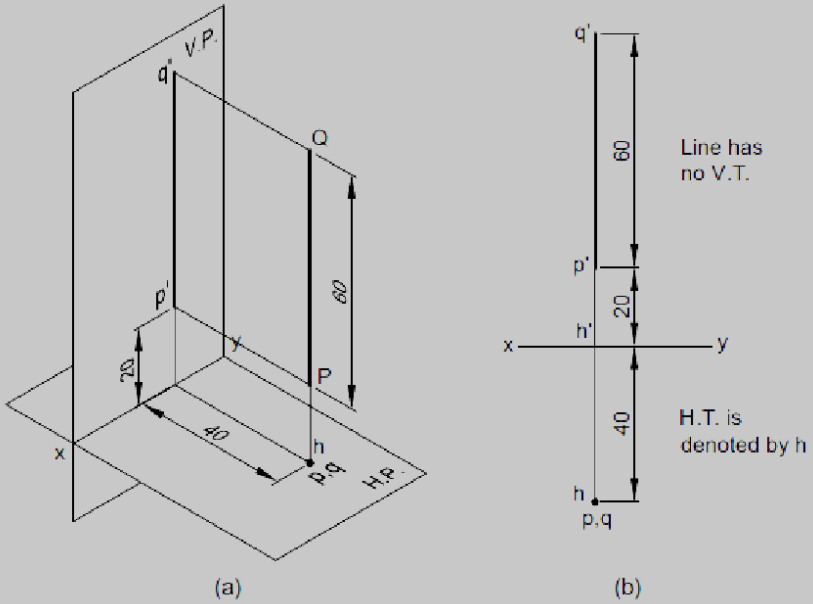

LINE PERPENDICULAR TO V.P.

Problem 9.3 *A 60 mm long line PQ has its end P 20 mm in front of the V.P. The line is perpendicular to the V.P. and 40 mm above the H.P. Draw the projections of the line and determine its traces.*

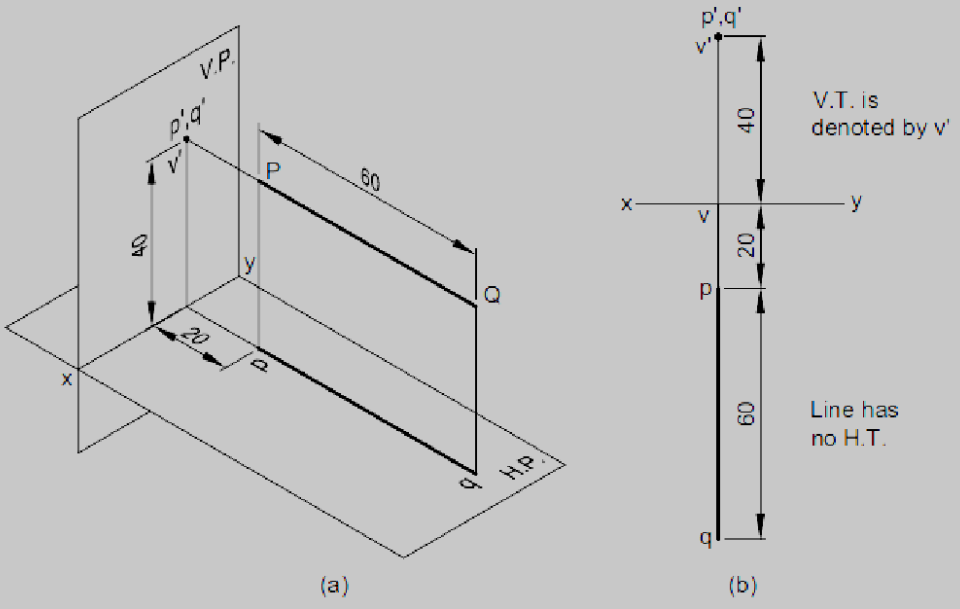

LINE INCLINED TO H.P. AND PARALLEL TO V.P.

Problem 9.4 *A 80 mm long line PQ has end P 20 mm above H.P. and 40 mm in front of the V.P. The line is inclined at 30° to the H.P. and is parallel to the V.P. Draw the projections of the line and determine its traces.*

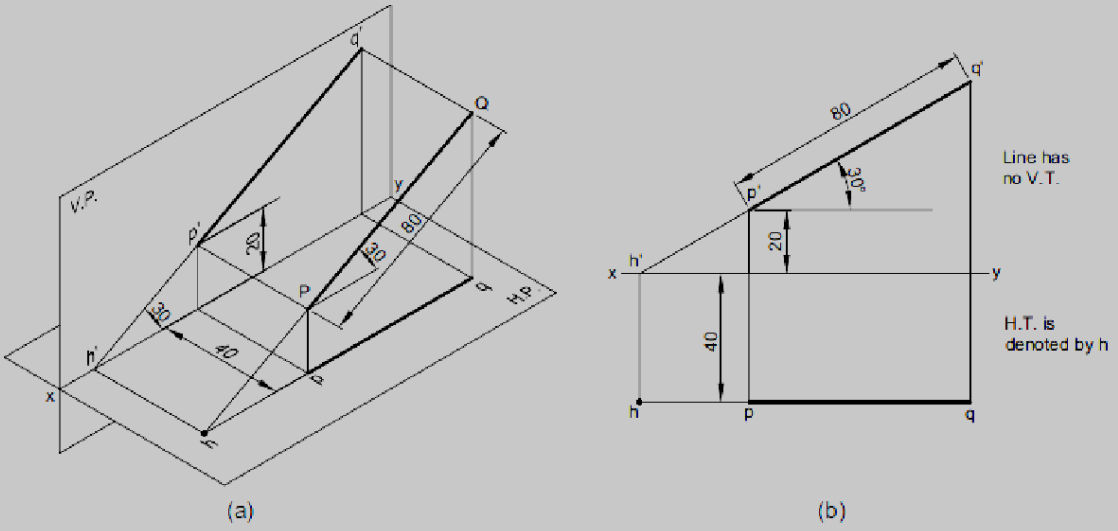

LINE INCLINED TO V.P. AND PARALLEL TO H.P.

Problem 9.5 *An 80 mm long line PQ is inclined at 30° to the V.P. and is parallel to the H.P. The end P of the line is 20 mm above the H.P. and 40 mm in front of the V.P. Draw the projections of the line and determine its traces.*

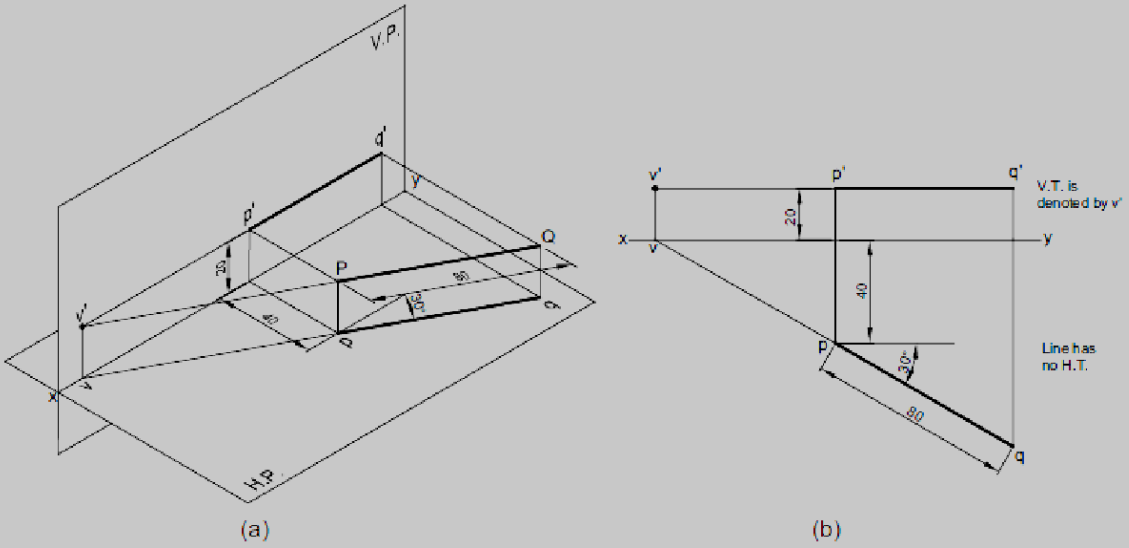

L INE SITUATED ON H.P.

Problem 9.6 *A 60 mm long line PQ lying on the H.P. is inclined at 30° to the V.P. Its end P is 20 mm in front of the V.P. Draw the projections of the line and determine its traces.*

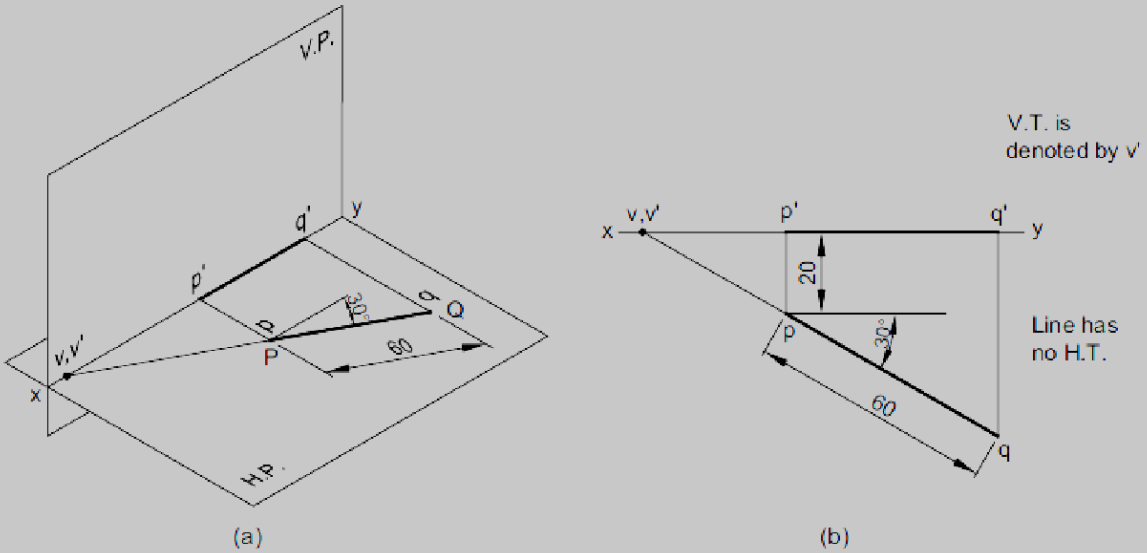

LINE SITUATED IN THE V.P.

Problem 9.7 *Draw the projections of a 70 mm long line PQ, situated in the V.P. and inclined at 30° to the H.P. The end P of the line is 25 mm above the H.P. Also, determine the traces of the line.*

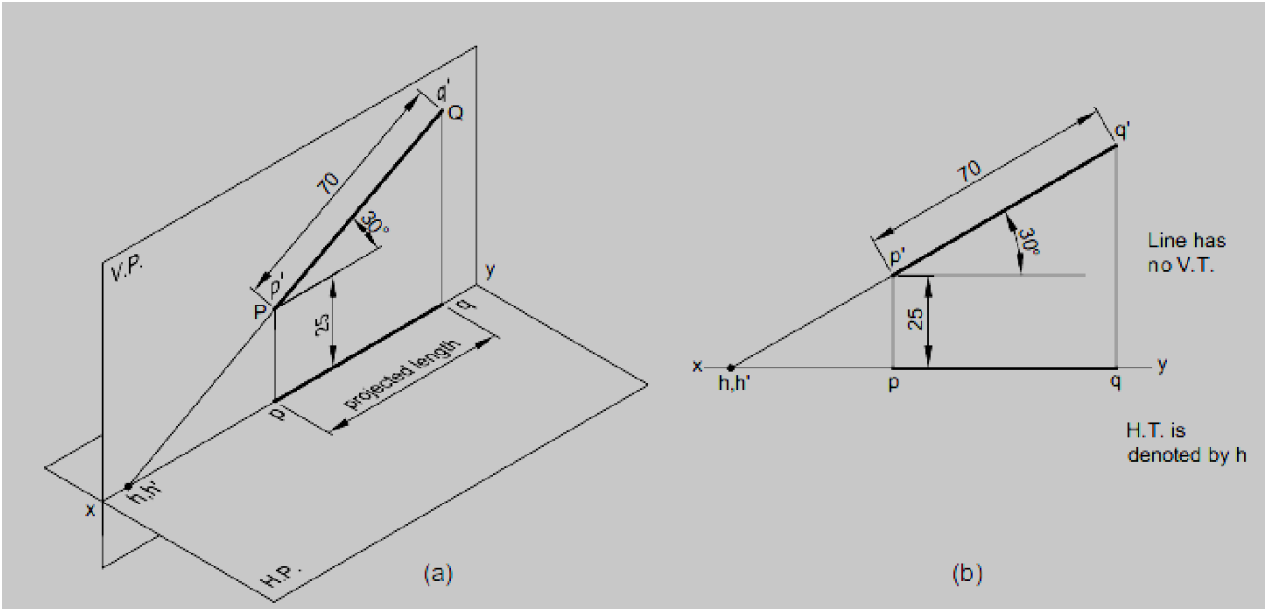

LINE SITUATED BOTH IN H.P. AND V.P.

Problem 9.8 *Draw the projections of a 60 mm long line PQ, which is situated both on the H.P. and the V.P. Also, determine the traces of the line.*

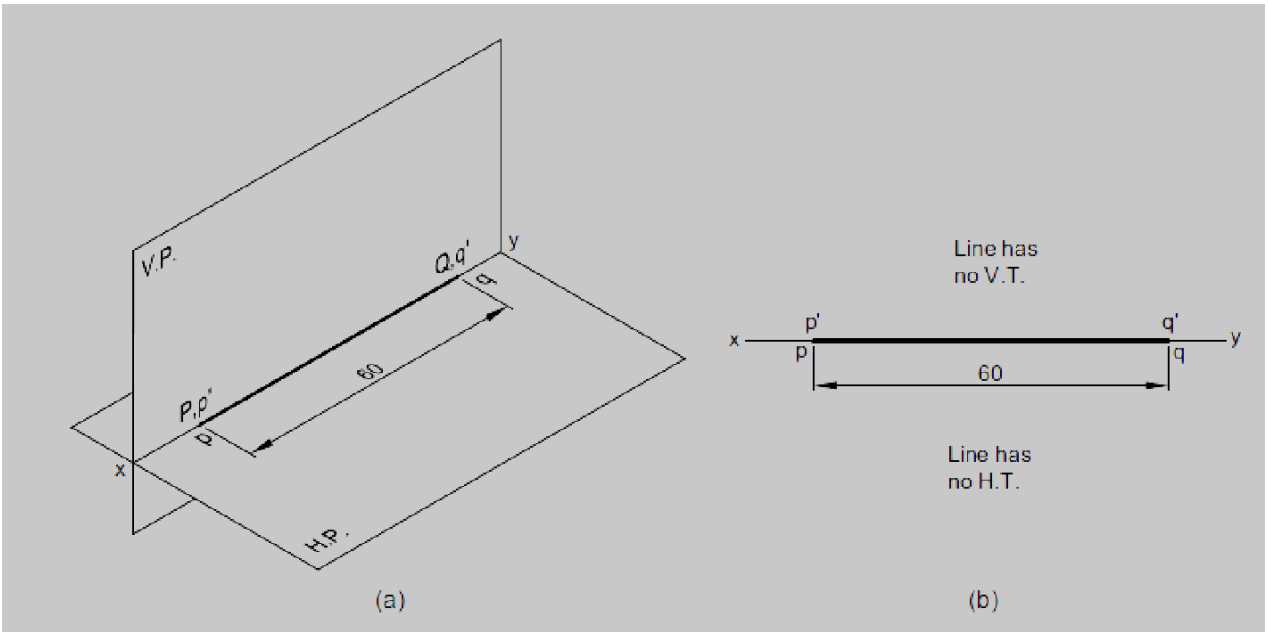

LINE IN FIRST ANGLE AND INCLINED TO BOTH THE REFERENCE PLANES

Problem 9.15 *A 70 mm long line PQ, has its end P 20 mm above the H.P. and 30 mm in front of the V.P. The line is inclined at 45° to the H.P. and 30° to the V.P. Draw its projections.*

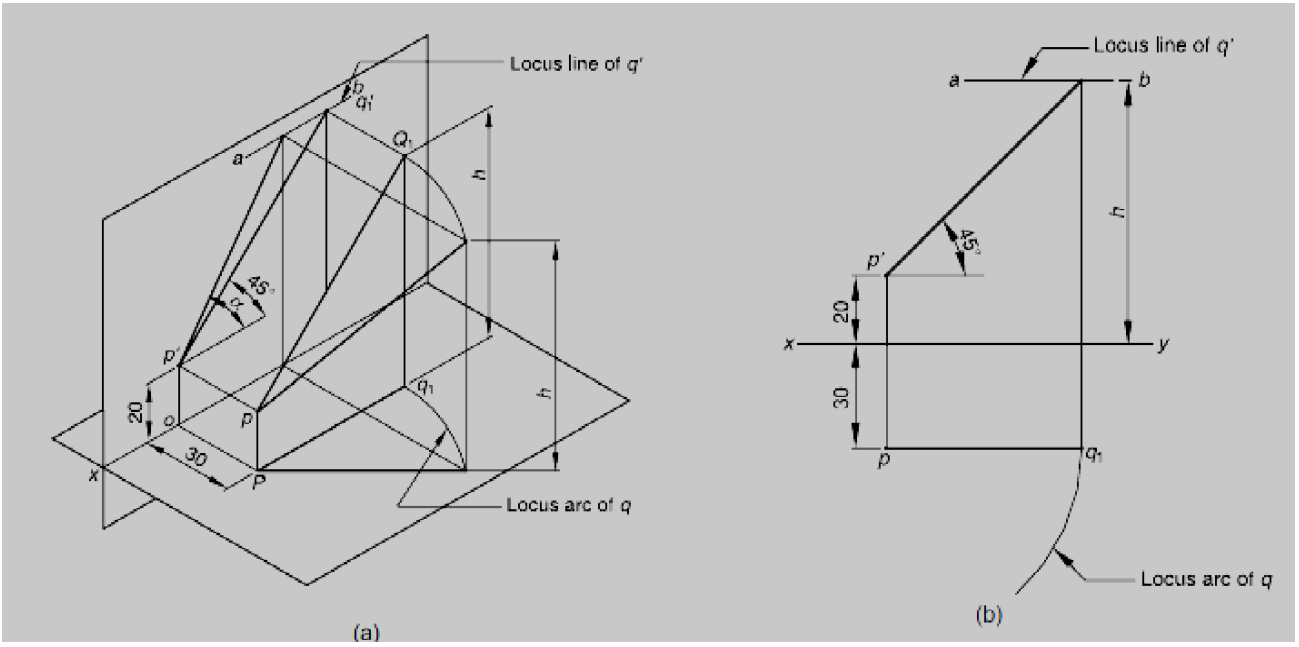

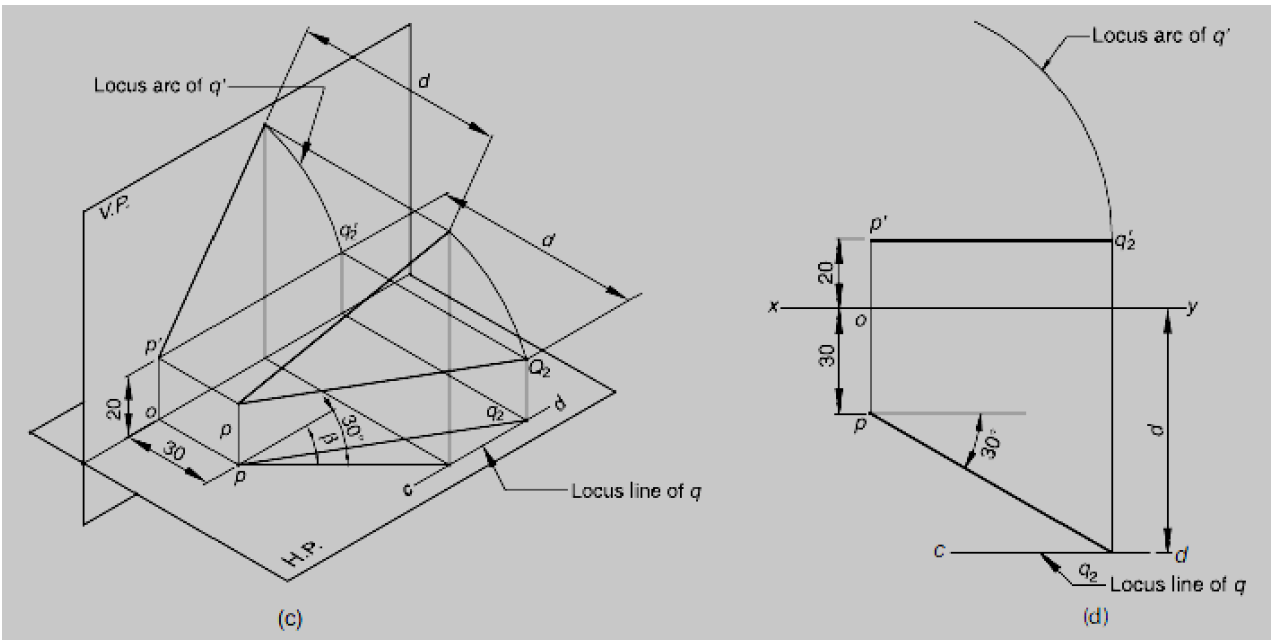

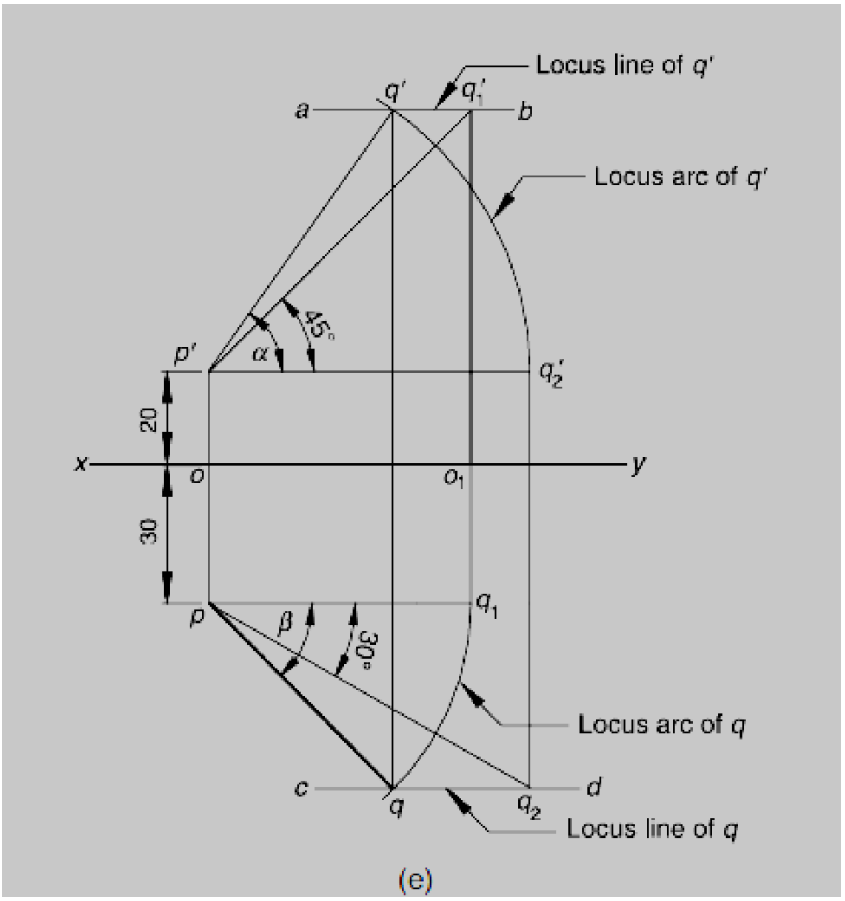

Problem 9.16 *A straight line PQ has its end P 20 mm above the H.P. and 30 mm in front of the V.P. and the end Q is 80 mm above the H.P. and 70 mm in front of the V.P. If the end projectors are 60 mm apart, draw the projections of the line. Determine its true length and true inclinations with the reference planes.*

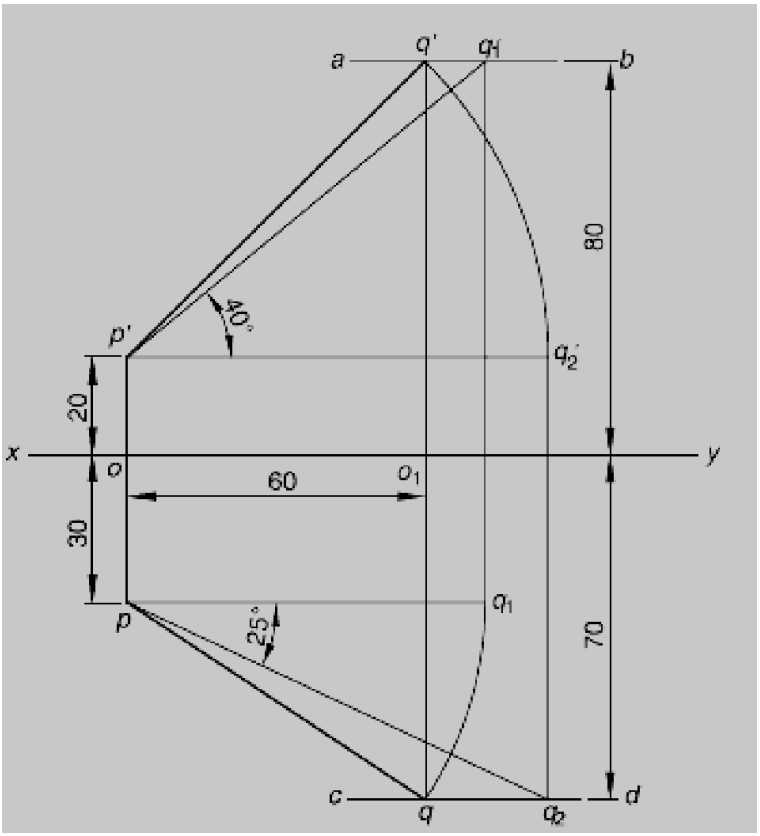

Problem 9.54 *A 120 mm long line PQ has the end projectors 50 mm apart. Ends P and Q are 10 mm and 60 mm below the H.P., respectively. The mid-point of PQ lies in the V.P. Draw the projections of the line and find its true inclinations with both reference planes. Assume that the end P lies in the fourth quadrant.*

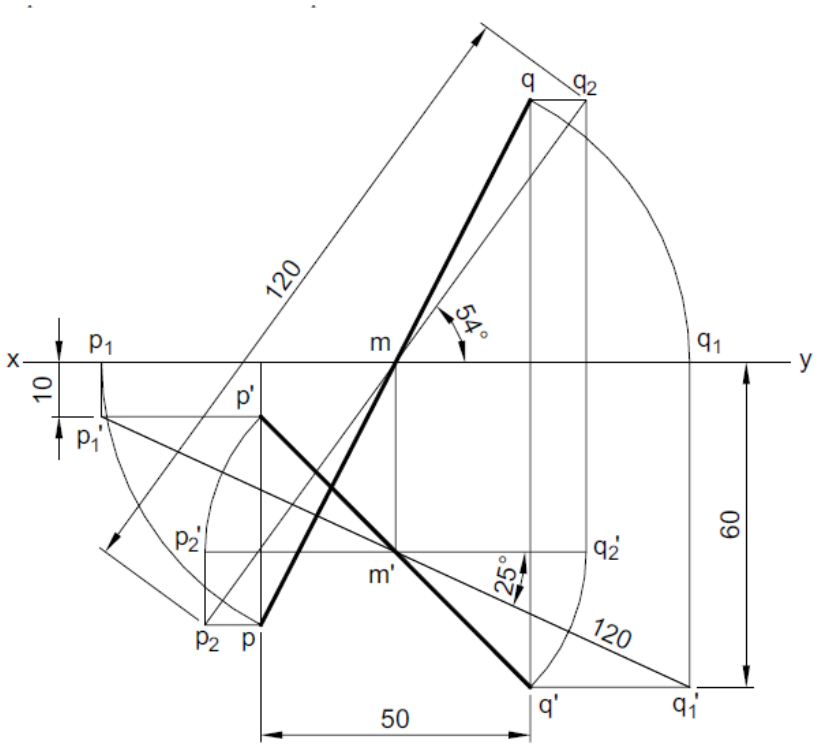

Problem 9.17 *A straight line PQ has its end P 20 mm above the H.P. and 30 mm in front of the V.P. and the end Q is 80 mm above the H.P. and 70 mm in front of the V.P. If the end projectors are 60 mm apart, draw the projections of the line. Determine its true length and true inclinations with the reference planes by trapezoid method.*

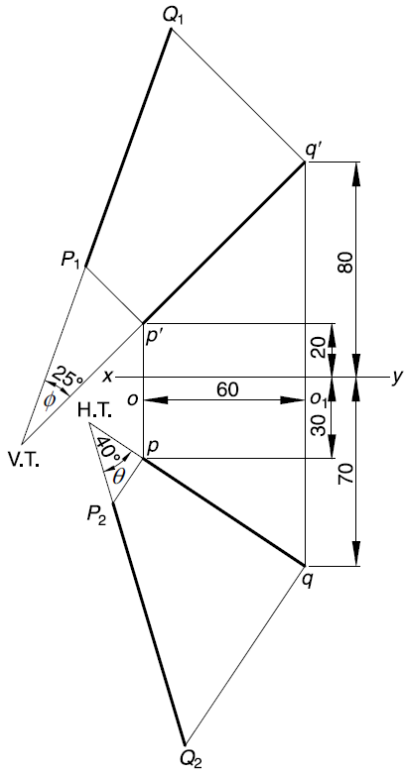

Module 2
Projection of Solids

This Module deals with the orthographic projections of three-dimensional objects called solids. However, only those solids are considered the shape of which can be defined geometrically and are regular in nature.

Classification of solids

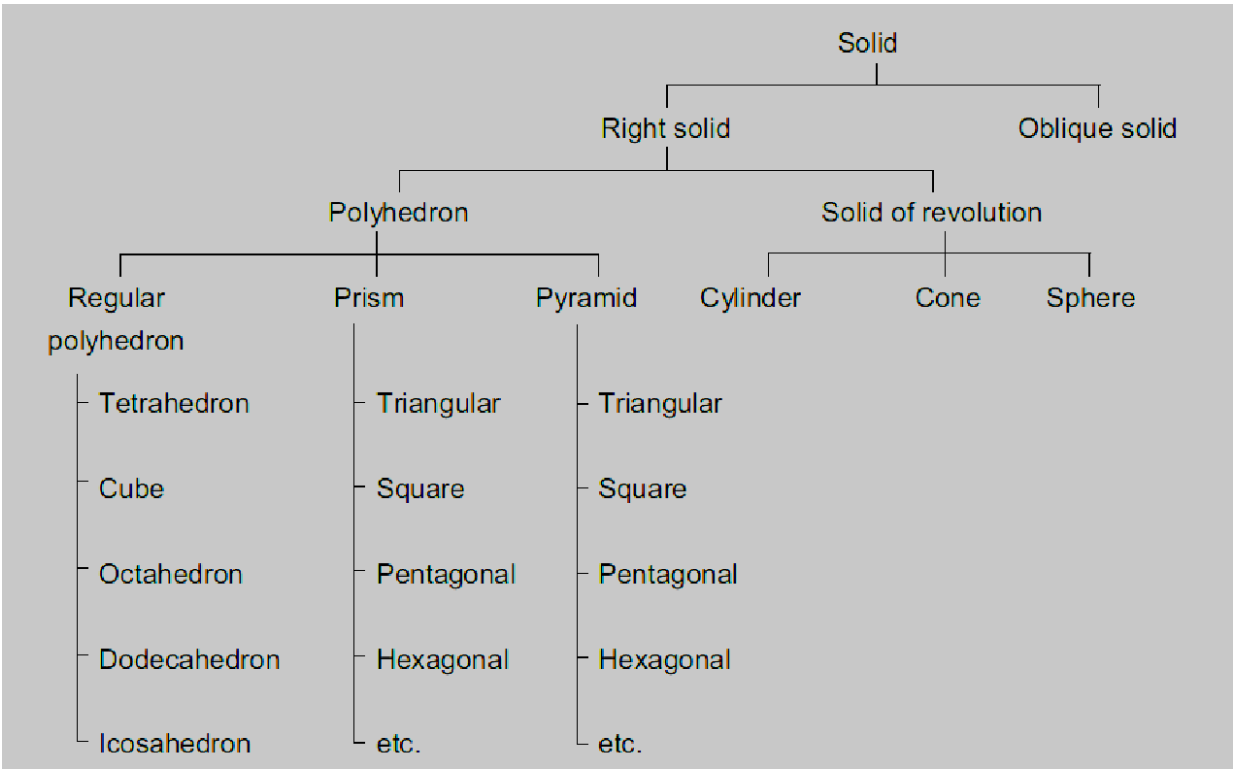

Polyhedron

A polyhedron is a solid bounded by planes called faces, which meet in straight lines called edges. A regular polyhedron has all the faces equal and regular as shown in Fig

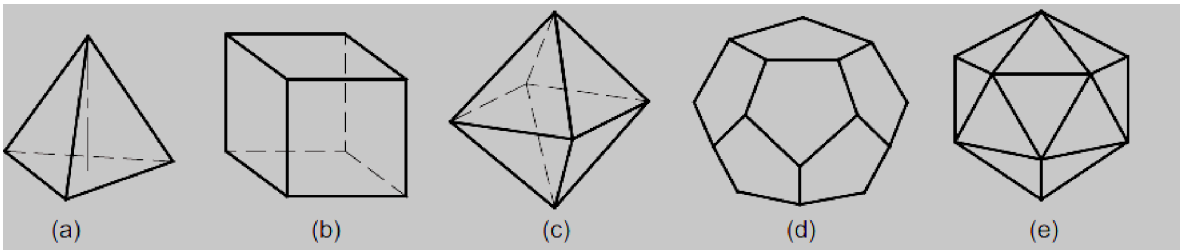

Regular polyhedron **(a)** *Tetrahedron* **(b)** *Cube* **(c)** *Octahedron* **(d)** *Dodecahedron* **(e)** *Icosahedron*

1. Tetrahedron It has four equal equilateral triangular faces.
2. Cube It has six equal square faces.
3. Octahedron It has eight equal equilateral triangular faces.
4. Dodecahedron It has 12 equal pentagonal faces.
5. Icosahedron It has 20 equal equilateral triangular faces.

Prism

A prism is a polyhedron with two n-sided polygonal bases which are parallel and congruent, and lateral faces are rectangles. All cross-sections parallel to the bases are congruent with the bases. An imaginary line that joins the centre of the bases is called an axis. A right and regular prism has regular polygonal bases, axis perpendicular to the bases and all the faces are equal rectangles, as shown in Fig. below. Prisms are named according to the shape of their base, so a prism with a triangular base is called a triangular prism; a square base is called a square prism and so on.

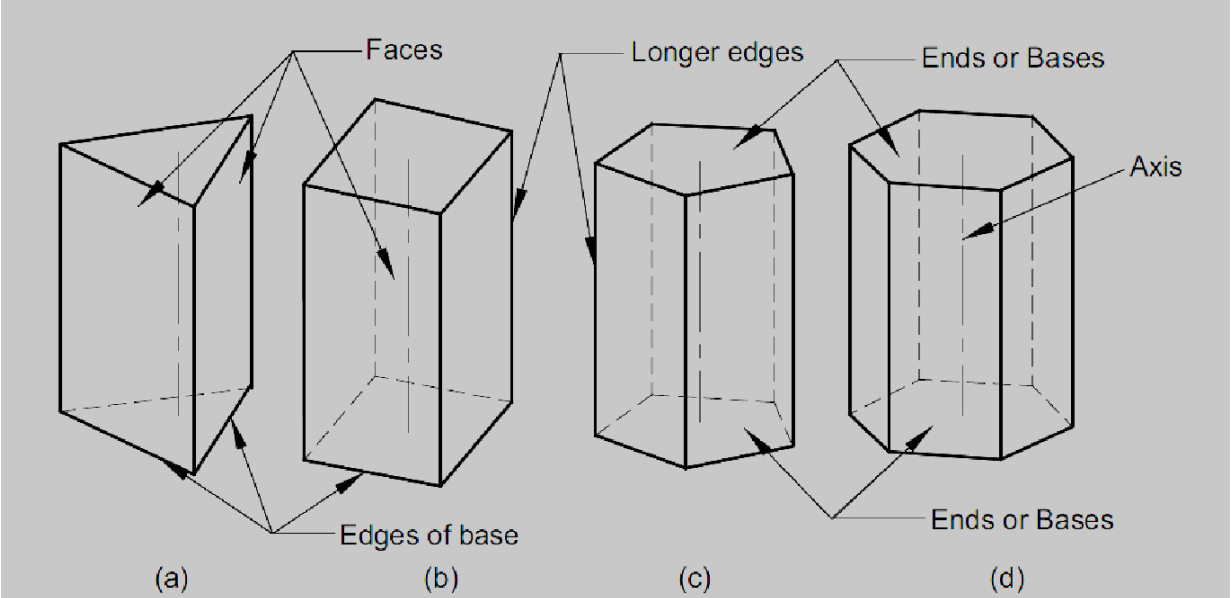

Prisms **(a)** *Triangular* **(b)** *Square* **(c)** *Pentagonal* **(d)** *Hexagonal*

Pyramid

A pyramid is a polyhedron with n-sided polygonal base and lateral faces are triangles meeting at a point
called the vertex or apex. An imaginary line that joins the apex with the centre of the base is known as the axis. A right and regular pyramid has a regular polygon base, axis perpendicular to the base and all the faces are equal isosceles triangles, as shown in Fig. 11.4. Pyramids are named according to the shape of their base, so a pyramid with a triangular base is called a triangular pyramid; a square base is called a square pyramid and so on. The centre of gravity of pyramids lies on the axis at one-fourth of its height from the base.

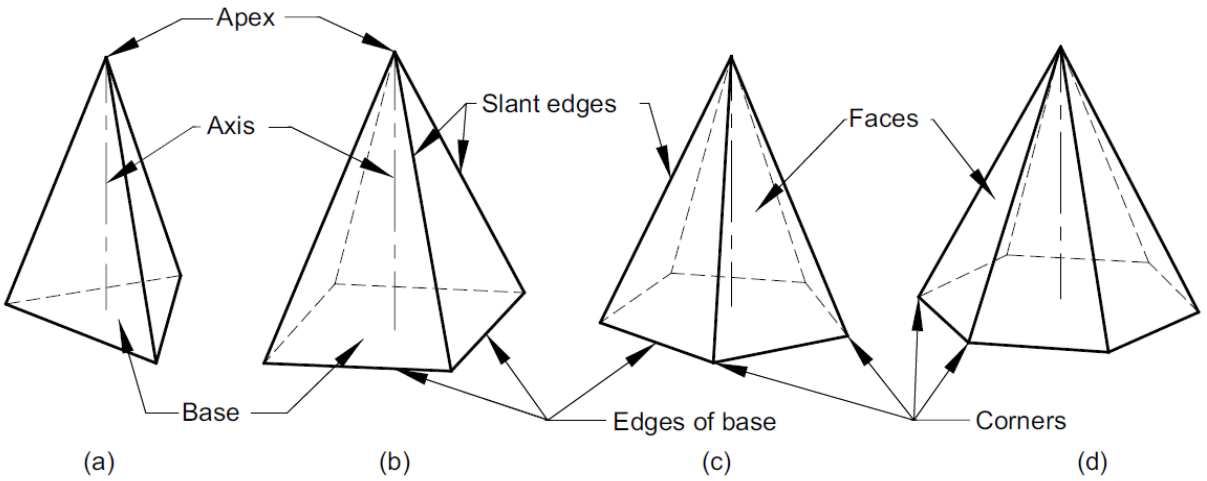

Pyramids **(a)** *Triangular* **(b)** *Square* **(c)** *Pentagonal* **(d)** *Hexagonal*

Solid of Revolution

These solids are obtained by revolving a plane figure like rectangle, triangle or a semi-circle about a fixed line.

1. **Cylinder:** A cylinder is a solid of revolution obtained by revolving a rectangle about one of its fixed side called an axis. It can be imagined as a prism of infinite number of lateral faces. Any line on the surface of a cylinder is called its generator. Thus, a cylinder has an infinite number of generators. A right cylinderhas all the generators and the axis perpendicular to the base, as shown in Fig.(a).
2. **Cone:** A cone is obtained by revolving a triangle about its fixed side called an axis. A cone can be imagined as a pyramid with infinite number of lateral faces. Any line on the surface of a cone is called its generator. Thus, a cone has an infinite number of generators. A right cone has all generators of equal length and the axis perpendicular to the base, as shown in Fig.(b).
3. **Sphere:** A sphere is obtained by revolving a semi-circle around its diameter, as shown in Fig.(c).

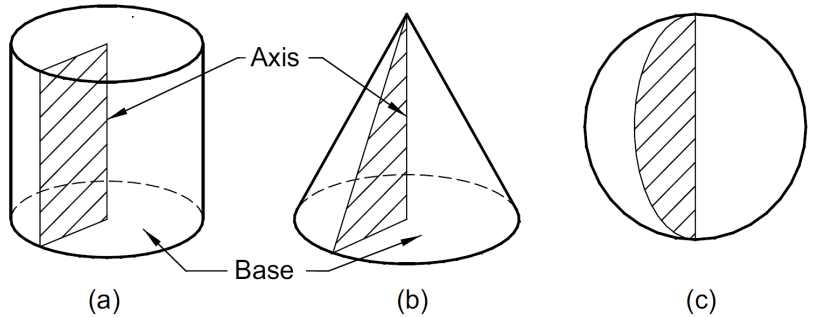

Solids of revolution **(a)** *Cylinder* **(b)** *Cone* **(c)** *Sphere*

Oblique Solid

An oblique solid such as oblique prism, pyramid, cylinder or cone has its axis inclined to its base as shown in Fig. below. The faces of an oblique prism are parallelograms of different sizes. The faces of an oblique pyramid are triangles of different sizes. The generators in an oblique cylinder have equal lengths whereas those in an oblique cone have unequal lengths.

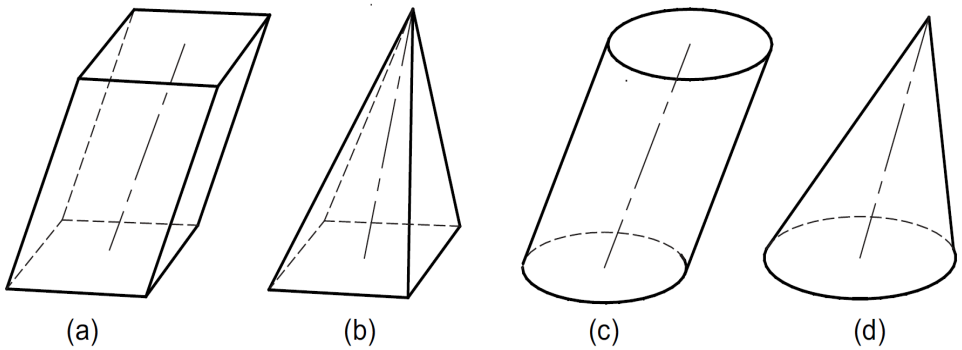

Oblique solids **(a)** *Square prism* **(b)** *Square pyramid* **(c)** *Cylinder* **(d)** *Cone*

Frustum of Pyramid and Cone

When a regular pyramid or a cone is cut by a plane parallel to its base and the portion of the solid containing apex is removed, the remaining portion of the solid is called the frustum of that pyramid or cone, as shown in Fig below

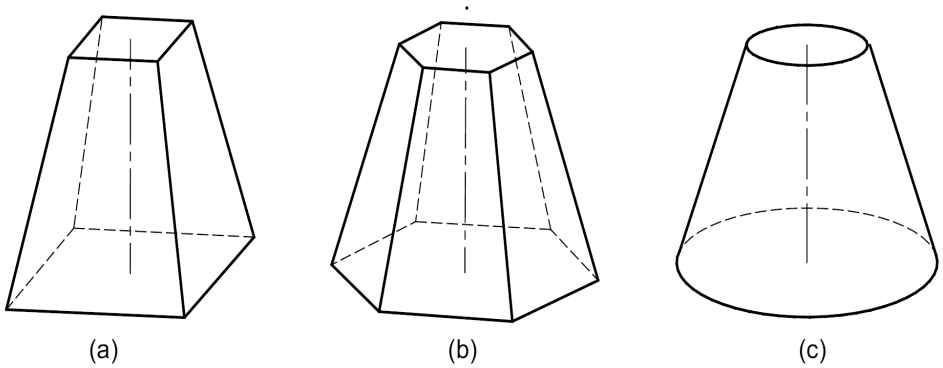

Frustums of **(a)** *Square pyramid* **(b)** *Hexagonal pyramid* **(c)** *Cone*

Recommended method of labelling

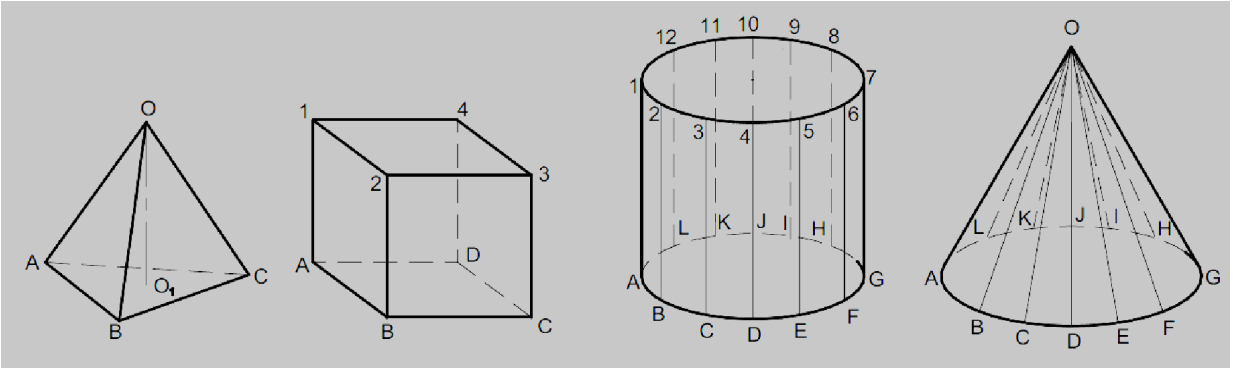

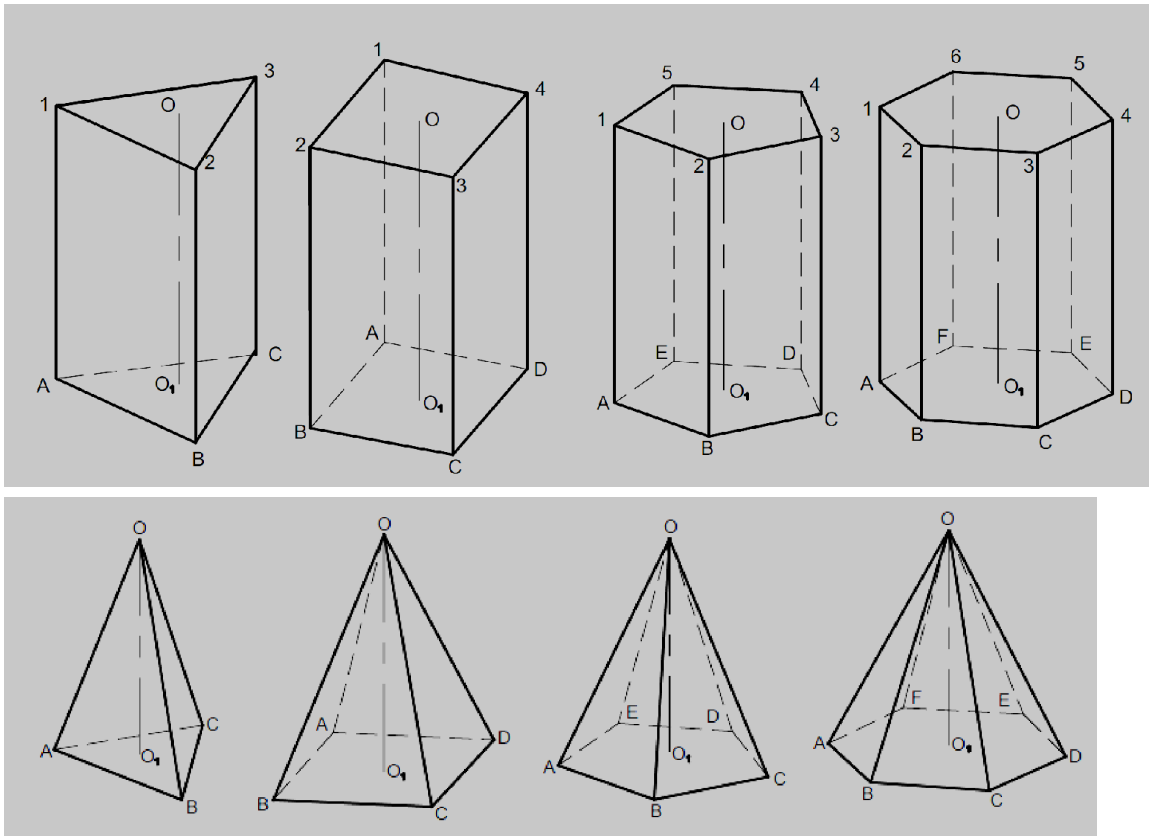

Construction of a Regular Hexagon

Methods explained in problem 3.20 can be used to draw a regular hexagon. However much convenient method for construction of hexagon is illustrated in following problem.

Example:

Draw a regular hexagon of 40 mm sides, keeping a side (a) vertical (b) horizontal.

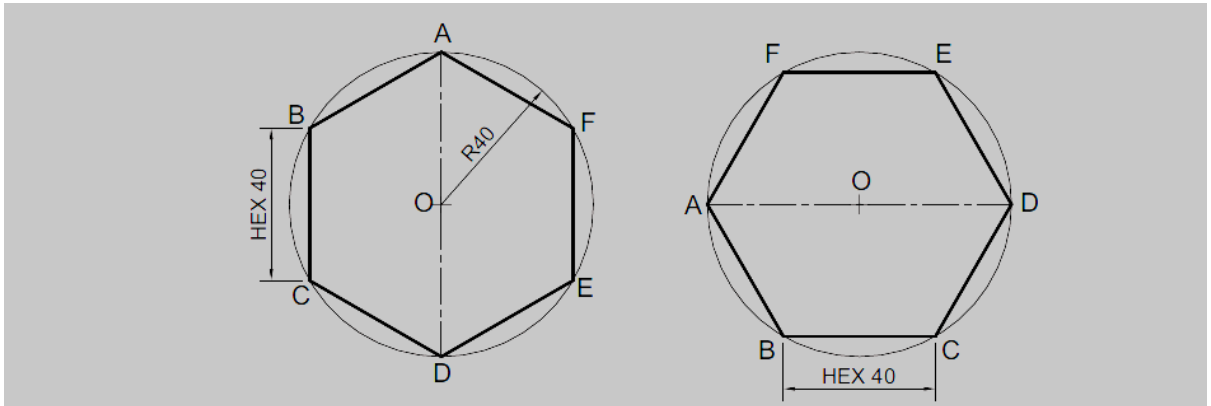

Fig. 3.22 *Hexagon with a side* **(a)** *Vertical* **(b)** *Horizontal*

Construction Refer to Figs. 3.22(a) and (b).

1. Draw a circle with centre *O* and radius 40 mm.
2. Mark a diameter *AD* in vertical position for case (a) and in horizontal position for case (b).
3. With radius *OA* and centres *A* and *D*, draw arcs to cut the circle at points *B*, *F*, *C* and *E*.
4. Join *ABCDEF* to get the required hexagon.

Construction of a regular pentagon

Example

1. Draw a 40 mm long line AB.
2. Draw 40 mm long lines AE and BC, both inclined at 108° with line AB.
3. With centres C and E and radius AB, draw arcs to intersect each other at point D.
4. Join $ABCDE$ to obtain the required pentagon.

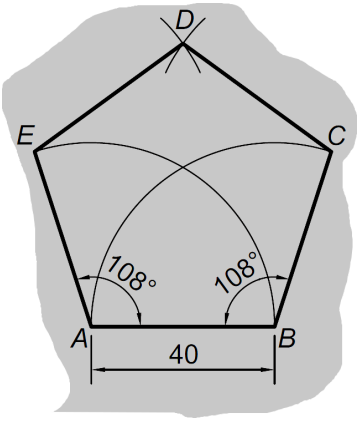

Orientation of solid

The solid may be in one of the following positions:

1. Axis perpendicular to the H.P.
2. Axis perpendicular to the V.P.
3. Axis parallel to both the H.P. and the V.P. (i.e., perpendicular to the profile plane)
4. Axis inclined to the H.P. and parallel to the V.P.
5. Axis inclined to the V.P. and parallel to the H.P.
6. Axis inclined to both the H.P. and the V.P

AXIS PERPENDICULAR TO H.P.

Problem 11.1 *A square pyramid of base side 40 mm and axis 60 mm is resting on its base on the H.P. Draw its projections when (a) a side of the base is parallel to the V.P., (b) a side of the base is inclined at 30° to the V.P., (c) all the sides of the base are equally inclined to the V.P.*

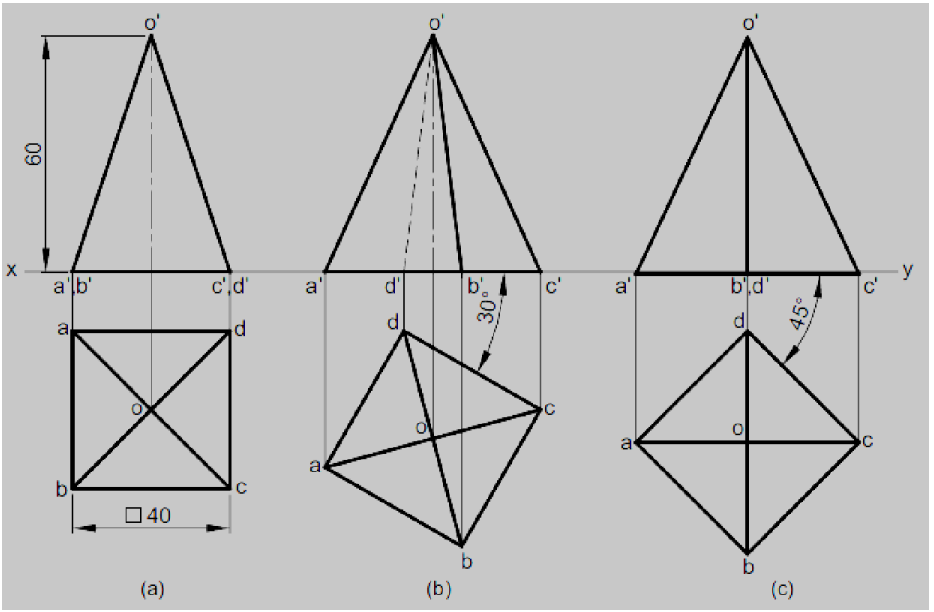

AXIS PERPENDICULAR TO V.P.

Problem 11.3 *A pentagonal prism of base side 30 mm and axis 60 mm has one of its bases in the V.P. Draw its projections when (a) a rectangular face is parallel to and 15 mm above the H.P., (b) a face is perpendicular to the H.P., (c) a face is inclined at 45° to the H.P.*

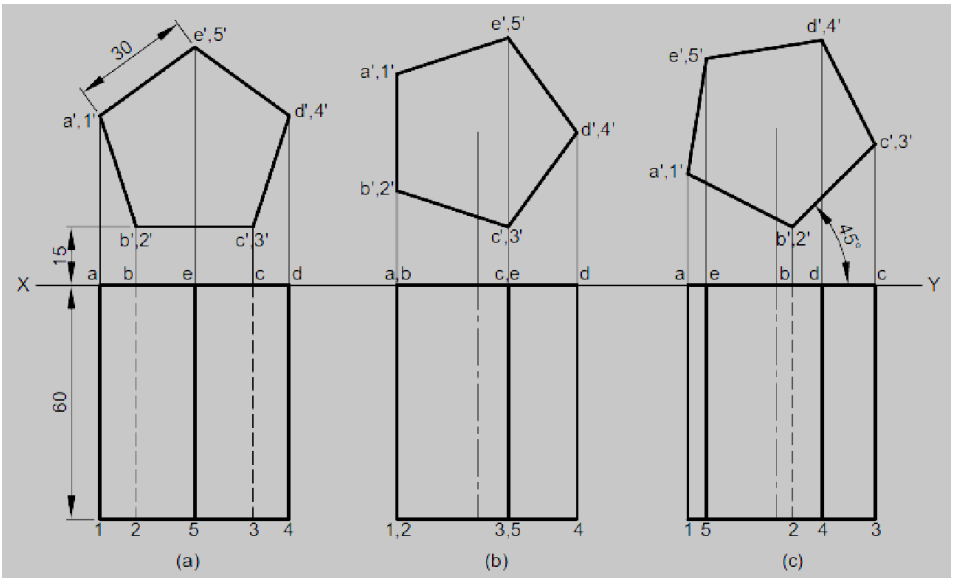

AXIS PARALLEL TO BOTH H.P. AND V.P

Problem 11.4 *A pentagonal prism of base side 30 mm and axis 60 mm is resting on one of its rectangular faces on the H.P. with axis parallel to the V.P. Draw its projections.*

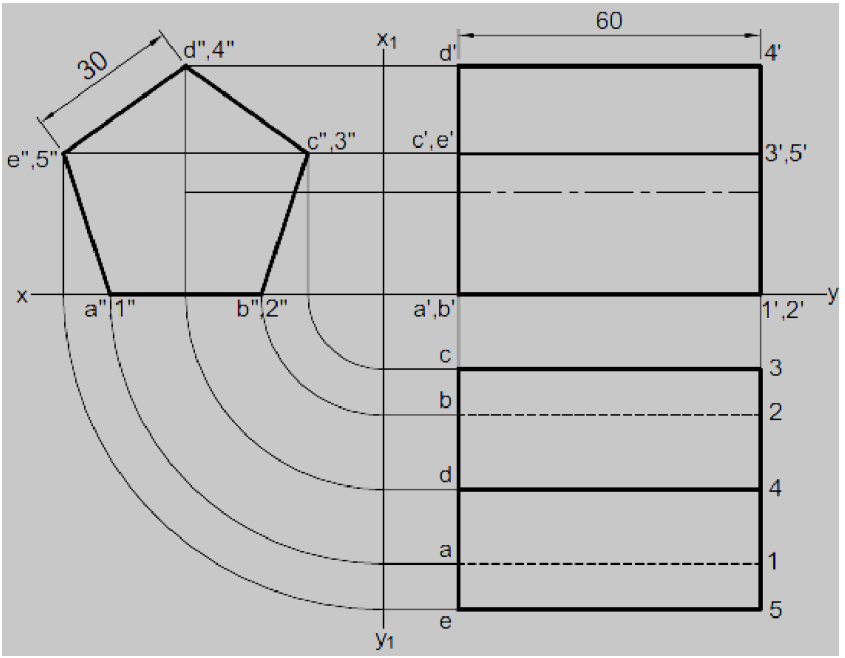

AXIS INCLINED TO H.P. AND PARALLEL TO V.P.

Problem 11.9 *A pentagonal prism of base edge 30 mm and axis 60 mm rests on an edge of its base in the H.P. Its axis is parallel to V.P. and inclined at 45° to the H.P. Draw its projections.*

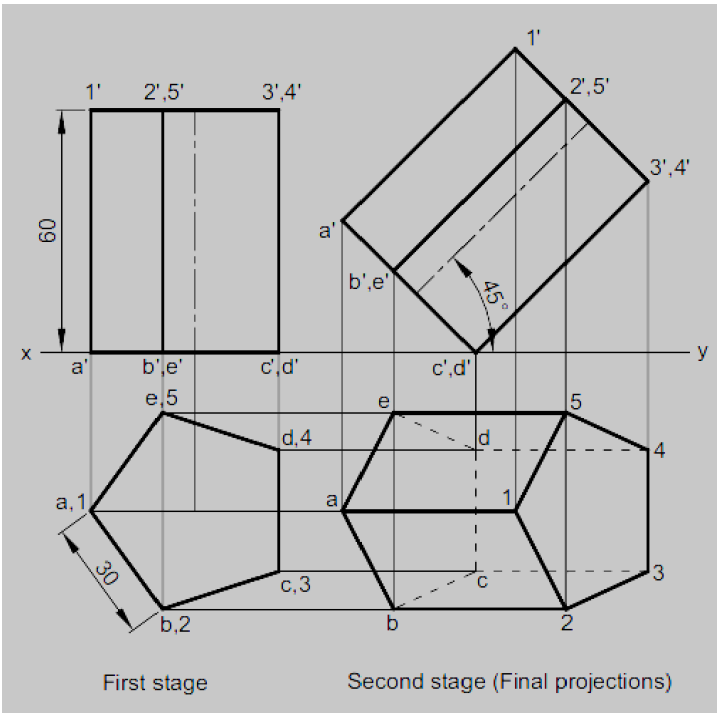

AXIS INCLINED TO V.P. AND PARALLEL TO H.P.

Problem 11.19 *A hexagonal prism of base edge 30 mm and axis 70 mm has an edge of its base in the V.P. such that the axis is inclined at 30° to the V.P. and parallel to the H.P. Draw its projections.*

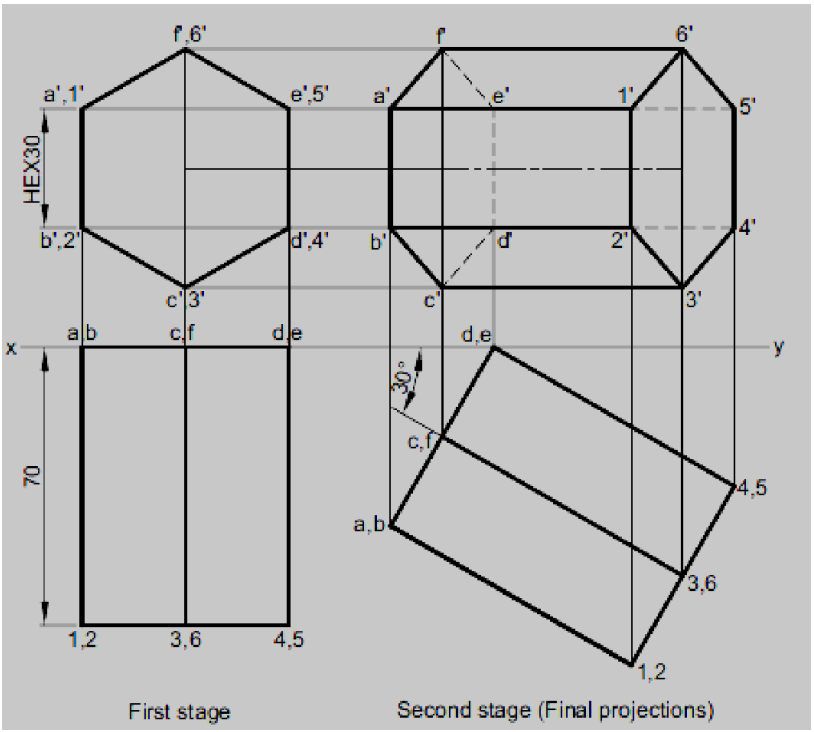

AXIS INCLINED TO BOTH H.P. AND V.P.

Problem 11.26 *A square prism of base edge 35 mm and axis 60 mm is resting on an edge of its base on the H.P. and the axis inclined at 45° to the H.P. If the edge resting on the H.P. is inclined at 30° to the V.P., draw its projections.*

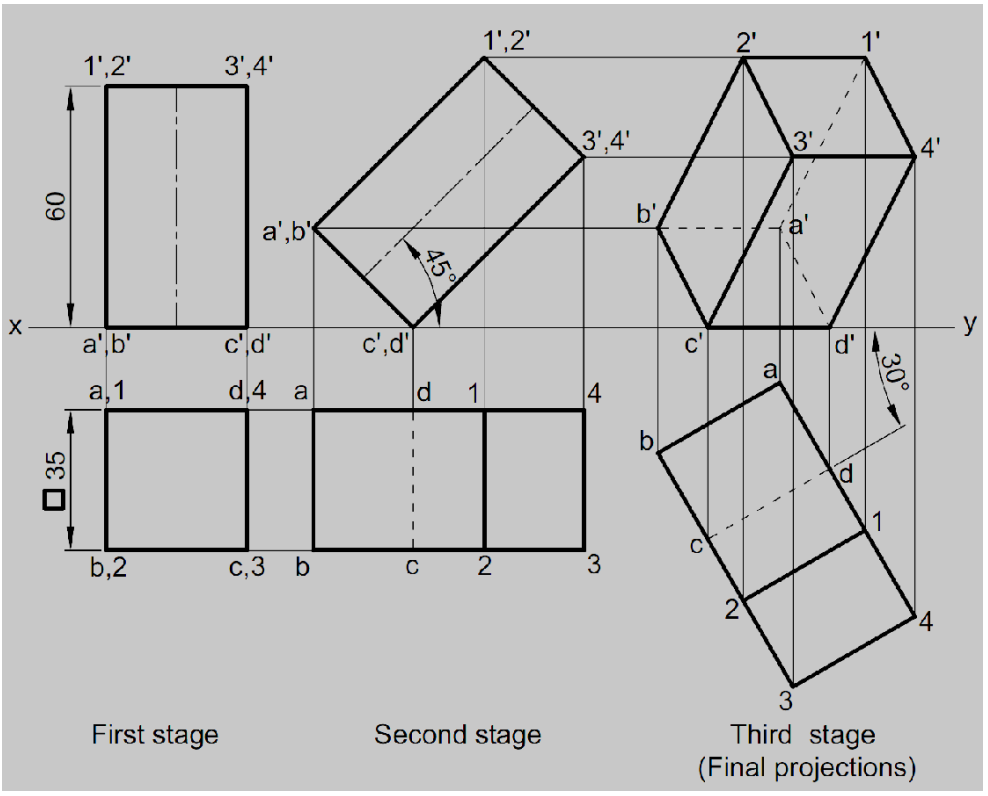

Problem 11.31 *A hexagonal pyramid of base side 30 mm and axis 60 mm has one of its slant edges on the H.P. and inclined at 45° to the V.P. Draw its projections when the base is visible.*

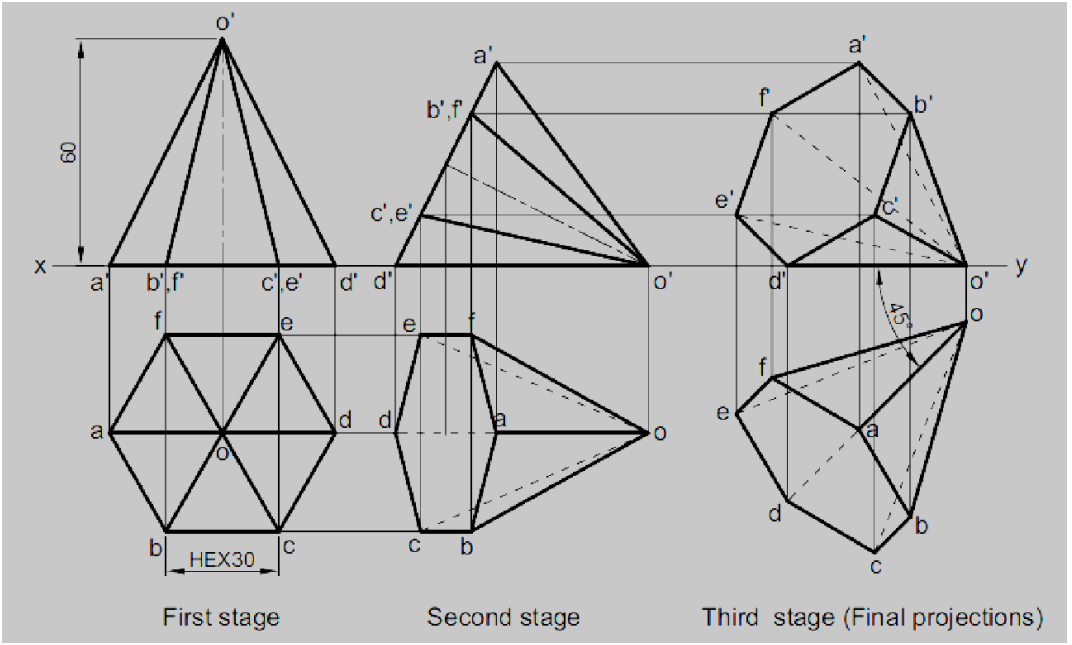

Problem 11.36 *A cylinder of base diameter 50 mm and axis 65 mm rests on a point of its base circle on the H.P. Draw its projections when the axis is inclined at 30° to the H.P. and top view of the axis is perpendicular to the V.P.*

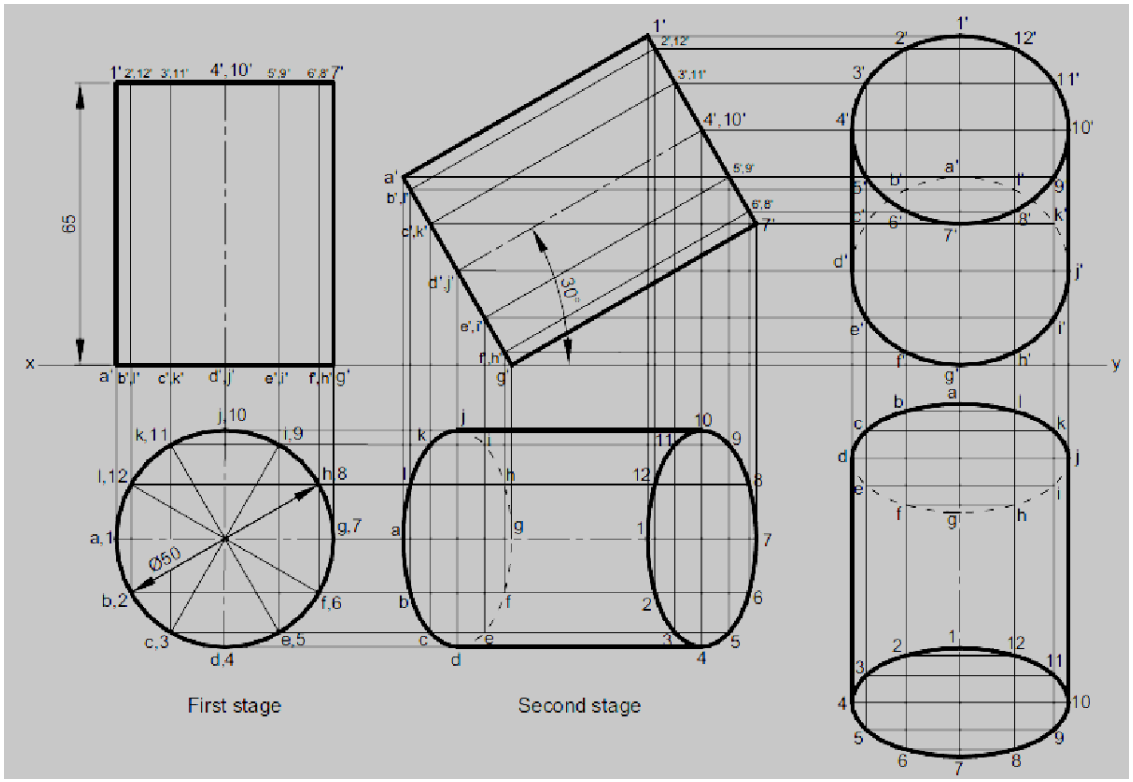

Problem 11.35 *A pentagonal pyramid of base side 30 mm and axis 60 mm is held on a corner of its base on the ground and the triangular face opposite to it is horizontal. Draw the projections of the pyramid when the edge of the base contained by this triangular face is inclined at 60° to the V.P. and the apex is towards the observer.*

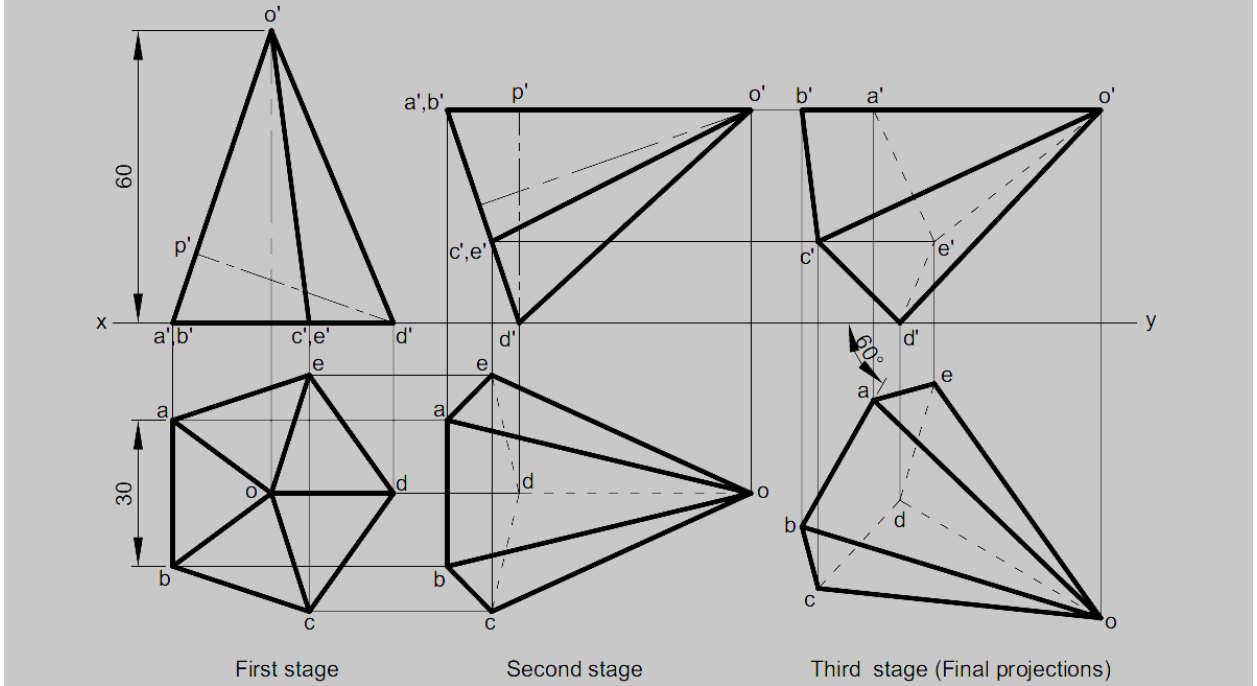

Problem 11.39 *A cone of base diameter 50 mm and axis 60 mm is freely suspended from the mid-point of a generator. Draw its projections when the top view of that generator is inclined at 45° to the reference line and apex is nearer to the observer.*

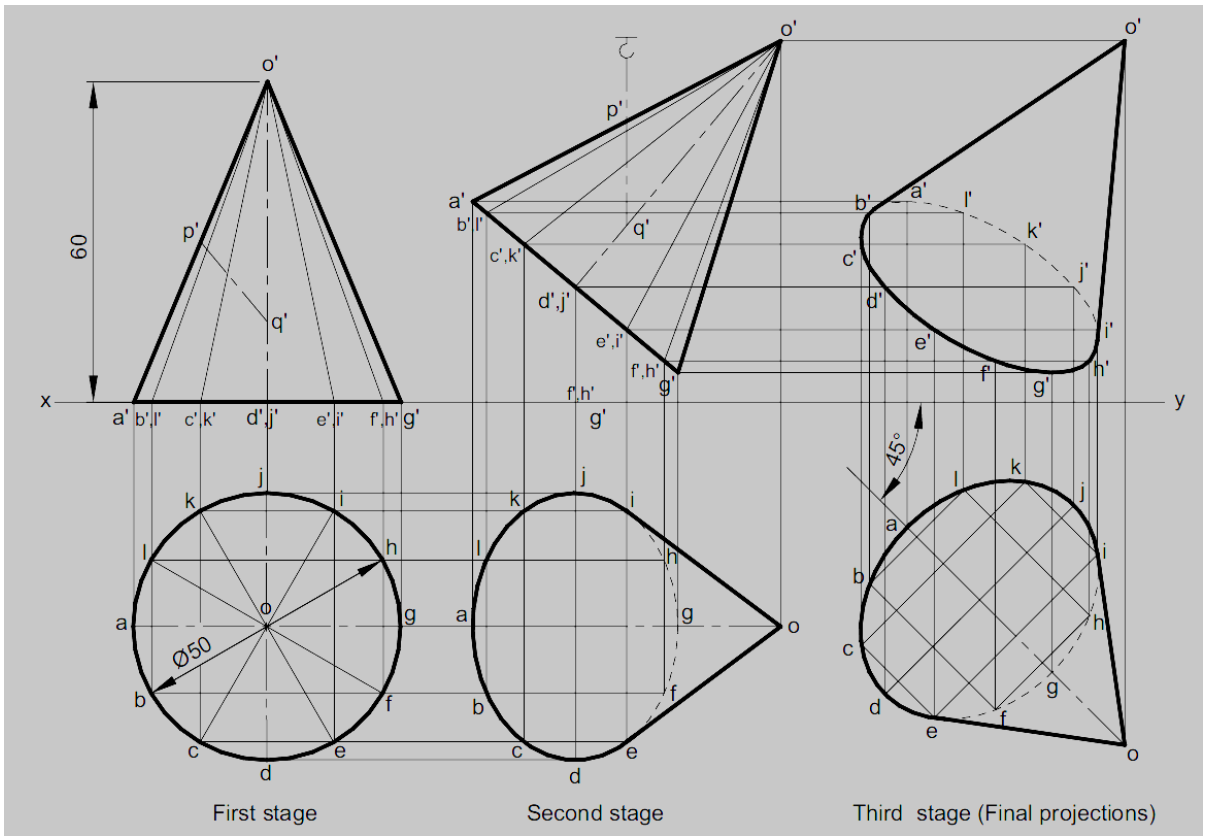

Problem 11.46 *A cone of base diameter 50 mm and axis 60 mm has one of its generators in the V.P. and inclined at 30° to the H.P. Draw its projections when the apex is 15 mm above the H.P.*

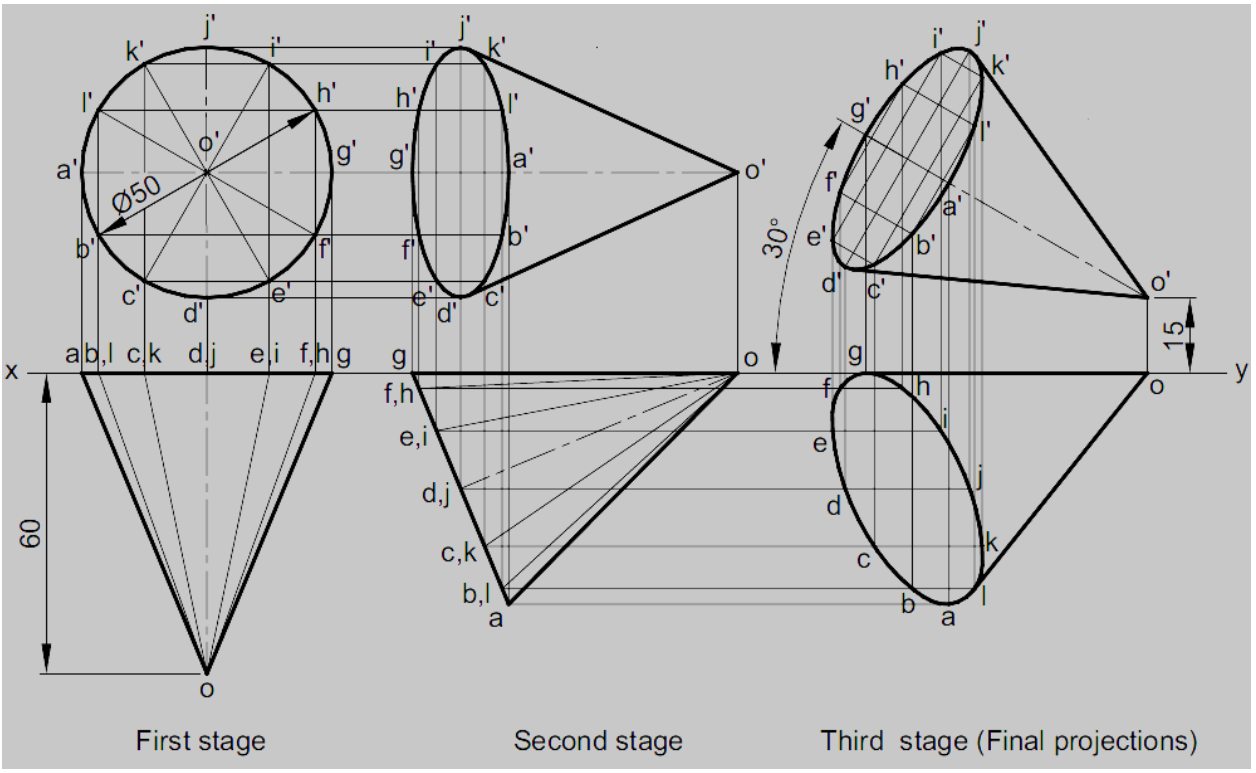

Condition of Apparent Angle

Problem 11.47 *A hexagonal prism of base edge 30 mm and axis 60 mm rests on one of its base edges on the H.P. such that the axis is inclined at 30° to H.P. and 45° to the V.P. Draw its projections.*

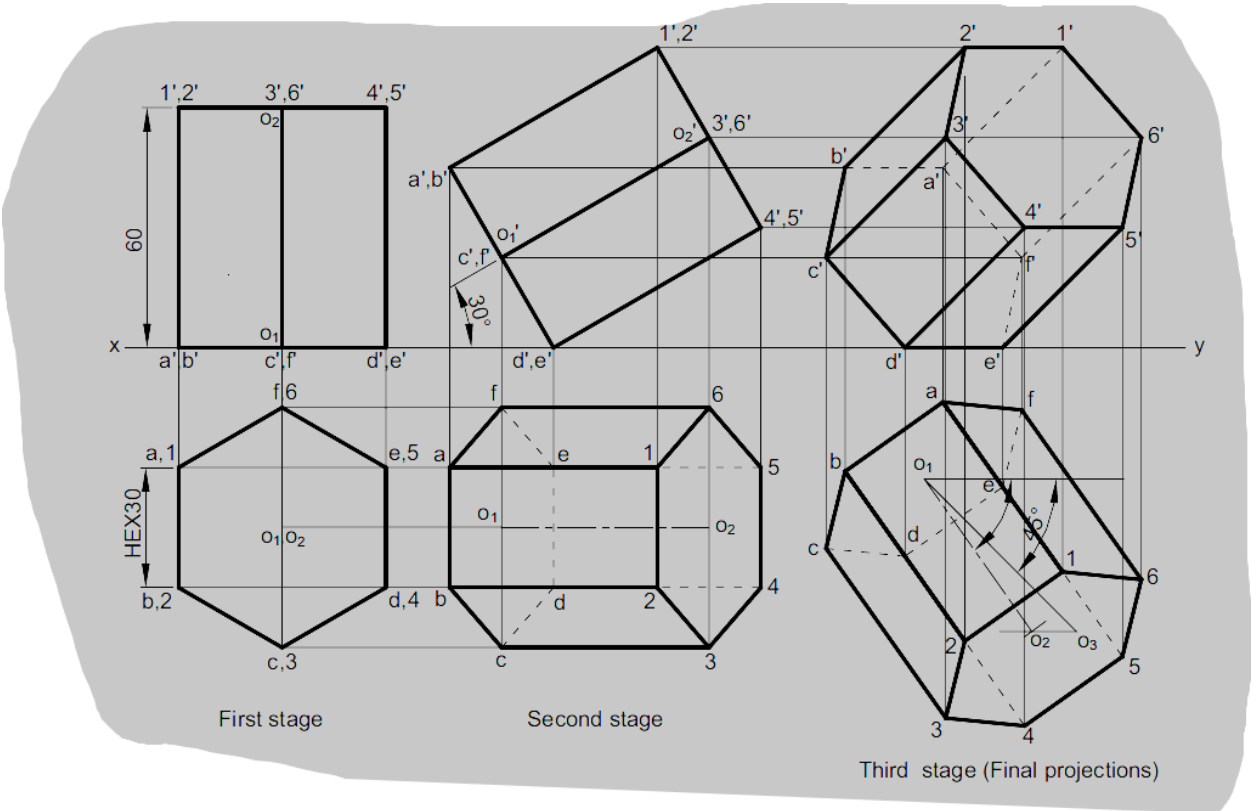

Problem 11.48 *Draw the projections of a cone of base diameter 50 mm and axis 60 mm resting on a point of the base circle on the ground with axis inclined at 30° to the H.P. and (a) 45° to the V.P., and (b) the top view of the axis inclined at 45° to the V.P.*

Construction Refer to Fig. 11.56.

1. **First stage** Draw circle *adgj* and divide into 12 equal parts to represent the top view and project it to obtain $a'g'o'$ as the front view.
2. **Second stage** Reproduce the front view of first stage keeping g' on xy and $g'a'$ inclined at 60° to xy. Obtain a, b, c, etc., in the top view as the intersecting points of the projectors from the front view of the second stage with the corresponding locus lines from the top view of the first stage. Join the points and obtain *adoj* as the top view.

Case (a): The axis is inclined at 45° with the V.P.

3. **Third stage** Determine the apparent angle β. For this, draw a line o_1o_2, 60 mm long (true length of the axis) inclined at 45° to xy. Draw an arc with o_1 as the centre and radius equal to the top view

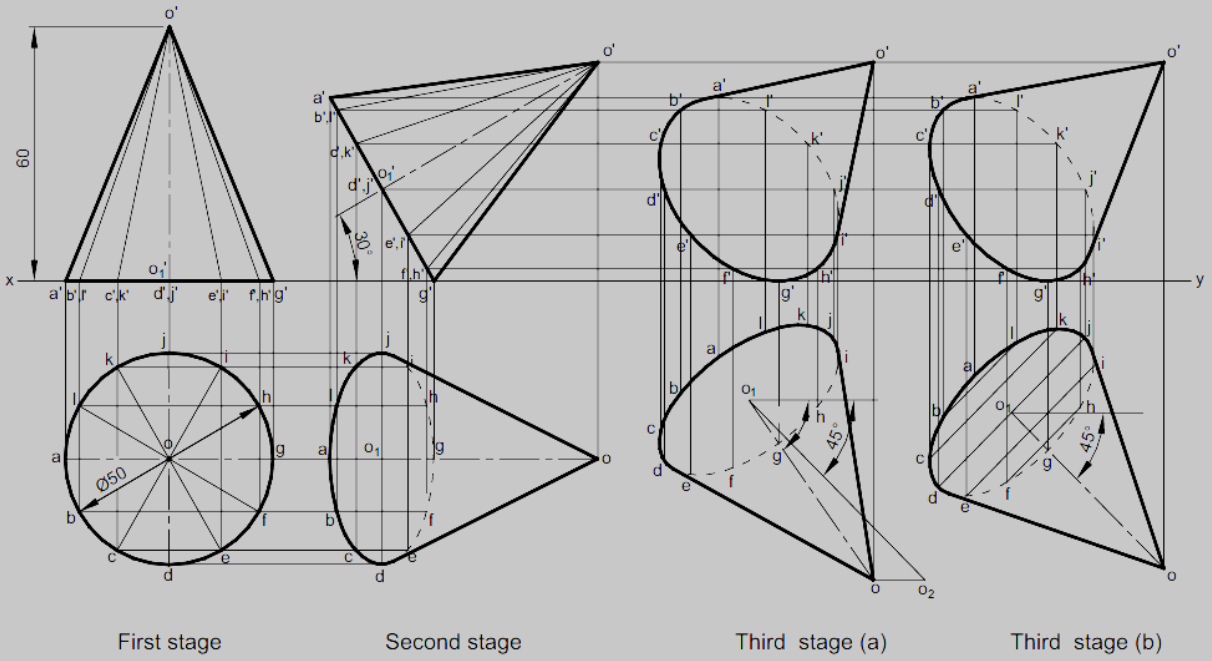

Fig. 11.56

of the axis (o_1o in the second stage) to meet horizontal line from o_2 at point o. Reproduce the top view of the second stage keeping oo_1 at β angle to xy. Obtain a', b', c', etc., in the front view as the intersecting points of the projectors from the top view of the third stage with the corresponding locus lines from the front view of the second stage. Join the points and obtain the required front view.

Case (b): The top view of the axis is inclined at 45° with the V.P.

4. **Fourth stage** Reproduce the top view of the second stage keeping oo_1 inclined at 45° to xy. Obtain a', b', c', etc., in the front view as the intersecting points of the projectors from the top view of the third stage with the corresponding locus lines from the front view of the second stage. Join the points and obtain the required front view.

Module 3: Part A
Sections of Solids

The orthographic views of a solid may contain a number of dotted lines. These lines indicate the presence of hidden details which may lie behind or somewhere in the middle of the object. The interpretation of the object's shape becomes difficult with increasing number of such lines. As a remedy, it becomes obligatory to draw sectional views for a better and easier interpretation of the internal features.

The object is considered to be cut by a plane called a section plane or a cutting plane. The portion of the object, which falls between the section plane and the observer, is assumed to be removed. Thus the internal details become visible. The projections of the remaining object are termed as sectional views. It is always convenient to start by drawing the orthographic views of the uncut object. Then these are modified into sectional views. The cut surface which is common to the object and the section plane is shaded with parallel lines called hatching to differentiate it from other surfaces. If the section plane is inclined to the plane of projection, the cut surface does not show its true shape. In such cases, it is generally required to determine the true shape of the cut surface popularly called the true shape of section

Terminology

The following terms are frequently used in this chapter:
1. **Section plane** It is an imaginary plane which cuts the given object to show the internal details. This plane is represented by its trace.
2. **Cut surface** It is the surface created due to cutting the object by section plane. It is shown by hatching lines.
3. **Hatching lines** These are used to indicate the cut surface. These are represented by continuous lines drawn at 45º to the reference line, parallel to each other at a uniform spacing.
4. **Apparent section** It is the projection of cut surface when the section plane is not parallel to the plane of projection.
5. **True shape of section** The projection of the cut surface on a plane parallel to the section plane is known as true shape of section. It shows actual shape and size of the cut surface.

Types of section planes

1. **Section Plane Perpendicular to V.P.**
   a) **Horizontal section plane**

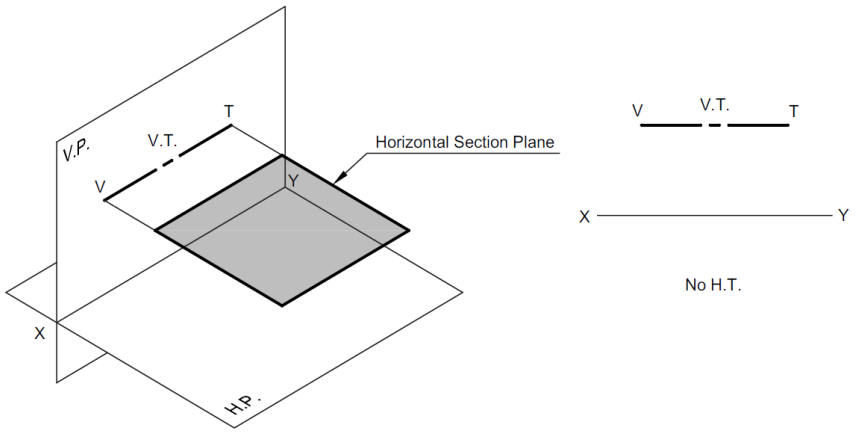

b) Auxiliary inclined plane (A.I.P.)

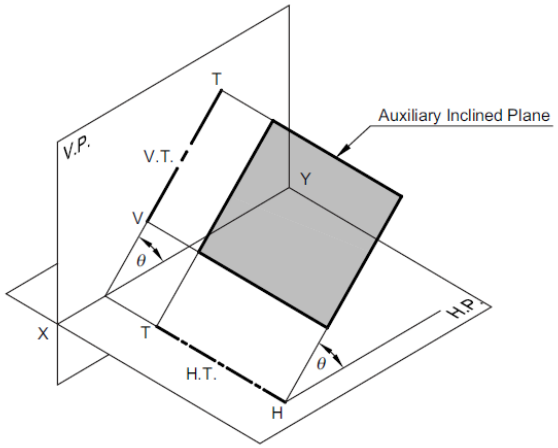

(a)

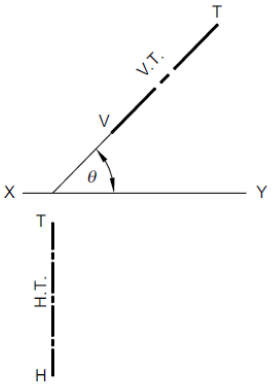

(b)

2. Section Plane Perpendicular to H.P.

a) Section plane parallel to V.P.

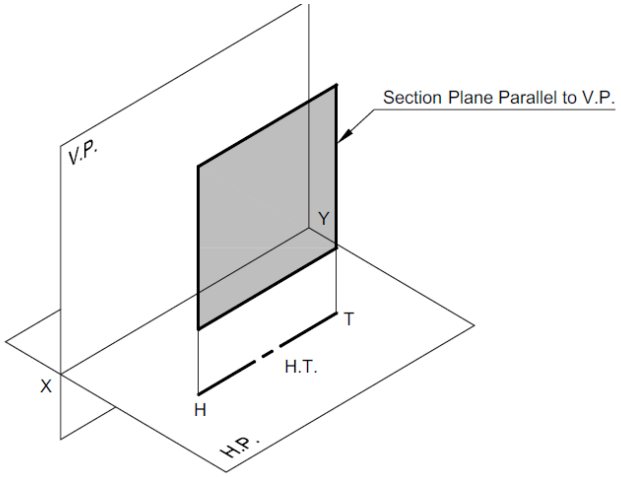

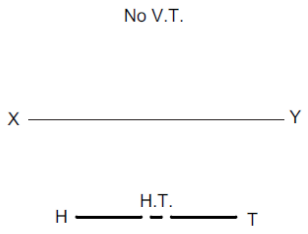

b) Auxiliary vertical plane (A.V.P.)

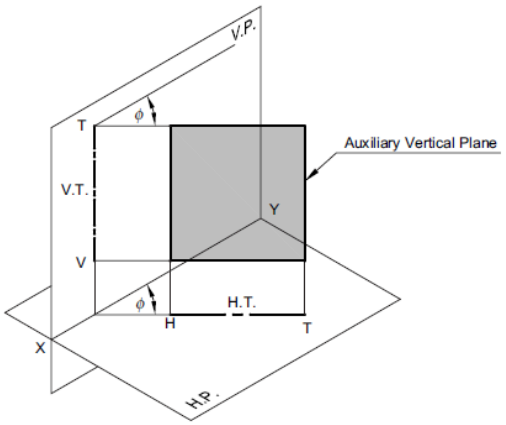

(a)

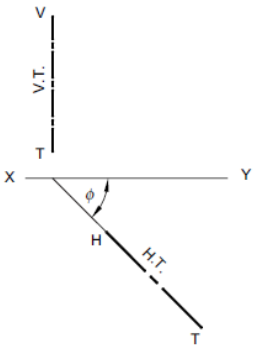

(b)

3. Profile section plane, i.e., a plane perpendicular to both the H.P. and the V.P.

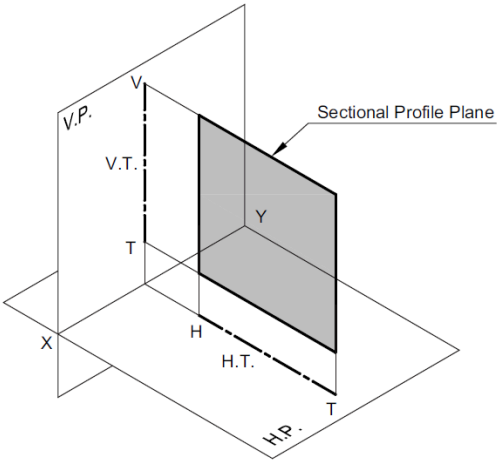

(a)

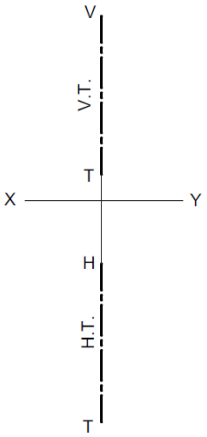

(b)

Problem 12.3 *A pentagonal pyramid of base side 30 mm and axis 60 mm is resting on its base in the H.P. with an edge of the base parallel to the V.P. A horizontal section plane cuts the pyramid bisecting the axis. Draw its front view and sectional top view.*

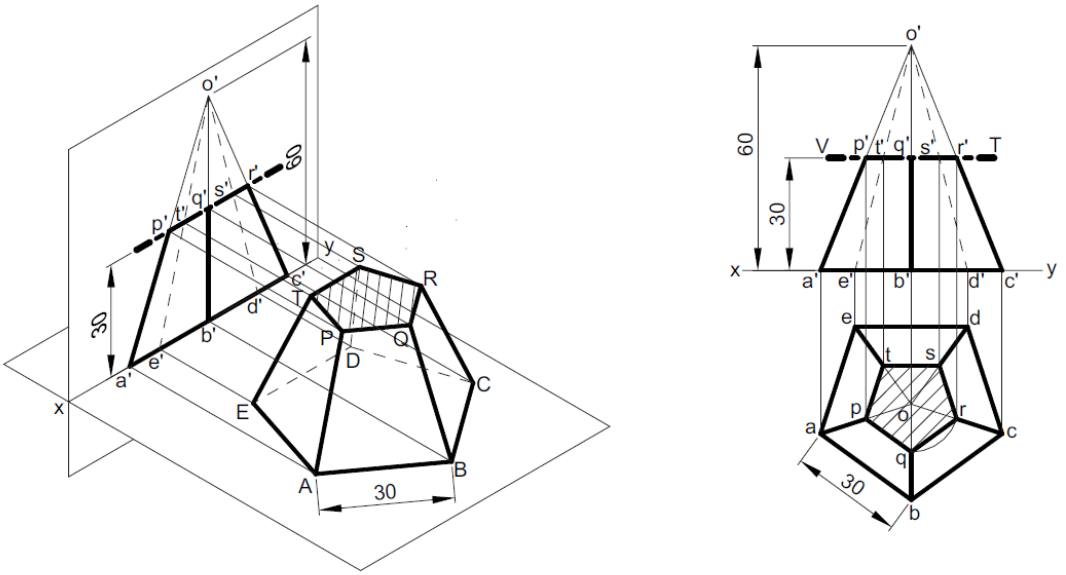

Problem 12.4 *A square pyramid of base side 40 mm and axis 60 mm is resting on its base on the H.P. with a side of base parallel to the V.P. Draw its sectional views and true shape of the section, if it is cut by a section plane perpendicular to the V.P., bisecting the axis and is (a) parallel to the H.P., (b) inclined at 45° to the H.P. (c) inclined at 60° to the H.P.*

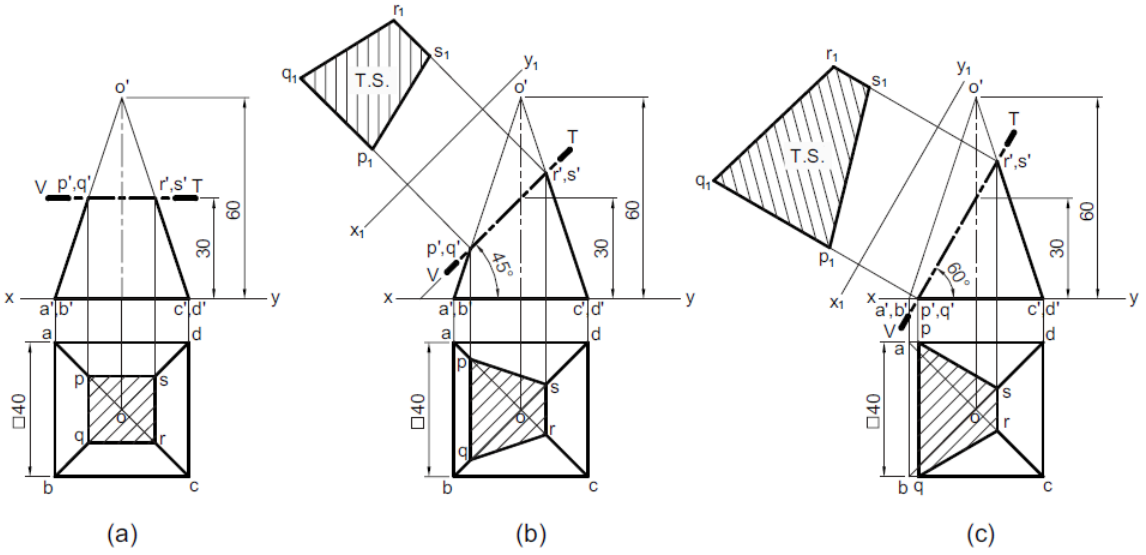

Problem 12.11 *A cone of base diameter 50 mm and axis 60 mm long is resting on its base on the H.P. It is cut by an A.I.P. bisecting the axis inclined at 45° to the H.P. Draw its sectional top view and true shape of the section.*

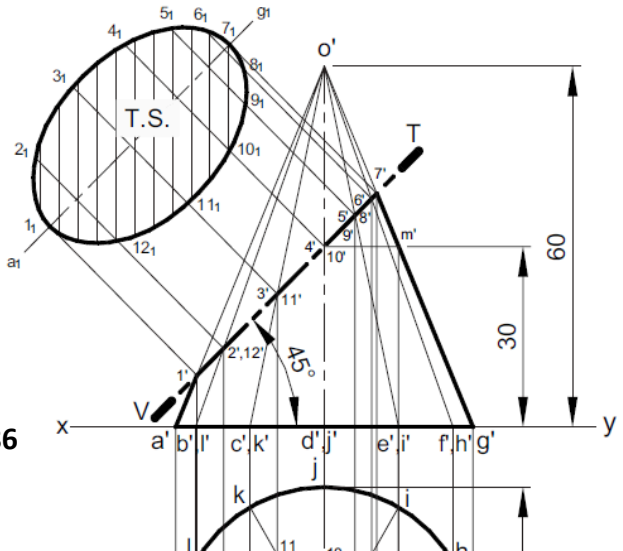

Problem 12.12 *A cone of base diameter 50 mm and axis 60 mm is resting on its base on the H.P. It is cut by an A.I.P. parallel to one of the extreme generators passing through a point on the axis 40 mm from its base. Draw its sectional top view and obtain true shape of the section.*

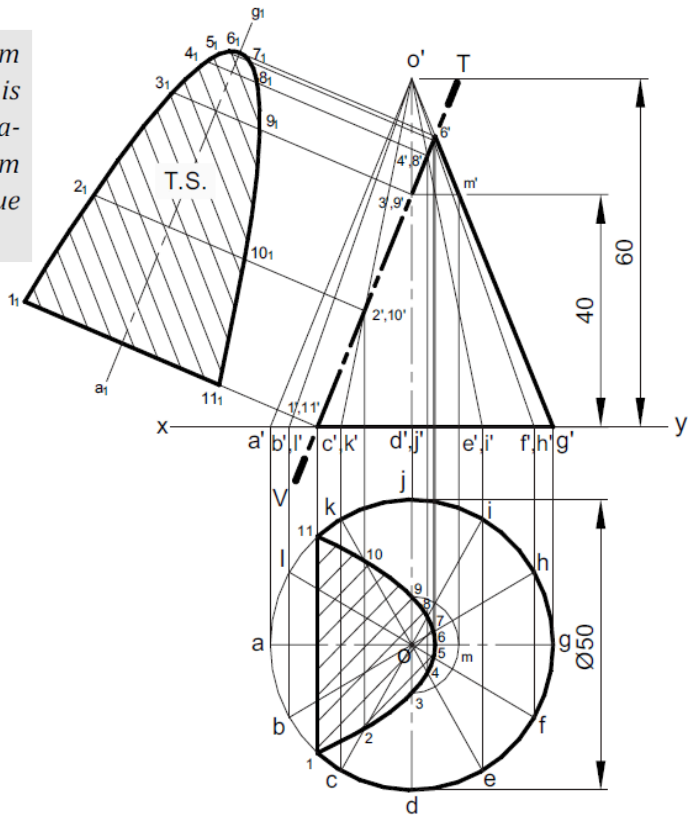

Problem 12.14 *A cylinder of base diameter 50 mm and axis 60 mm is resting on its base on the H.P. It is cut by a section plane perpendicular to V.P., the V.T. of which cuts the axis at a point 40 mm from the bottom face and inclined at 45° to the reference line. Draw its front view, sectional top view and true shape of the section.*

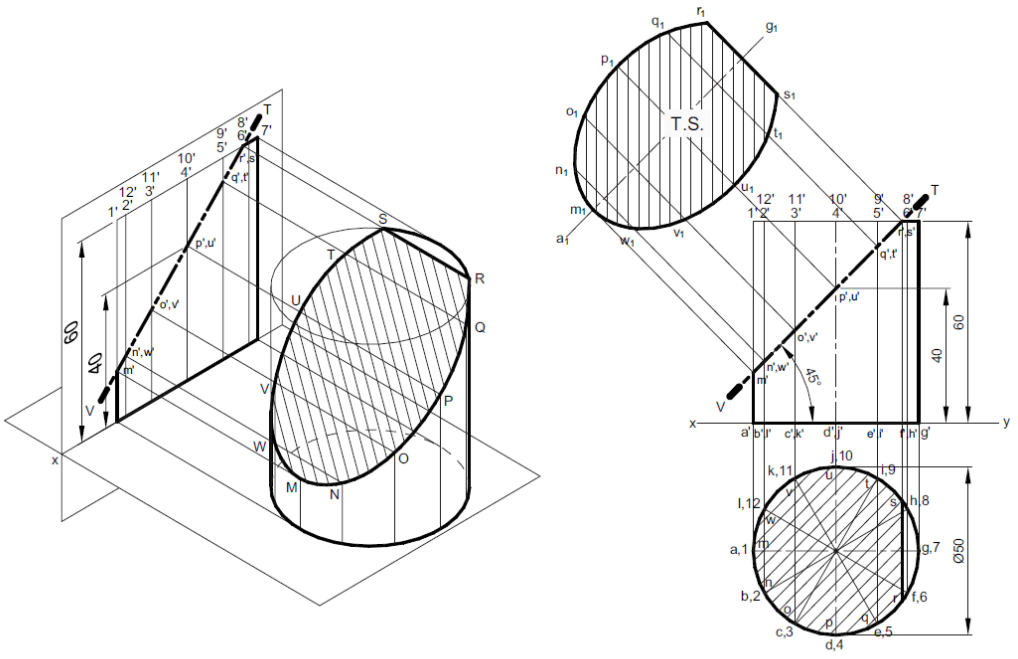

Problems on A.V.P.

Problem 12.24 *A pentagonal pyramid of base side 30 mm and axis 60 mm is resting on its base on the H.P. with a side of base parallel to V.P. and nearer to it. It is cut by a section plane parallel to the V.P. and 12 mm in front of the axis of the pyramid. Draw its sectional front view and top view.*

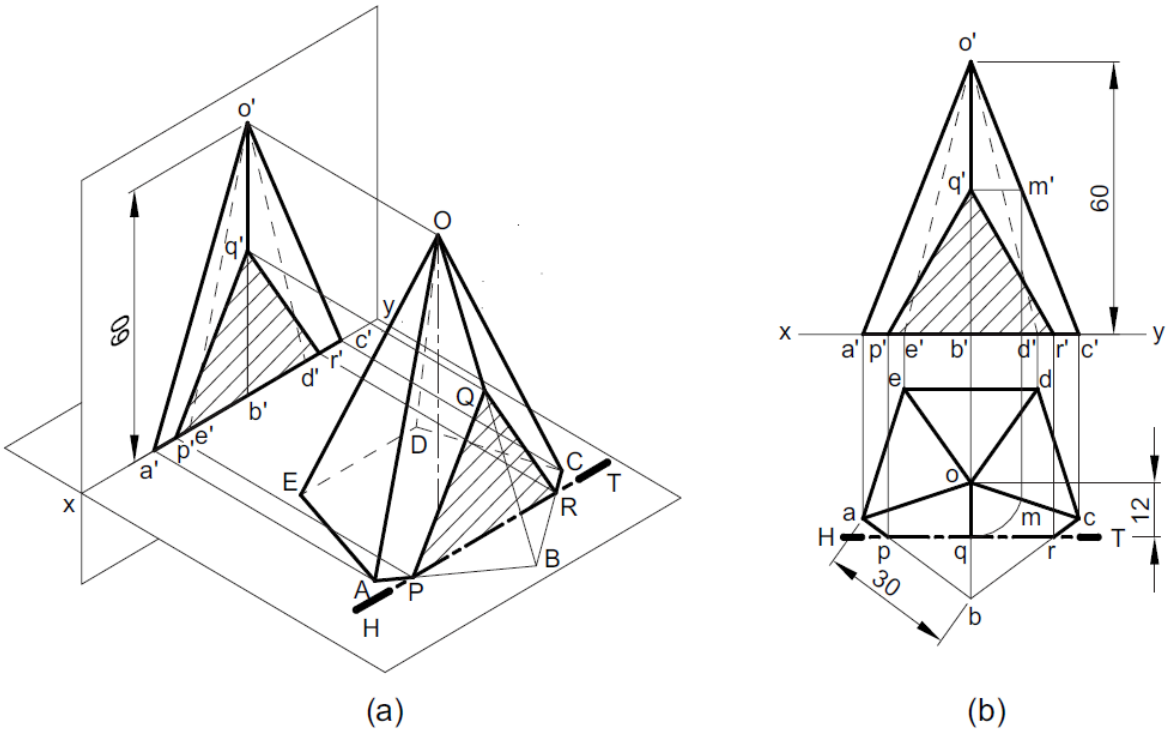

Problem 12.25 *A pentagonal pyramid of base side 30 mm and axis 60 mm is resting on its base on the H.P. with an edge of the base nearer the V.P., parallel to it. A vertical section plane inclined at 45° to the V.P. cuts the pyramid at a distance of 8 mm from the axis. Draw its sectional front view, top view and true shape of the section.*

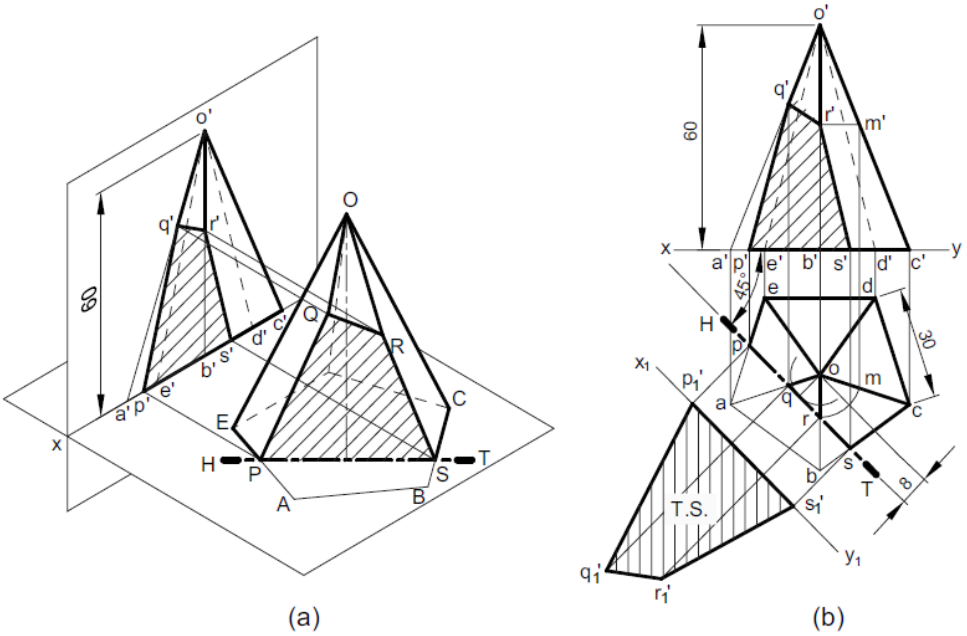

Anti-section of Pyramid

Problem 12.50 *A triangular pyramid of base edge 60 mm and axis 70 mm rests on H.P. with a face perpendicular to the V.P. An A.I.P. cuts the pyramid in such a manner that the true shape of the section is a trapezium of parallel sides 20 mm and 40 mm. Draw the true shape of the section and determine the inclination of the section plane with the horizontal plane.*

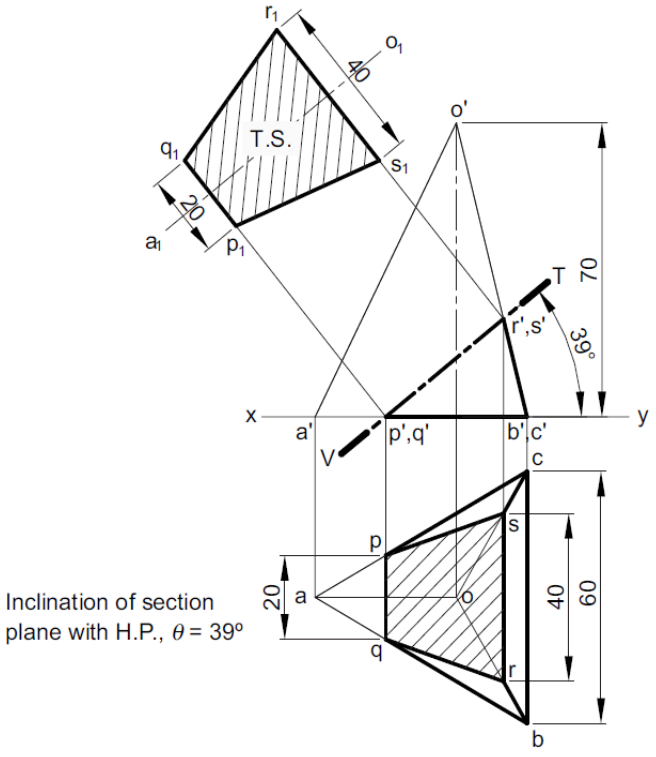

Anti-section of Cone

Problem 12.53 *A cone of base diameter 50 mm and axis 60 mm rests on its base on the H.P. It is cut by an A.I.P. passing through the mid-point of the axis such that true shape of the section is an ellipse of largest major axis. Draw the projections of the truncated cone and true shape of the section.*

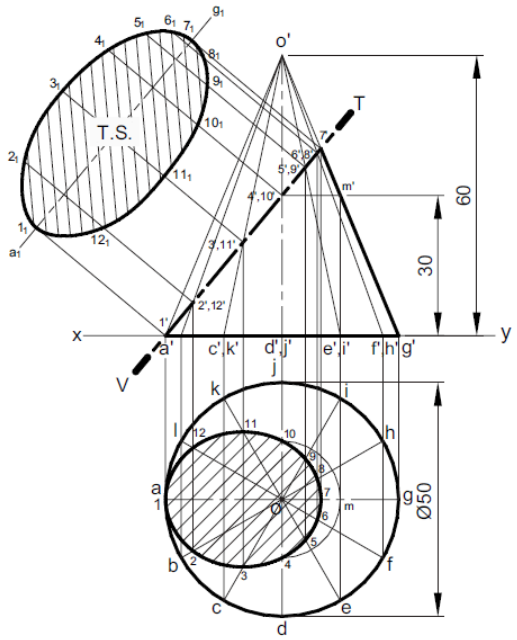

Module 3 Part-2: Development of Surfaces

The development of surface is the shape of a plain sheet that by proper folding could be converted into the desired object. In engineering practice, a large number of objects like milk can, funnel, bucket, measuring flask, duct of air conditioner, hopper, chimney, tray, storage tank, boiler shell etc shown in Fig.



Fig. 13.1 *Metal sheet used for making* **(a)** *Milk can* **(b)** *Funnel* **(c)** *Bucket* **(d)** *Measuring flask* **(e)** *Duct of air conditioner* **(f)** *Hopper* **(g)** *Chimney* **(h)** *Tray*

Methods of development

Parallel line method This method is adopted in the development of prisms and cylinders, in which all the edges/generators of lateral surface are parallel in each other

Radial line method This method is adopted in the development of pyramids and cones in which the apex is taken as centre and the slant edge or generator as radius of its development.

Development of prisms

Problem 13.2 *A pentagonal prism of base side 30 mm and axis 70 mm is resting on its base on the H.P. with a rectangular face parallel to the V.P. It is cut by an auxiliary inclined plane (A.I.P.) whose V.T. is inclined at 45° to the reference line and passes through the mid-point of the axis. Draw the development of the lateral surface of the truncated prism.*

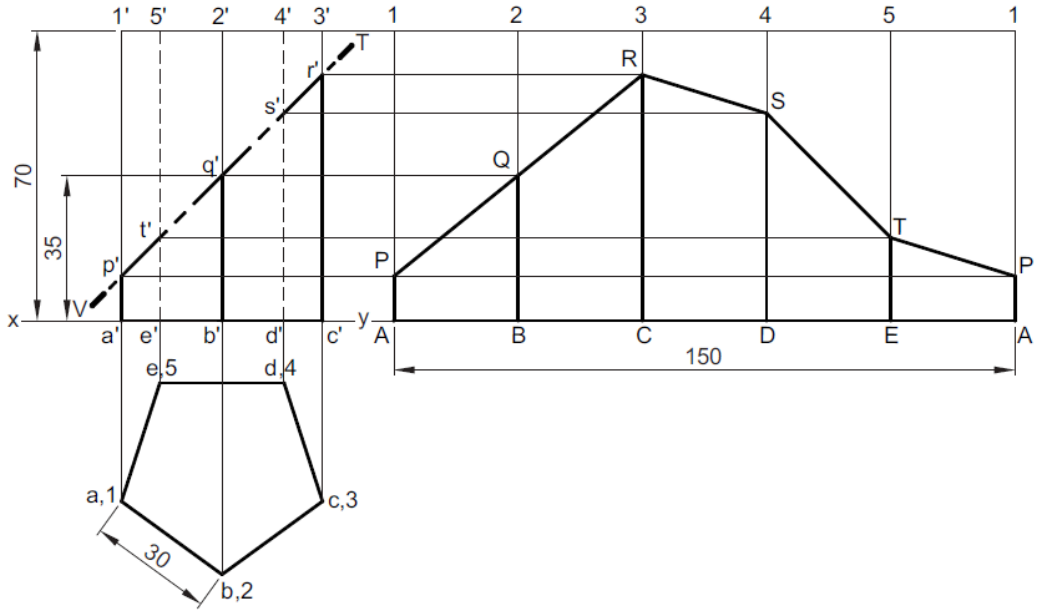

Problem 13.7 *A cylinder of base diameter 50 mm and axis 70 mm is resting on ground with its axis vertical. It is cut by a section plane perpendicular to the V.P., inclined at 45° to the H.P., passing through the top of a generator and cuts all the other generators. Draw the development of its lateral surface.*

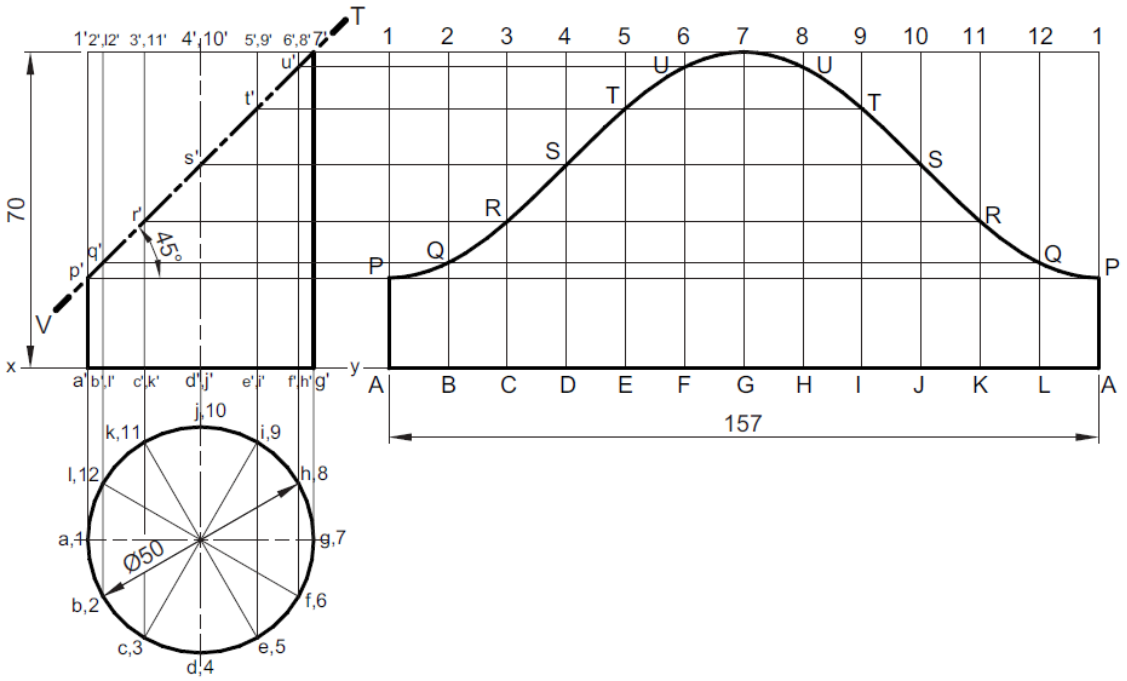

Development of cones

Development of lateral surface of cone is obtained by radial line method. In this method, the development is in the form of sector of a circle, the radius of which is equal to the slant height of the cone. The subtended angle q of this sector is calculated as $\theta = \frac{r}{R} \times 360^0$, where r is the radius of the base circle and R is the slant height of the cone. Alternatively, the arc length of this sector can directly

be transferred from the top view of the base circle. It is done by taking 1/12th of the arc length from the base circle and then marking 12 times in the development. Although approximate, it is one of the most convenient and preferred methods.

Problem 13.14 *A cone of base diameter 50 mm and axis 60 mm is resting on its base on the H.P. Draw the development of its lateral surface when it is cut by an auxiliary inclined plane inclined at 60° to the H.P. and bisecting the axis.*

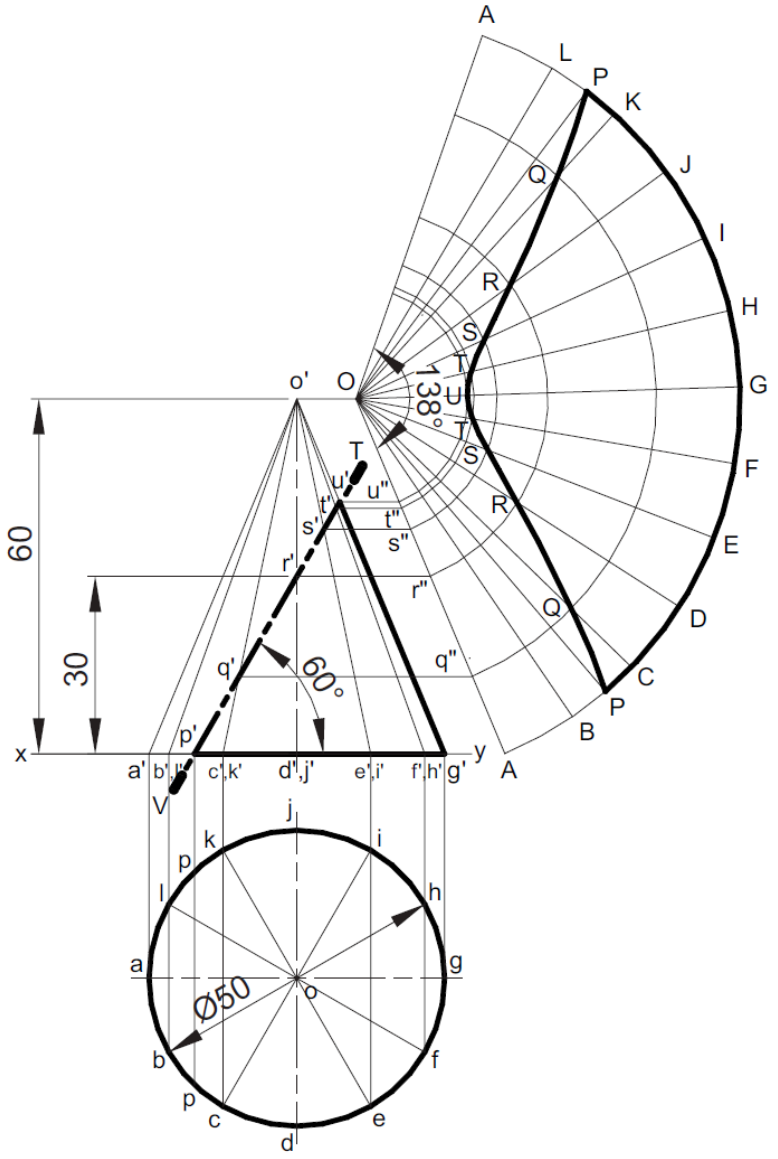

Development of pyramids

Problem 13.19 *A square pyramid of base side 40 mm and axis 60 mm is resting on its base on the H.P. such that all the sides of the base are equally inclined to the V.P. It is cut by a section plane perpendicular to the V.P. and inclined at 60° to the H.P., bisecting the axis. Draw the development of its lateral surface.*

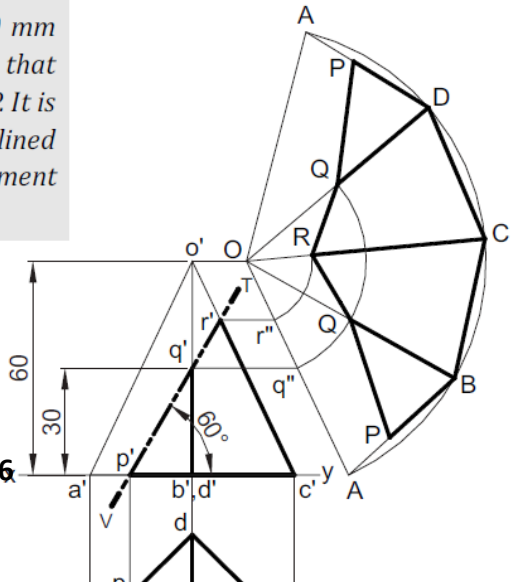

Problem 13.22 *A hexagonal pyramid of base side 30 mm and axis 60 mm, rests on its base on the H.P. with a side of the base parallel to the V.P. It is cut by planes perpendicular to V.P. to obtain the front view as shown in Fig. 13.23(a). Draw the development of the lateral surface of the retained solid.*

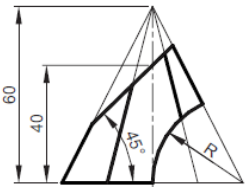

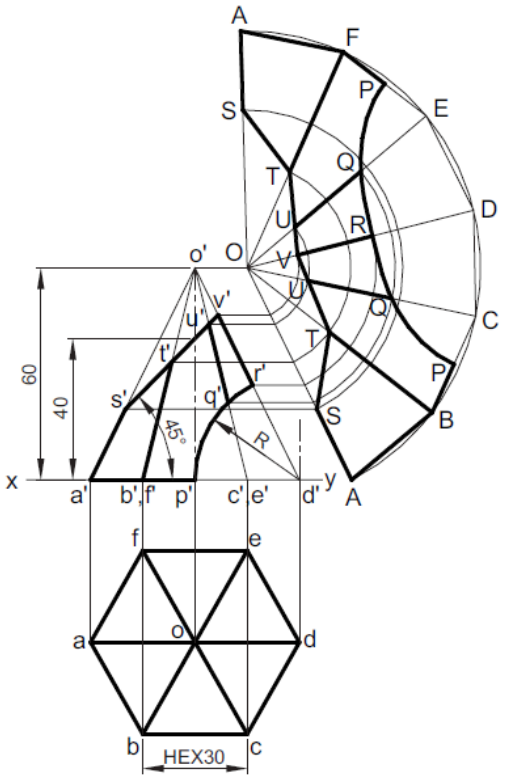

Module 4:
Isometric Drawing

Isometric projection is used to create a pictorial drawing of an object. It is defined as a single-view parallel projection obtained by keeping the object in such a position that all the three mutually perpendicular geometrical axes are equally inclined to the plane of projection. The isometric projection is most popular as it provides the overall view of the object at the first sight.

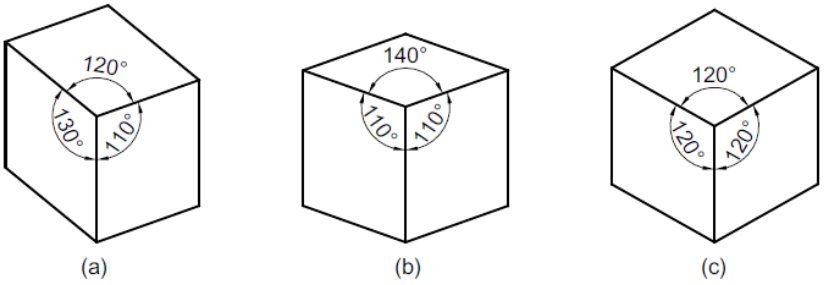

Axonometric projection **(a)** *Trimetric* **(b)** *Dimetric* **(c)** *Isometric*

Principle of isometric projection

The term 'isometric' comes from the Greek language which means 'equal measure', reflecting that the scale along each axis of the projection is the same. The isometric projection can be visualized is by considering a view of a cube with one of the solid diagonals perpendicular to the vertical plane and the three axes equally inclined to the vertical plane as shown in Fig.

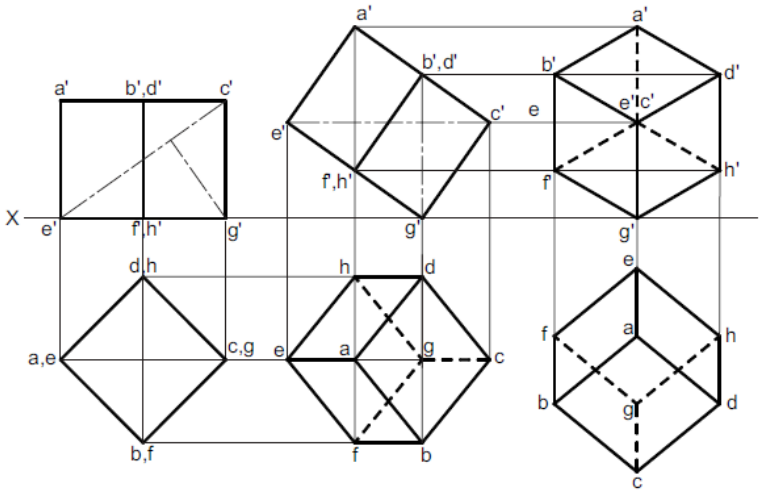

Terminology

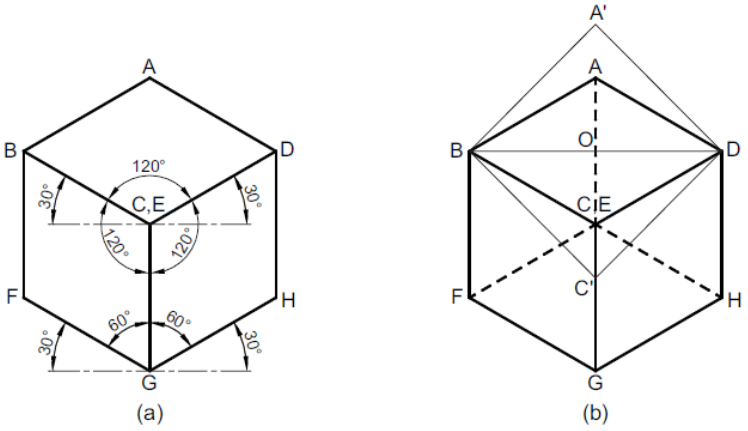

(a) *Analysis of the axes and included angles* **(b)** *Comparison of faces with actual cube*

1. Isometric axes The three lines CB, CD and CG, meeting at point C and inclined at an angle of 120° with each other, are called isometric axes.
2. Isometric lines The lines parallel to the isometric axes are called isometric lines. Here lines AB, BF, FG, GH, DH and AD are isometric lines.
3. Non-isometric lines The lines which are not parallel to isometric axes are known as non-isometric lines. Here diagonals BD, AC, CF, BG, etc., are non-isometric lines.
4. Isometric plane The plane representing any face of the cube as well as other plane parallel to it is called an isometric plane. Here, ABCD, BCGF, CGHD, etc., are isometric planes.
5. Non-isometric plane The plane which is not parallel to isometric planes is known as non-isometric planes. Here, the plane ABGH, CDEF, AFH, CFH, etc., are non-isometric planes.
6. Isometric scale It is the scale which is used to convert the true length into isometric length. Mathematically, Isometric length = 0.816 ×True length

Isometric projection and isometric view

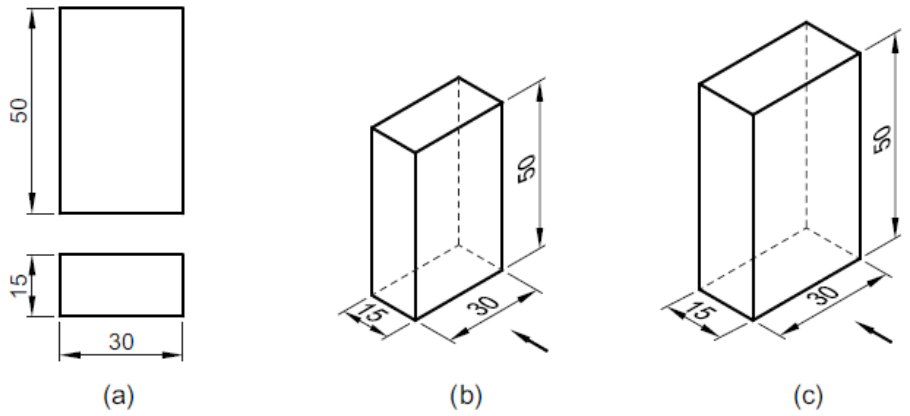

(a) *Orthographic projection* **(b)** *Isometric projection* **(c)** *Isometric view*

Isometric view of planes

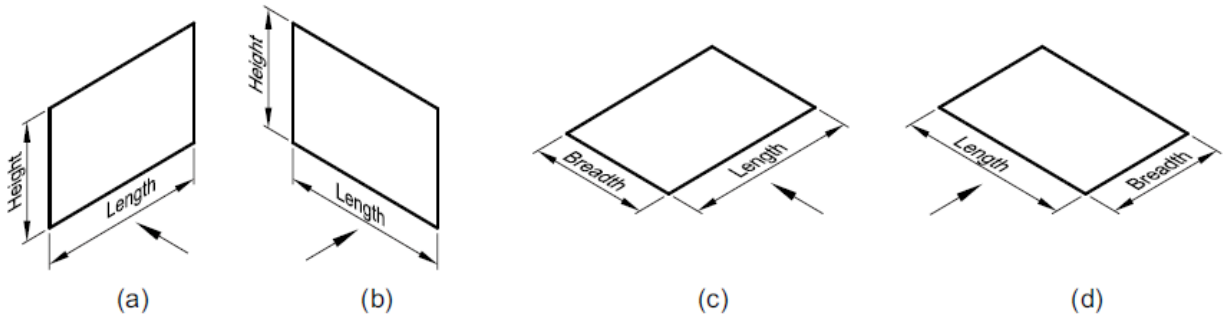

15.6 **(a)** *and* **(b)** *Vertical planes* **(c)** *and* **(d)** *Horizontal planes*

Problem 15.6 *Draw the isometric view of a circle of diameter 60 mm on all the three principal planes using coordinate method.*

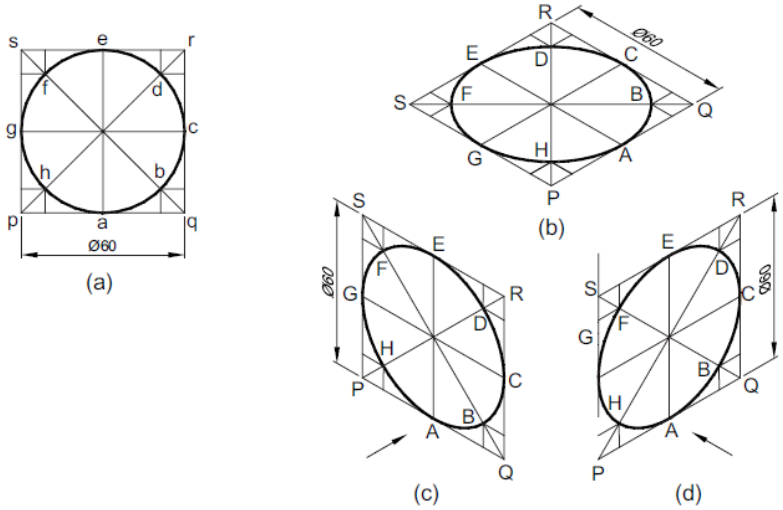

Circle **(a)** *Orthographic view* **(b)** *and* **(c)** *Isometric views on different isometric planes*

Problem 15.7 *Draw the isometric view of a circular lamina of diameter 50 mm on all the three principal planes using four centre method.*

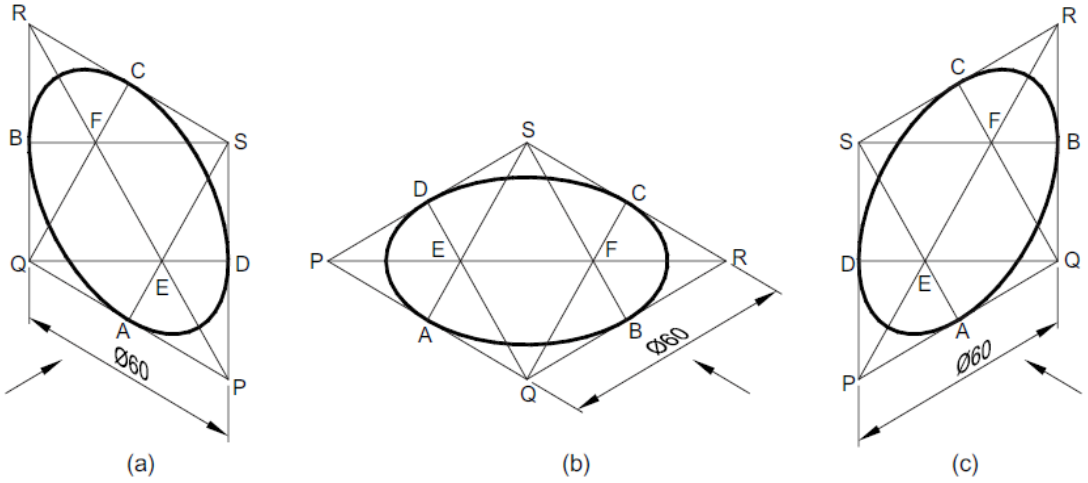

Fig. **(a)** *to* **(c)** *Isometric views of a circle on different isometric planes*

Isometric view of solid containing non-isometric lines

The inclined lines of an object are represented by non-isometric lines. These are drawn by one of the following methods:

1. Box method In the box method, the object is assumed to be enclosed in a rectangular box and both the isometric and non-isometric lines are drawn by locating the corresponding points of contact with the surfaces and edge of the box.

2. Offset method In the offset method, the lines parallel to the isometric axes are drawn from every corner or the reference point of an end to obtain the corner or the reference point at the other end.

Problem 15.10 *Draw the isometric view of a hexagonal prism of base side 30 and axis 70 mm. The prism is resting on its base on the H.P. with an edge of the base parallel to the V.P.*

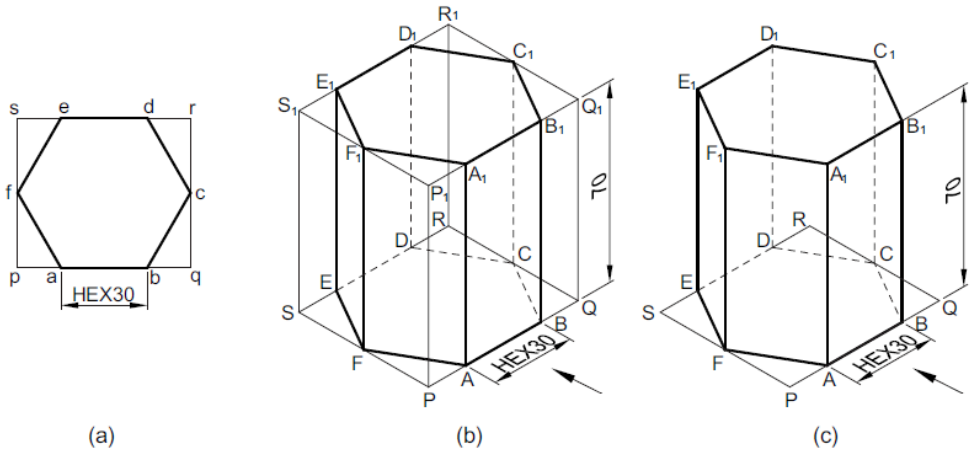

Fig. 15.16 *Hexagonal prism* **(a)** *Top view* **(b)** *and* **(c)** *Isometric views*

Problem 15.12 *Draw the isometric view of a cylinder of base diameter 50 mm and axis 60 mm. The axis of the cylinder is perpendicular to the (a) H.P., (b) V.P.*

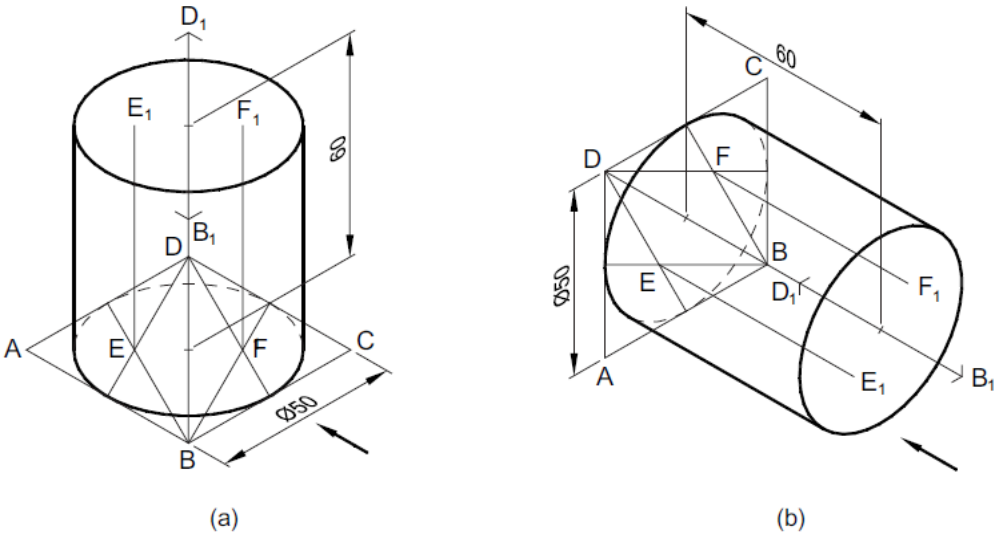

Isometric view of a cylinder having axis perpendicular to the **(a)** *H.P.* **(b)** *V.P.*

Problem 15.14 *Draw the isometric projection of a cone of base diameter 50 mm and axis 60 mm. The cone has its base on the (a) H.P. (b) V.P.*

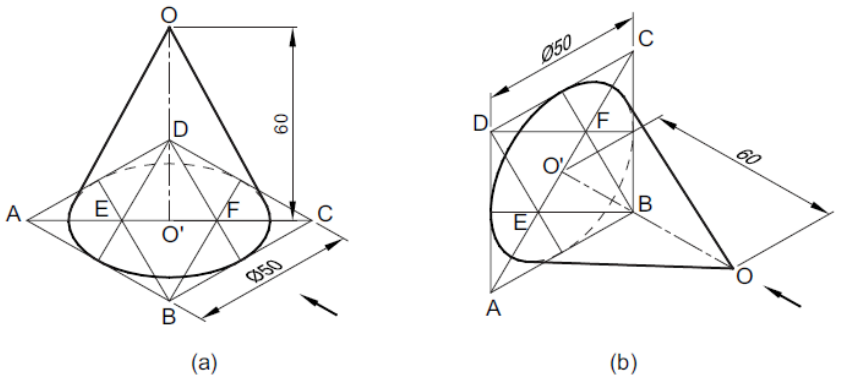

Fig. 15.20 *Isometric projection of a cone having its base on the* **(a)** *H.P.* **(b)** *V.P.*

Problem 15.13 *Draw the isometric view of a pentagonal pyramid of base side 30 mm and axis 50 mm. The pyramid is kept on its base on the (a) H.P. (b) V.P.*

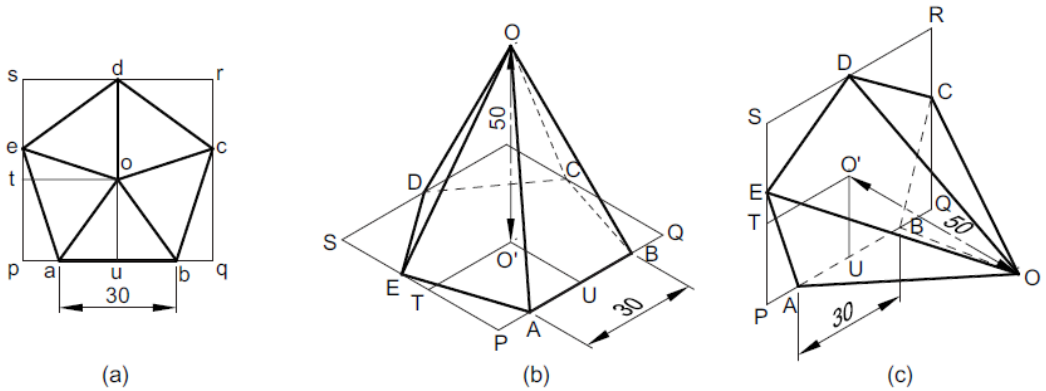

Isometric view of truncated solid

Problem 15.17 *Draw the isometric projection of the frustum of a hexagonal pyramid of base side 40 mm, top side 25 mm and height 70 mm. The frustum rests on the base on the H.P.*

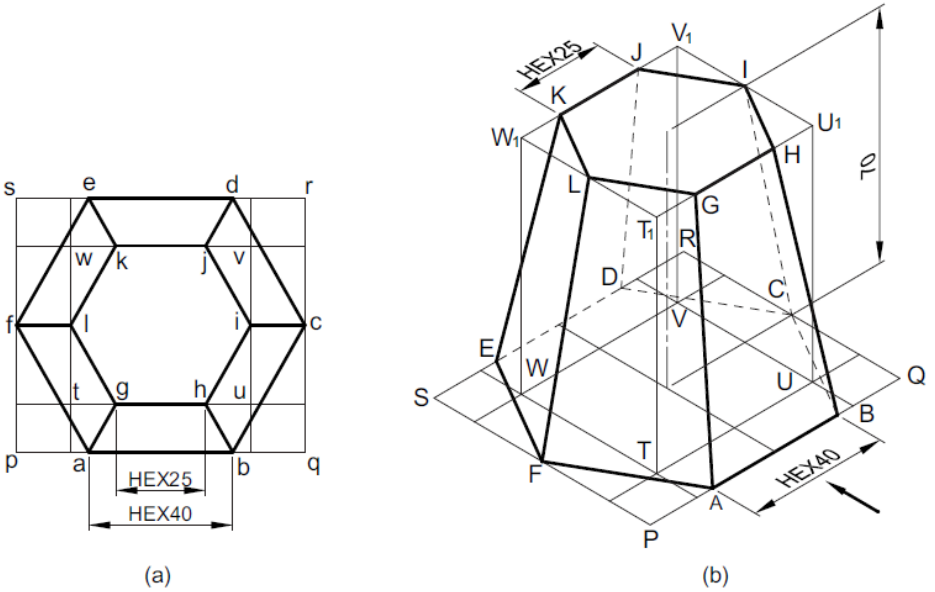

Fig. 15.23 *Frustum of a hexagonal pyramid* **(a)** *Top view on a scale factor* **(b)** *Isometric projection or view*

Isometric view of composite solids

Problem 15.22 *A square pyramid of base side 25 mm and axis 40 mm rests centrally over a cylindrical block of base diameter 50 mm and thickness 20 mm. Draw the isometric projection of the arrangement.*

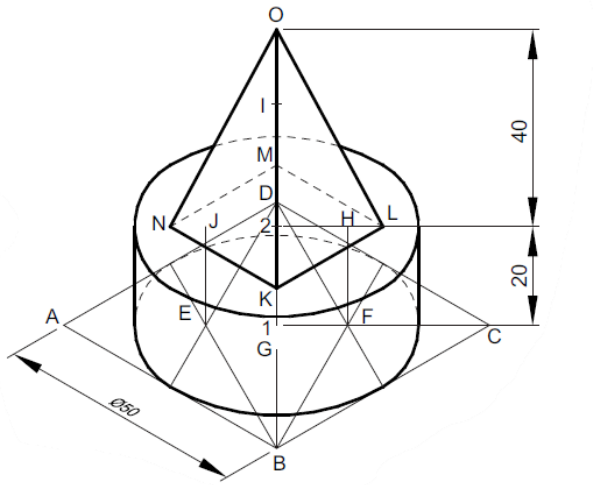

Problem 15.25 *A hexagonal prism of base side 25 mm and axis 70 mm is placed centrally on its rectangular face over a cylindrical block of base diameter 80 mm and thickness 30 mm. Draw the isomeric projection of the arrangement.*

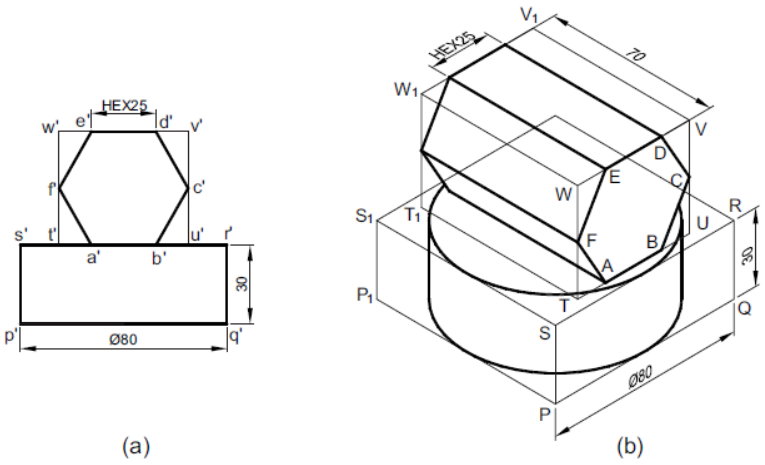

Fig. 15.31 *Hexagonal prism placed over a cylindrical block* **(a)** *Front view on a scale factor of 0.816* **(b)** *Isometric projection*

Problem 15.26 *A cone is placed centrally on the top of a cube of 40 mm side which is placed centrally over a cylindrical block. The cone has its base diameter 30 mm and axis 30 mm. The cylindrical block has its base diameter 70 mm and thickness 20 mm. Draw isometric projection of the arrangement.*

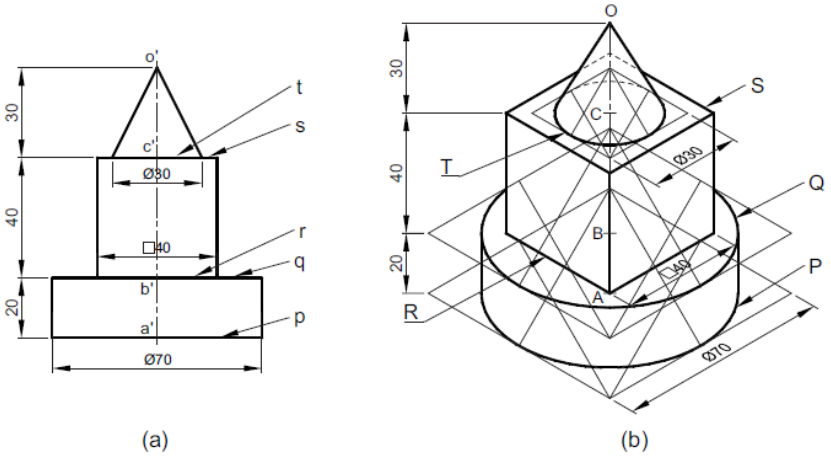

Fig. 15.32 *Combination of solids* **(a)** *Front view* **(b)** *Isometric projection*

Module 5 Part-1:
Perspective Projection

Perspective projection is a three-dimensional representation of an object on a plane as it is perceived by the human eye from a particular point. It is a geometric method of obtaining images which are similar to the photographs taken by a camera. The major difference between parallel projection, be it orthographic oblique or isometric, and perspective projection lies in the fact that, in the later case, the point of sight is at a finite distance from the object. The projectors from the object therefore converge to the point of sight instead of being parallel to each other as in the former types of projection. Such drawing is also known as scenographic projection or central projection.

Perspective projections are extensively used by architects and civil engineers to show the appearance of proposed buildings, roads, railroad tracks and interior designs. Because the perspective projection shows an object as it actually appears to the human eyes, it is also used for producing sceneries and advertising drawings.

Types of perspective

Depending upon the nature of the object, perspective drawings can be of one of the following types:

1. One-point perspective or parallel perspective
2. Two-point perspective or angular perspective
3. Three-point perspective or oblique perspective
4. Zero-point perspective
5. Infinite-point perspective
6. Aerial perspective or atmospheric perspective

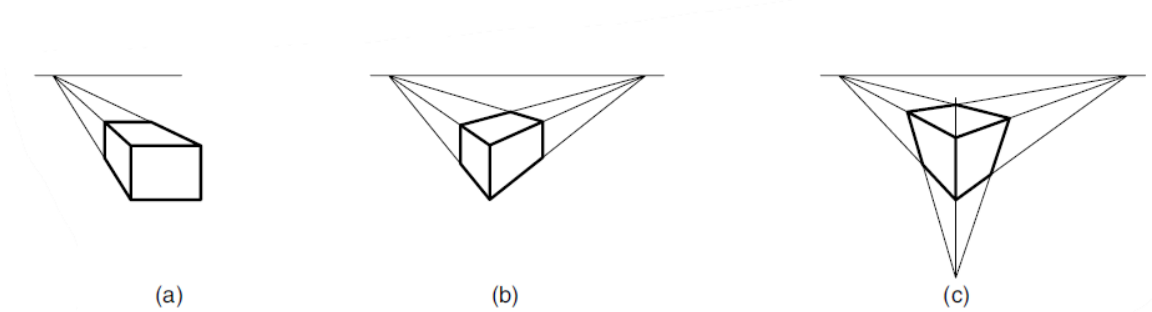

(a) *One-point perspective* **(b)** *Two-point perspective* **(c)** *Three-point perspective*

Characteristic features of perspective projections

The characteristic features of perspective projections are given below.

1. Parallel lines no longer remain parallel.
2. Horizontal parallel lines converge to a single point on the distant horizon.

3. Objects become smaller as their distance from the observer increases

Terminology

The following terms are frequently used in perspective projections:

1. **Ground plane (GP)** It is a flat natural surface or a horizontal plane on which the object is placed. The observer also stands on this plane to view the object from a convenient distance.
2. **Station point (SP)** Station point is the position of the observer's eye while viewing the object. It is the convergence point for light that creates the image.
3. **Picture plane (PP)** It is a two-dimensional surface in front of the observer and perpendicular to the ground plane. The perspective view of the object is obtained on this plane. It is analogous to the vertical plane used in the orthographic projections. This plane is also used to draw the front view of the perspective rays and sometimes that of the object.
4. **Horizon plane (HP)** It is an imaginary horizontal plane parallel to the ground plane passing through the observer's eye or the station point.
5. **Auxiliary ground plane (AGP)** It is also an imaginary horizontal plane parallel to the ground plane and placed above the horizon plane. This plane is used to draw the top view of the perspective rays and the object.
6. **Central plane (CP)** It is an imaginary vertical plane perpendicular to both the ground plane and the picture plane passing through the station point.
7. **Ground line (GL)** It is the line of intersection of the ground plane with the picture plane. This line is the horizontal trace of the picture plane on the ground plane.
8. **Horizon line (HL)** It is the line of intersection of the horizon plane with the picture plane. This line is the vertical trace of the horizon plane on the picture plane. It is the line where the sky meets the earth. All points vanish to this line. It is also called eye level.
9. **Centre line (CL)** It is the line of intersection of the central plane with the picture plane. This line is the vertical trace of the central plane on the picture plane.
10. **Axis of vision (AV)** It is a line drawn from the station point perpendicular to the picture plane. It is also known as the line of sight of viewpoint, central ray, axis of sight, perpendicular axis or principal visual ray.
11. **Centre of vision** It is the point of intersection of the axis of vision with the horizon line.
12. **Visual rays** These are the lines joining the different points on the object to the station point.
13. **Vanishing point** Parallel lines on the same axis converge at a point on the horizon line. This point of convergence is called the vanishing point.
14. **Horizontal distance** It is the distance between the station point and the picture plane.
15. **Height of projection** It is the distance of the station point above the ground plane.

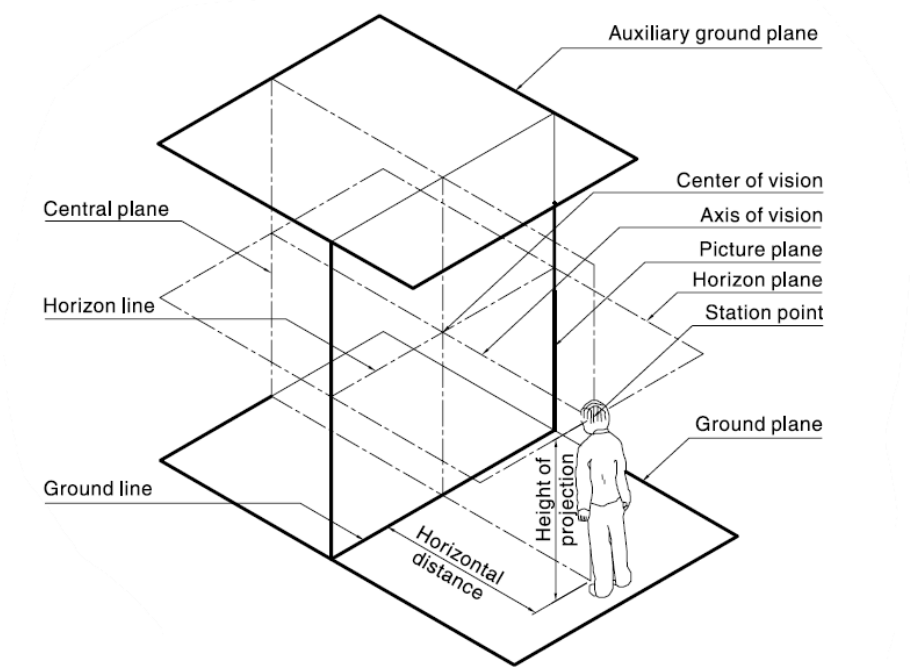

Terminology used in perspective projection

Methods of drawing perspective views

There are two common methods of drawing perspective views of an object:

1. Visual ray method and its alternative method
2. Vanishing point method and its alternative method

Problem 17.4 *Draw a perspective view of a square prism of base side 40 mm and axis 60 mm, resting on its base in the GP with its axis that is 40 mm behind the PP and a vertical face right to the axis inclined at 60° to it. The station point is 50 mm in front of PP, 90 mm above GP and lies in a CP which is 50 mm towards right of the axis.*

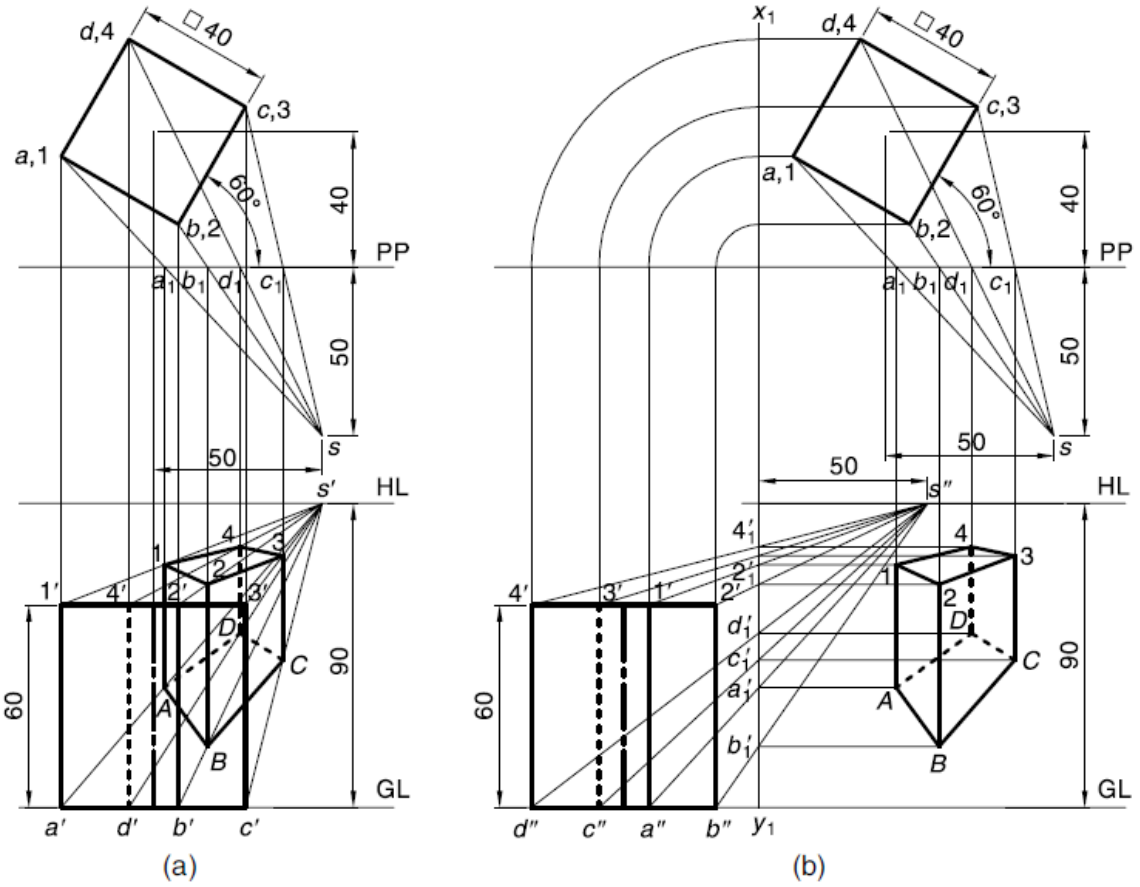

(a) *Visual ray method* **(b)** *Visual ray method*

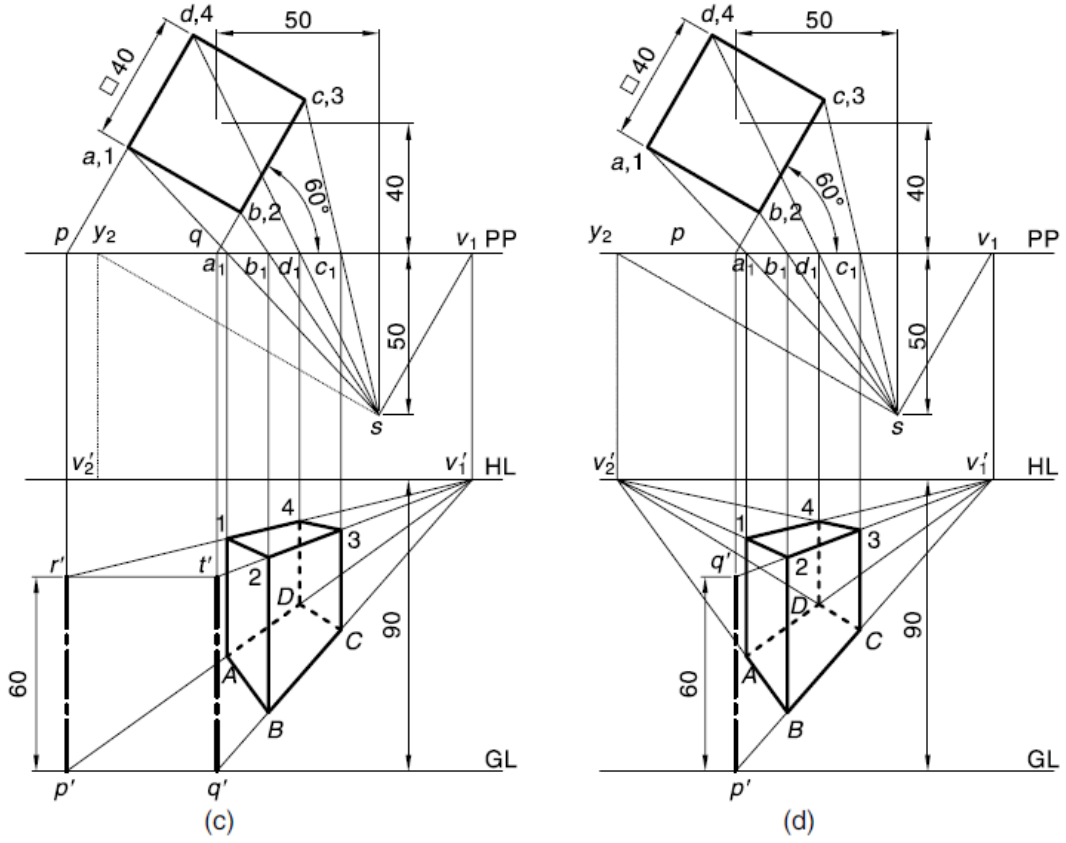

(c) *Vanishing point method* **(d)** *Vanishing point method*

Problem 17.5 *Draw a perspective view of a square pyramid of base side 40 mm and axis 60 mm, resting on its base in the GP with its axis 40 mm behind the PP and an edge of the base right to the axis inclined at 60° to it. The station point is 50 mm in front of PP, 90 mm above GP and lies in a CP which is 50 mm towards the right of the axis.*

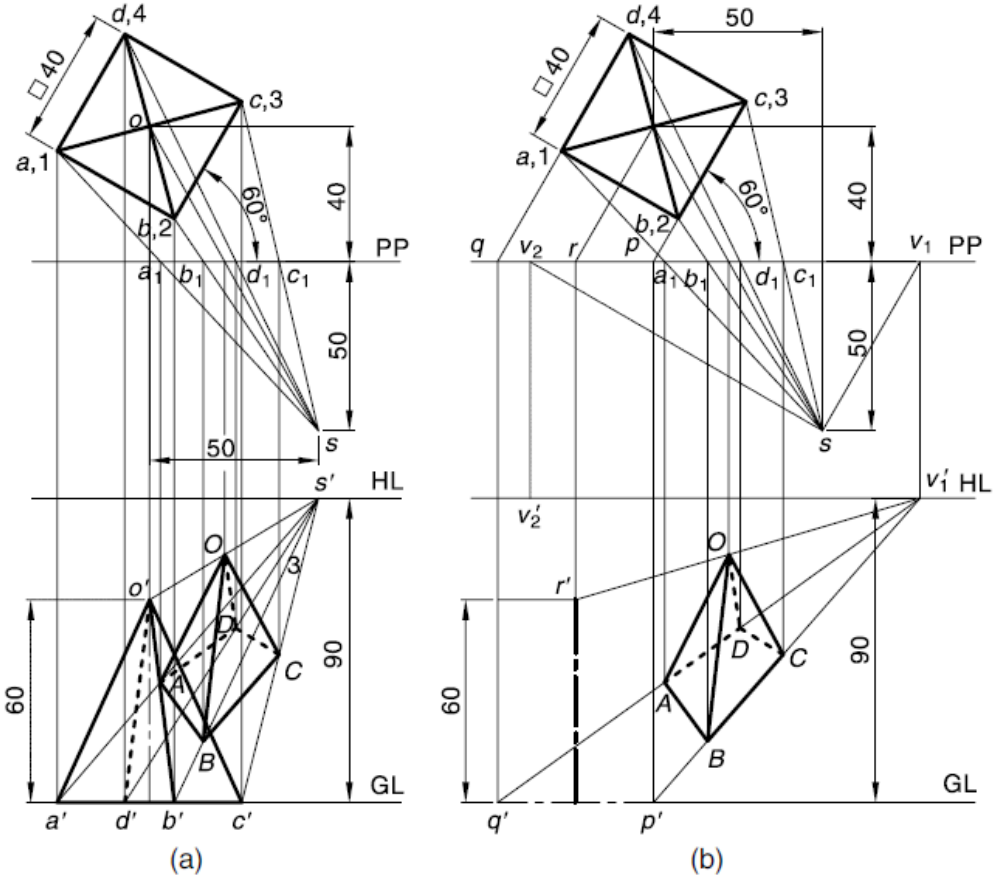

(a) *Visual ray method* **(b)** *Vanishing point method*

Module 5 Part-2:
Multi-view drawing

Multi-view drawing requires two or more orthographic projections to define the exact shape of a threedimensional object. Each orthographic view is a two-dimensional rawing showing only two out of three dimensions of the object. Consequently, no single view contains sufficient information to completely define the shape of the object.

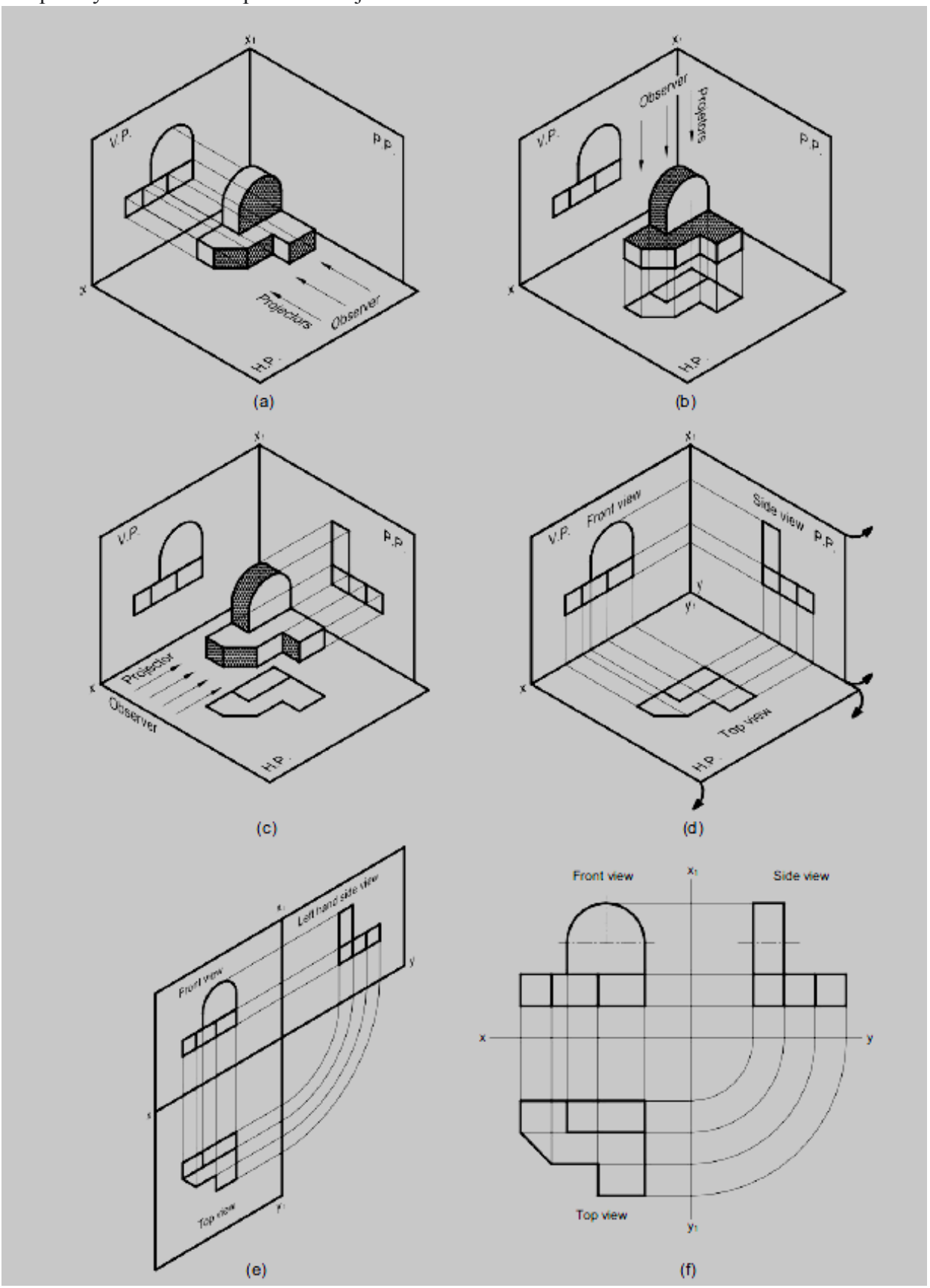

All orthographic views must be correlated together to interpret the object. The arrangement and relationship among the views are therefore inter-related. The standards and conventions of multi-view drawings have been developed over many years.

Problem 7.1 *Pictorial view of an object is shown in Fig. 7.13(a). Using first angle projection, draw its (a) front view from the X-direction, (b) top view and (c) left-hand side view.*

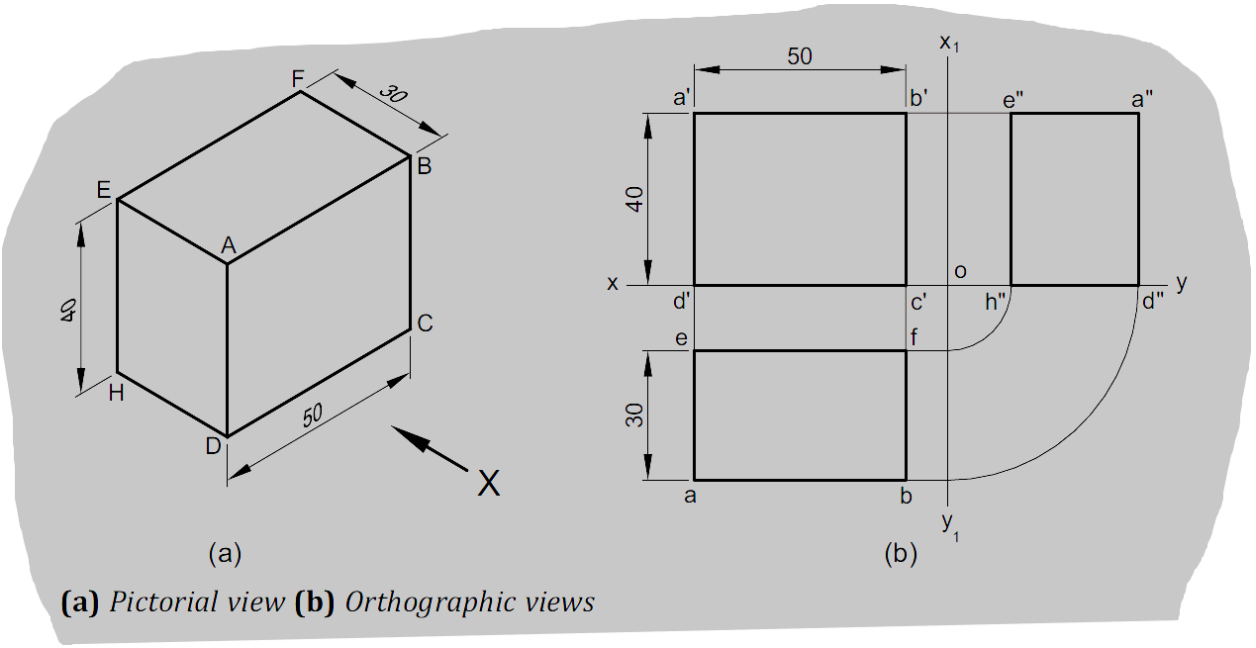

(a) *Pictorial view* **(b)** *Orthographic views*

Problem 7.2 *Pictorial view of an object is shown in Fig. 7.14(a). Using first angle projection, draw its (a) front view from the X-direction, (b) top view and (c) left-hand side view.*

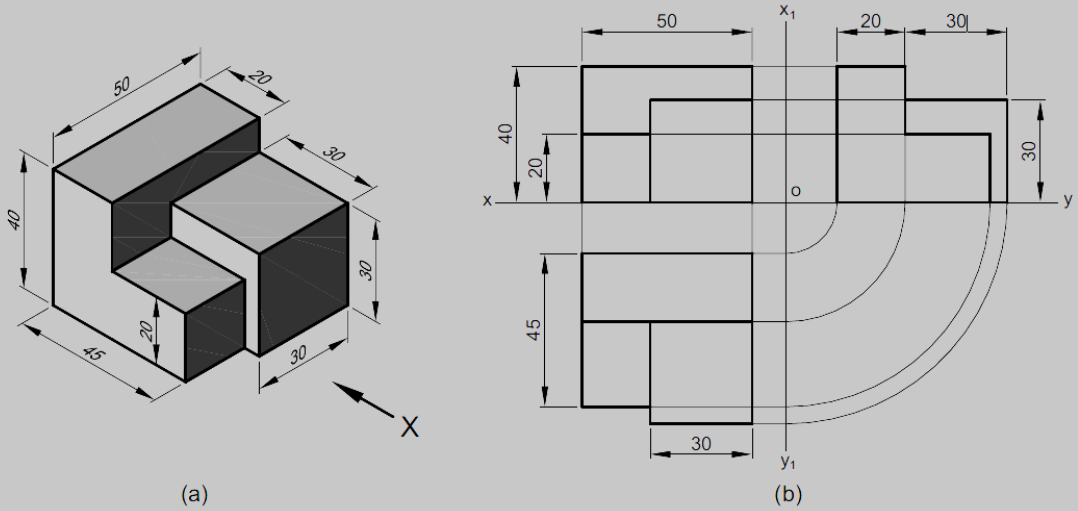

Fig. 7.14 **(a)** *Pictorial view of simple block* **(b)** *Orthographic views*

Problem 7.3 *Pictorial view of an object is shown in Fig. 7.15(a). Using first angle projection, draw its (a) front view from the X-direction, (b) top view and (c) left-hand side view.*

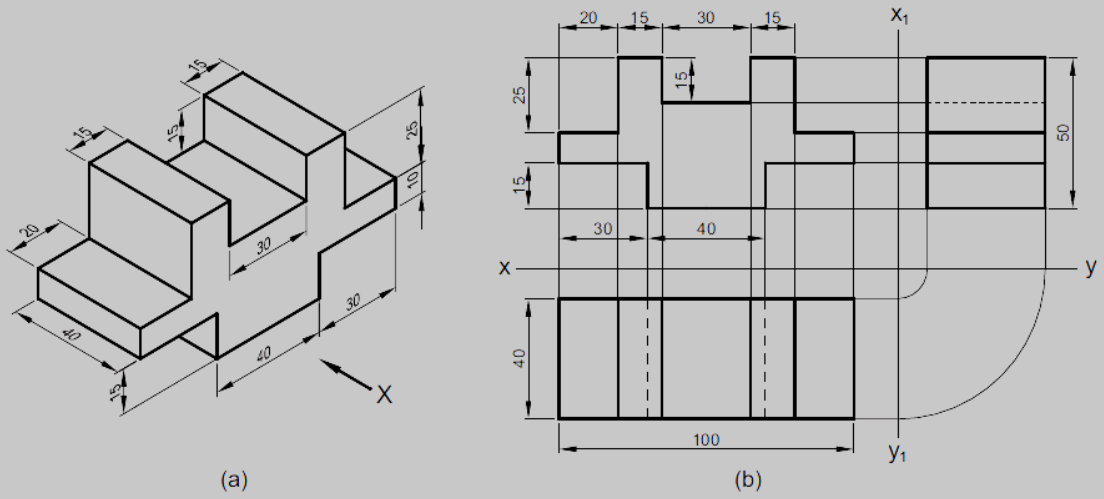

Problem 7.4 *Pictorial view of an object is shown in Fig. 7.16(a). Using first angle projection, draw its (a) front view from the X-direction, (b) top view and (c) left-hand side view.*

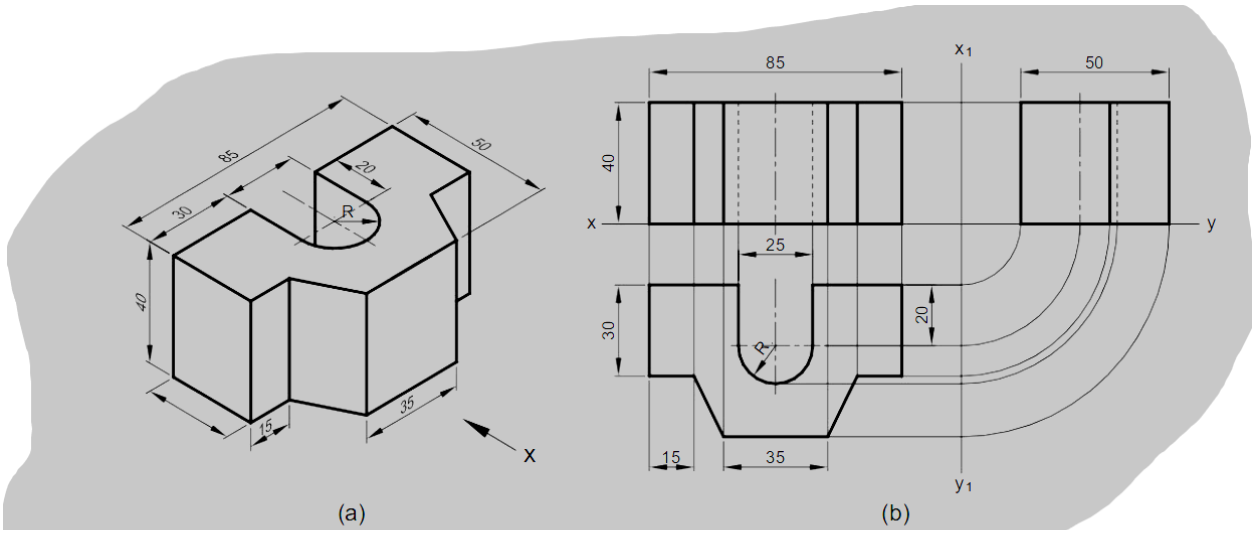

Problem 7.6 *Pictorial view of an object is shown in Fig. 7.20(a). Using first angle projection, draw its (a) front view, (b) top view and (c) right-hand side view.*

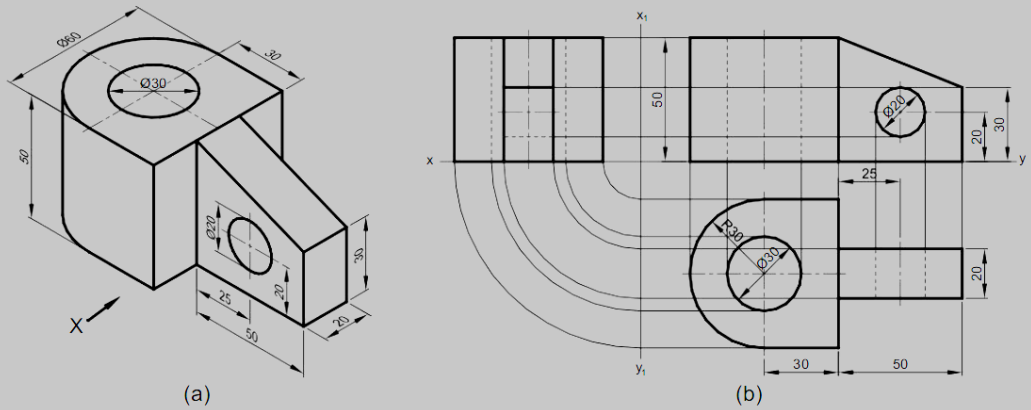

Fig. 7.20 **(a)** *Pictorial view* **(b)** *Orthographic views*

Problem 7.5 *Pictorial view of an object is shown in Fig. 7.17(a). Using first angle projection, draw its (a) front view, (b) top view and (c) right-hand side view.*

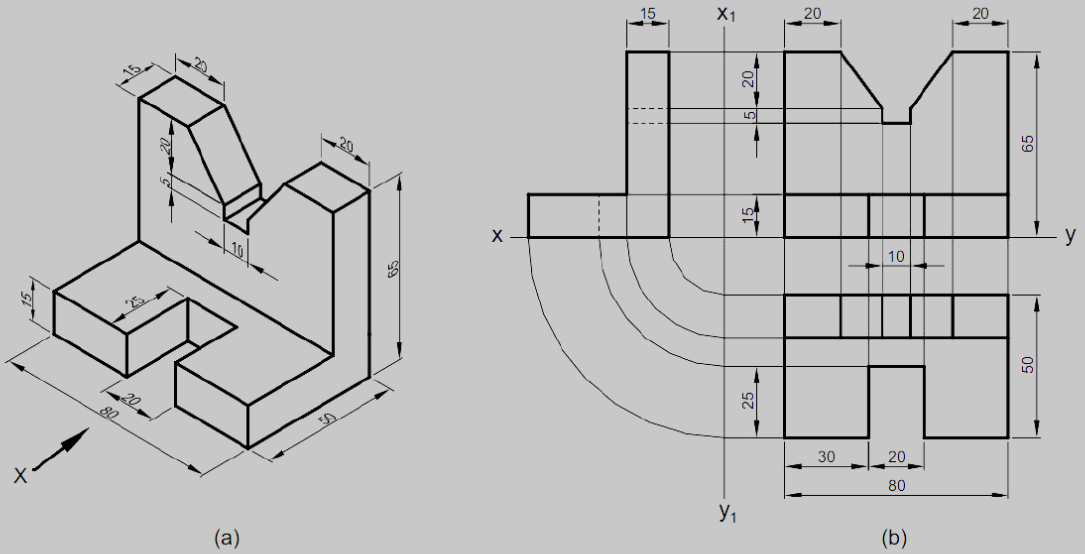

Problem 7.7 *Pictorial view of an object is shown in Fig. 7.23(a). Using first angle projection, draw its (a) front view, (b) top view and (c) right-hand side view.*

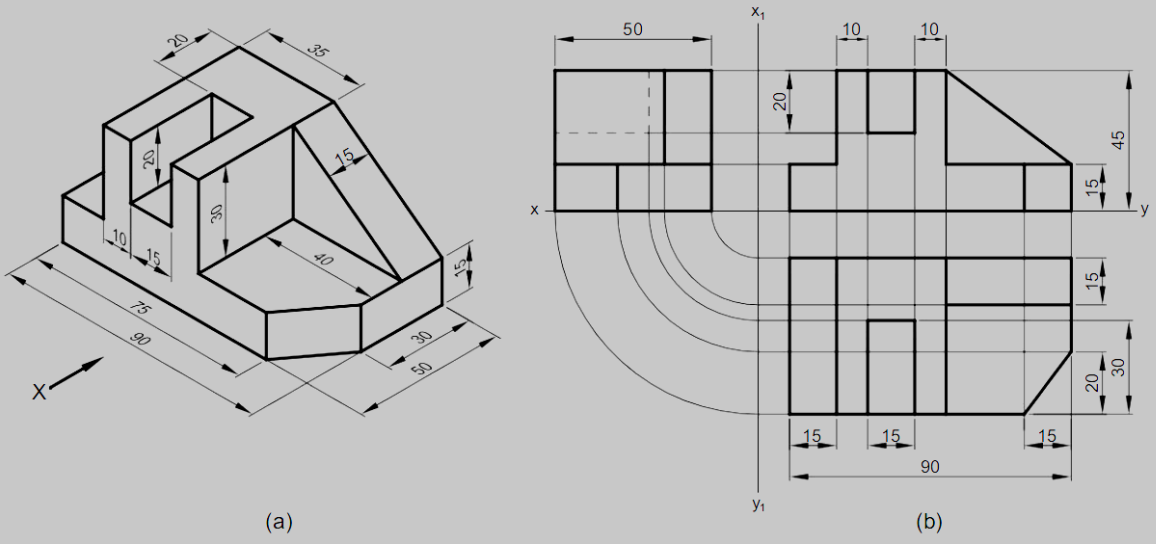

Problem 7.8 *Pictorial view of an object is shown in Fig. 7.24(a). Using first angle projection, draw its (a) front view, (b) top view and (c) side view.*

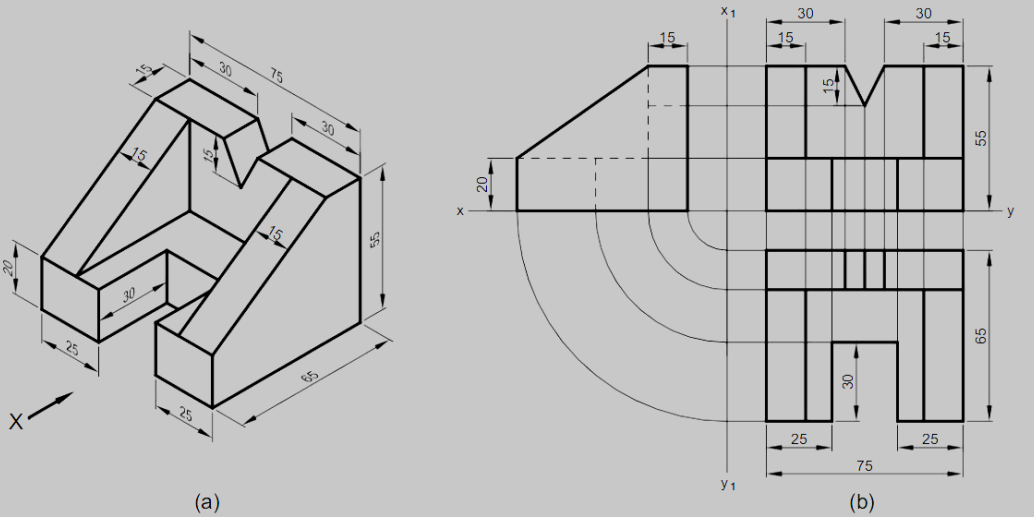

Problem 7.11 *Pictorial view of an object is shown in Fig. 7.27(a). Using first angle projection, draw its (a) front view, (b) top view and (c) side view.*

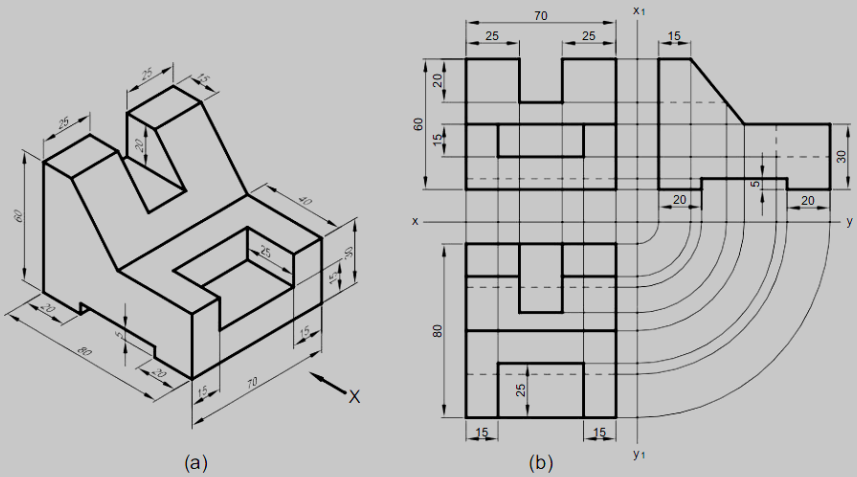

Problem 7.16 *Pictorial view of an object is shown in Fig. 7.32(a). Using first angle projection, draw its (a) front view, (b) top view and (c) side view.*

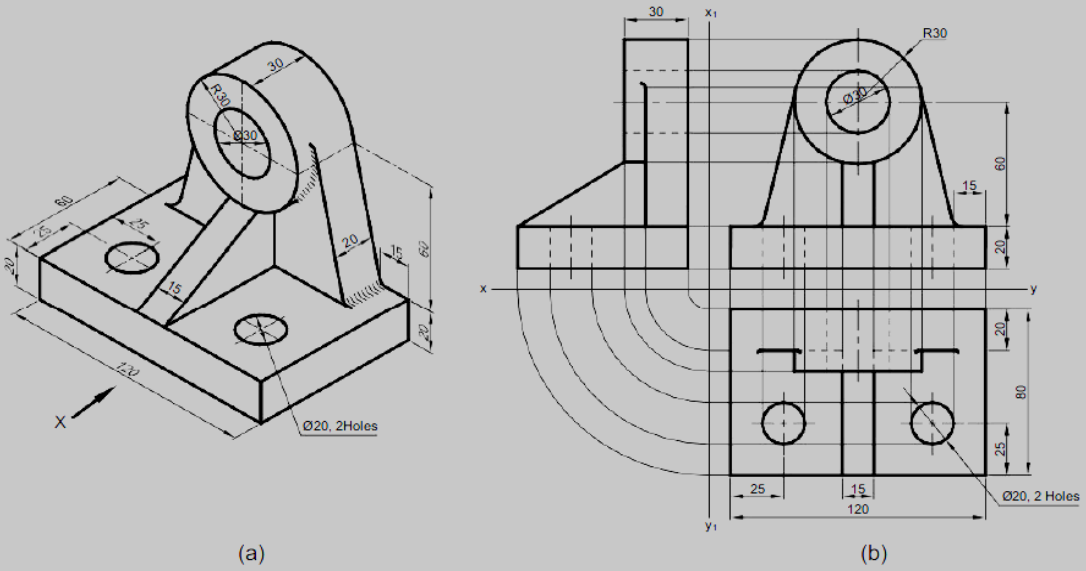

Problem 7.18 *Pictorial view of an object is shown in Fig. 7.34(a). Using first angle projection, draw its (a) front view, (b) top view and (c) side view.*

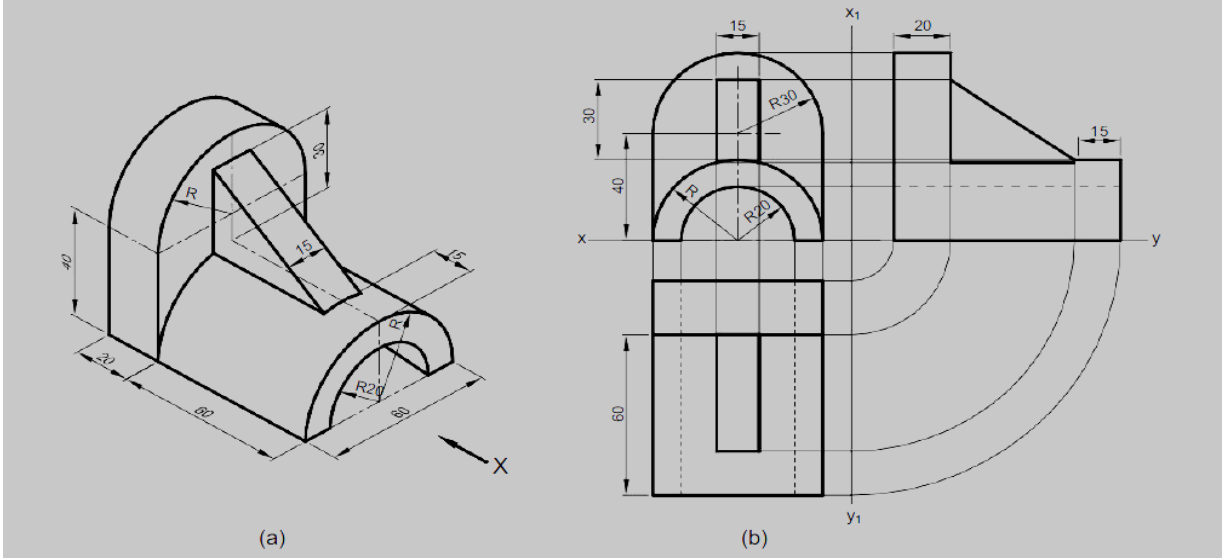

Draw three views of the objects shown in Figs. using first angle projection.

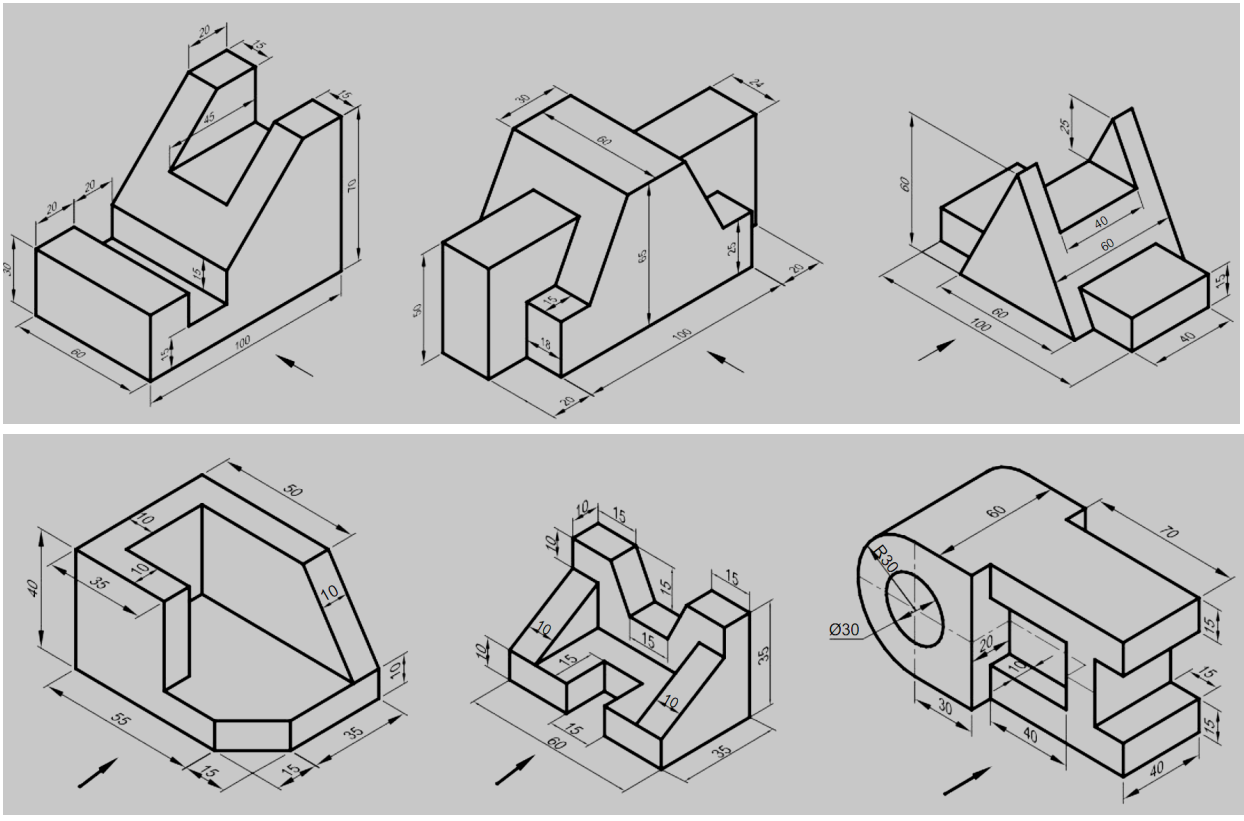

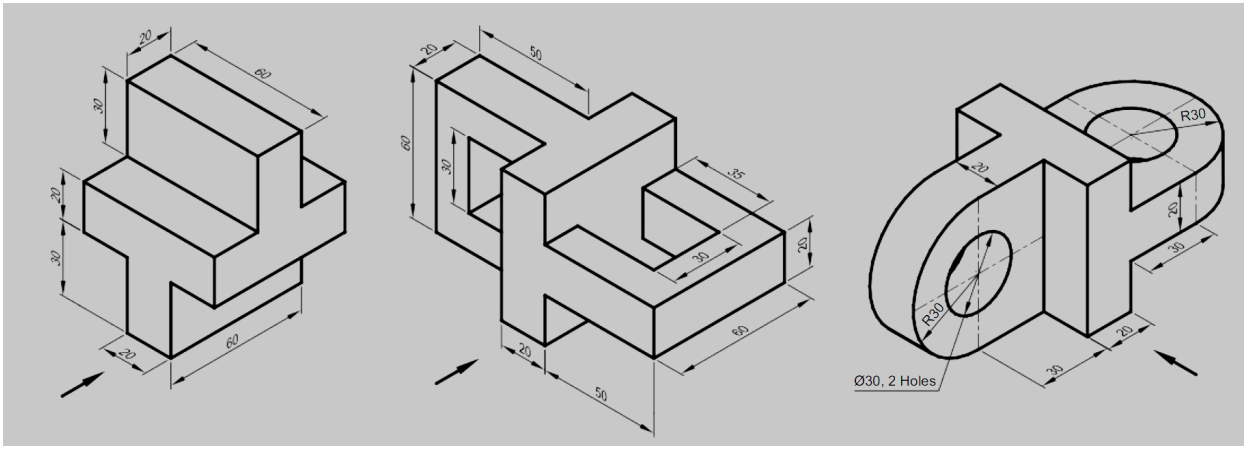
Ø30, 2 Holes
R30

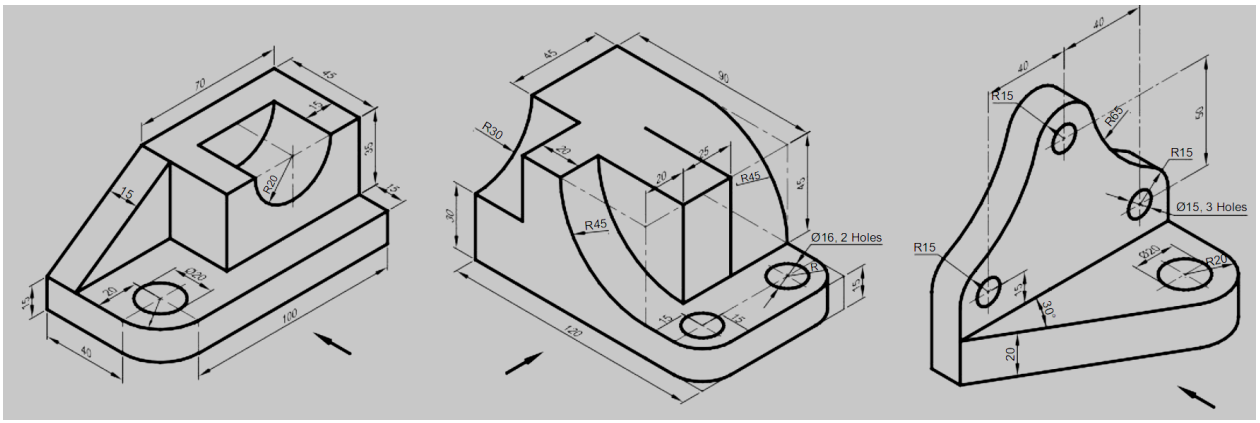
R30
R45
Ø16, 2 Holes
R15
Ø15, 3 Holes

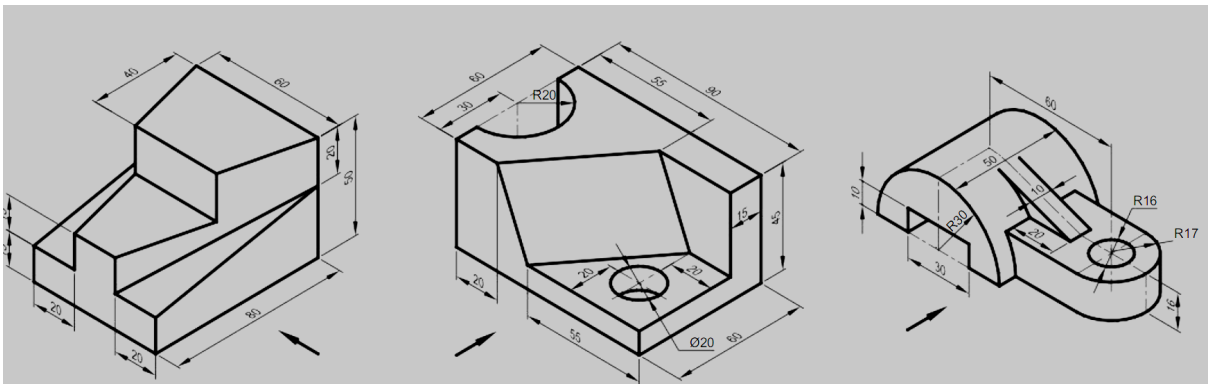
R20
Ø20
R16
R17

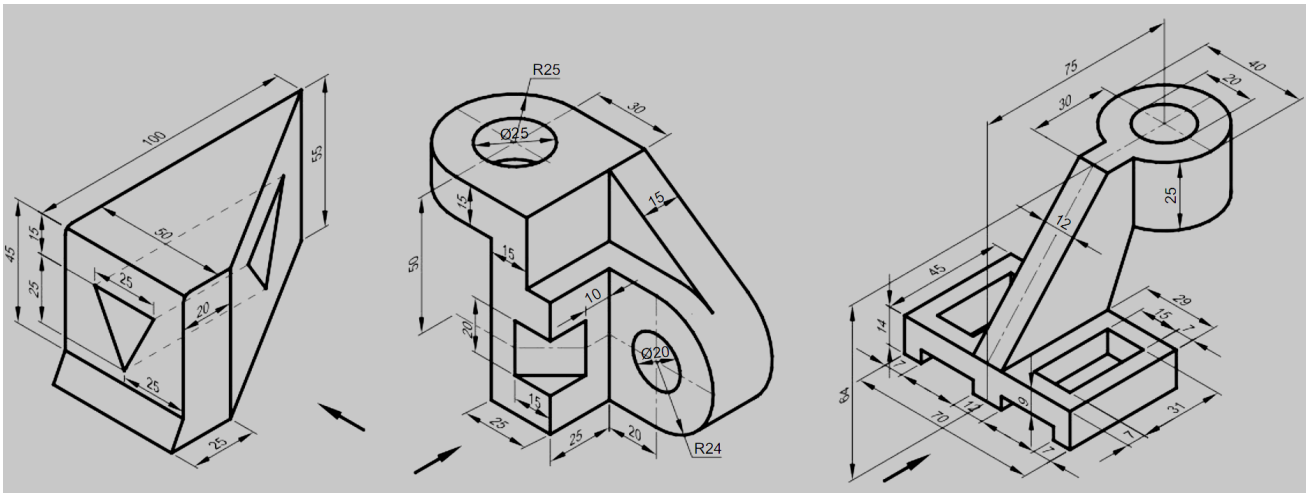
R25
Ø25
Ø20
R24

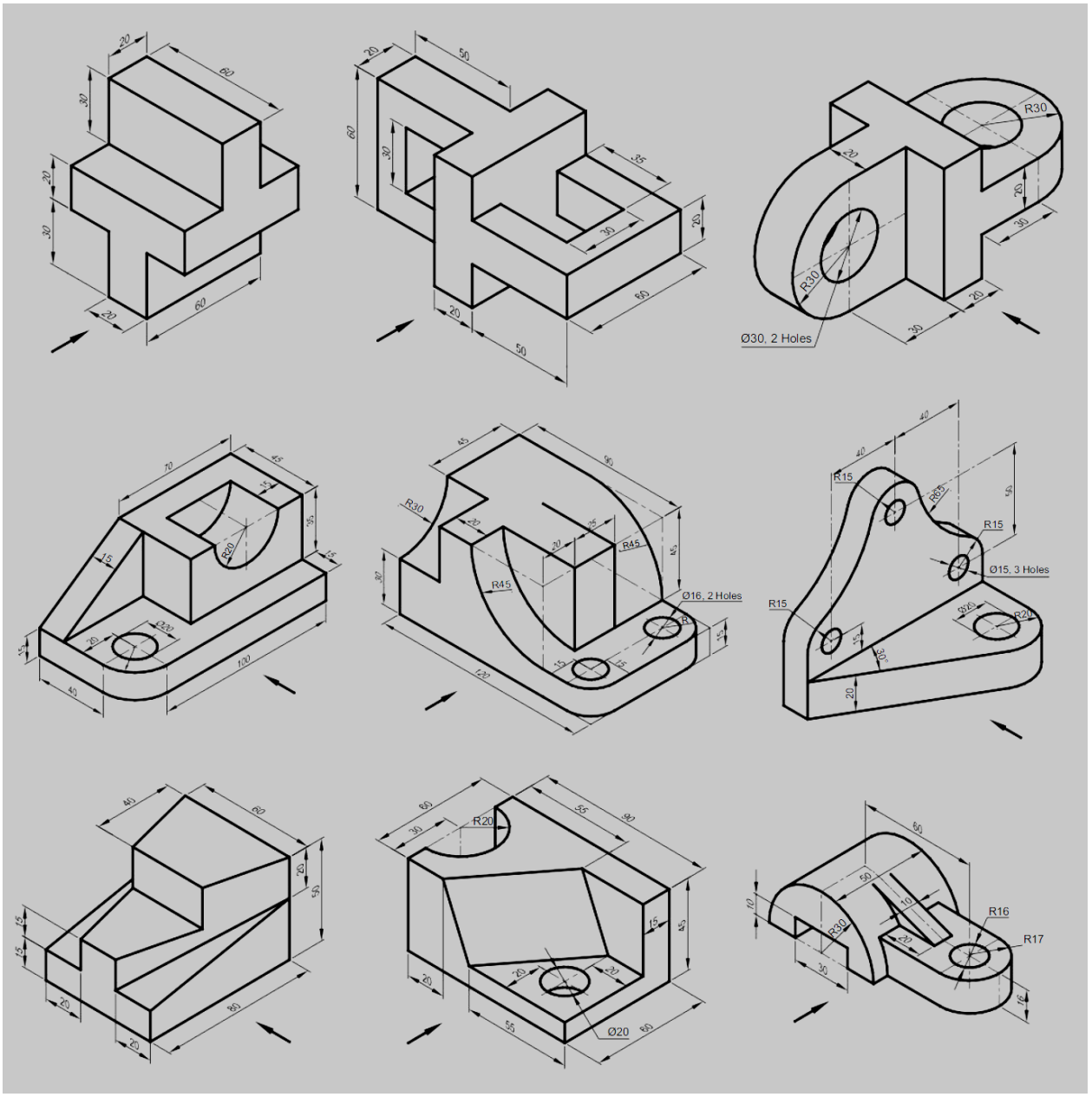
Ø30, 2 Holes
R30
R45
Ø16, 2 Holes
R15
Ø15, 3 Holes
R20
R16
R17

Assignment -1 (Questions, Answer Key, and Scheme of Evaluation):

CO-1

Problem 1: A 100 mm long line PQ has its end point P 30 mm below the H.P. and 20 mm behind the V.P. The V.T. is 10 mm above the H.P. The projectors drawn through its V.T. and the end P are 40 mm apart. Draw the projections of the line. Determine H.T. of the line and inclinations with the reference planes.

Given Data	*Interpretation*
Line PQ is 100 mm long	$p'q_1' = pq_2 = 100$ mm
End P is 30 mm below the H.P.	Point p' is 30 mm below xy
End P is 20 mm behind the V.P.	Point p is 20 mm above xy
V.T. is 10 mm above the H.P.	v' is 10 mm above xy, $vv' = 10$ mm
Projectors through V.T. and end P are 40 mm apart	vv' and pp' are 40 mm apart

Construction Refer to Fig. 9.56.

1. Draw a reference line xy. Mark point p' 30 mm below xy and point p 20 mm above xy.
2. Mark point v on xy at a distance of 40 mm from the projector $p'p$. Mark point v' 10 mm above v to represent the V.T.
3. Join $p'v'$ and pv and determine their true lengths and inclinations with the reference planes. (Draw an arc with centre p and radius pv to meet the horizontal line from p at point v_1. Project v_1 to meet the horizontal line from v' at point v_1'. Join $p'v_1'$. Draw another arc with centre p' and radius $p'v'$ to meet the horizontal line from p' at point v_2'. Project v_2' to meet horizontal line from v at point v_2. Join pv_2.) Here $\theta = 42°$ and $\phi = 19°$.

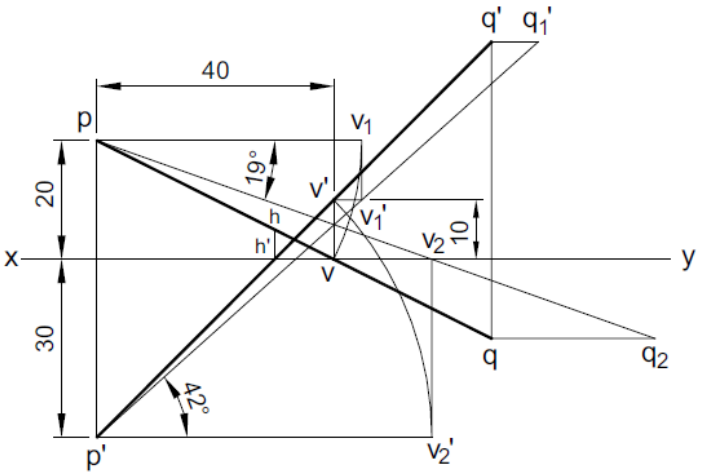

Fig. 9.56

4. Produce $p'v_1'$ to q_1' so that $p'q_1'$ is 100 mm long. Produce $p'v'$ to meet the horizontal line from q_1' at point q'. Join $p'q'$ to represent the front view.
5. Produce pv_2 to q_2 so that pq_2 is 100 mm long. Produce pv to meet the horizontal line from q_2 at point q. Join pq to represent the top view.
6. Line $p'q'$ meets xy at point h'. Project h' to meet pq at point h. Point h represents the H.T.

Result H.T. (h) is 5 mm above xy. Inclination with the H.P., $\theta = 42°$. Inclination with the V.P., $\phi = 19°$.

Scheme of Valuation

Locating the points and drawing true length of the line – 4 marks
Finding projections by any method – 6 marks
Finding length of elevation and plan – 2 marks
Finding apparent inclinations – 2 marks
Locating horizontal trace – 2 marks
Locating vertical trace – 2 marks
Dimensioning and neatness – 2 marks

CO-2

Problem 2: A frustum of a pentagonal pyramid of base edge 40 mm, top edge 20 mm and axis 60 mm is resting on its face on the H.P. Draw its projections when an edge of its base is parallel to the V.P. and the small base is towards the observer

Construction Refer to Fig. 11.50.

1. **First stage** Draw two concentric pentagons *abcdef* and 12345 keeping *cd* perpendicular to *xy*. Join *a*1, *b*2, *c*3, *d*4 and *e*5. This is the top view. Project the corners and obtain *a′c′*3′1′ as the front view.
2. **Second stage** Reproduce the front view of the first stage keeping *c′d′*4′3′ on *xy*. Obtain *a*, *b*, *c*, *d*, *e*, 1, 2, 3, 4 and 5 in the top view as the intersecting points of the projectors from the front view of the second stage with the corresponding locus lines from the top view of the first stage. Join the points and obtain *bcde*512 as the top view.

3. **Third stage** Reproduce the top view of the second stage keeping *cd* parallel and nearer to *xy*. Thus, the base 12345 is nearer to the observer. Obtain *a′*, *b′*, *c′*, *d′*, *e′*, 1′, 2′, 3′, 4′ and 5′ in the front view as the intersecting points of the projectors from the top view of the third stage with the corresponding locus lines from the front view of the second stage. Join the points and obtain *a′b′c′d′e′* as the required front view.

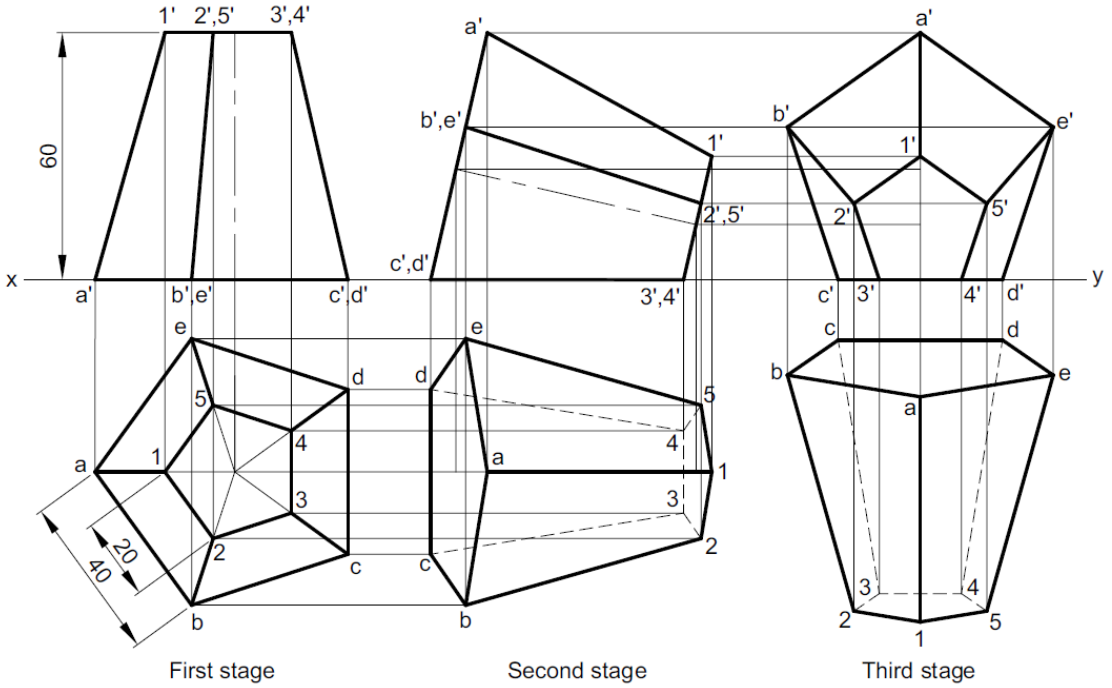

Scheme of Valuation
Stage-1–4 marks,
Stage-2– 6 marks,
Stage -3– 7 marks,
Dimensions & Neatness – 3 marks

CO-3

Problem 3 : A cone of base diameter 50 mm and axis 60 mm is resting on its base on the H.P. It is cut by an A.I.P. inclined at 45° to the H.P. and passing through a point on the axis, 20 mm above the base. Draw its sectional top view and obtain true shape of the section.

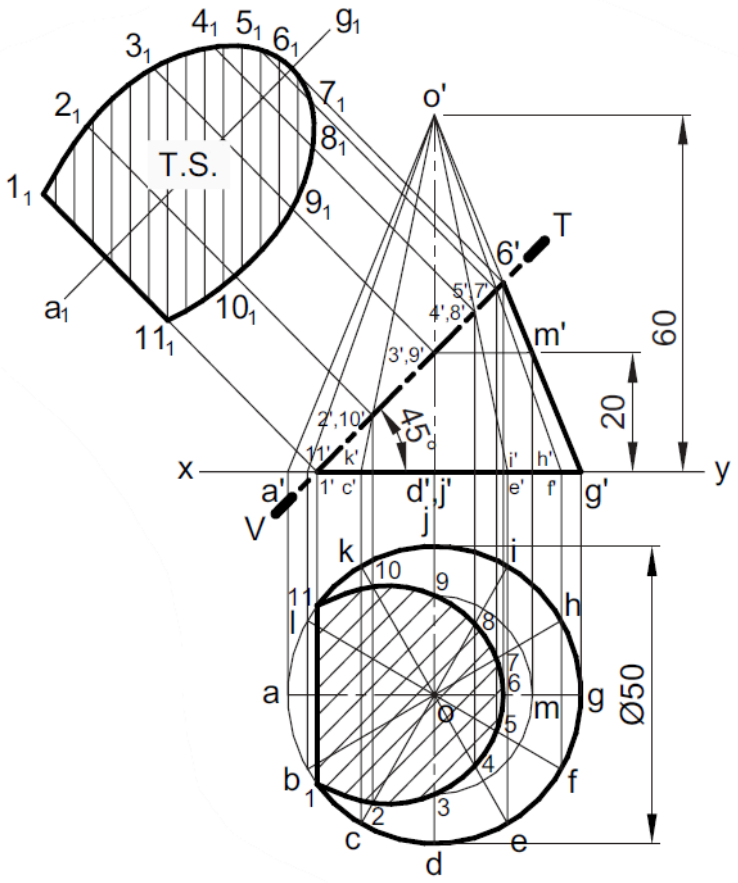

Scheme of Valuation

Drawing initial position plan and elevation – 2 marks
Locating section plane as per given condition – 3 marks
Drawing true shape -3 marks
Dimensioning and neatness –2 marks

Assignment -2 (Questions & Answer Key):

CO-3

Problem 1: A pentagonal pyramid of base side 30 mm and axis 60 mm has its base on the ground. An edge of the base is nearer and parallel to the V.P. A thread is wound around its slant faces starting at the farthest corner of the base from the V.P. and back to it. Find geometrically the shortest length of the thread required and show the projections of the shortest length of the thread in the front and top views of the pyramid.

Construction Refer to Fig.

1. Draw a pentagon *abcde* keeping *de* parallel to *xy*. Join the corners with centroid *o*. This represents the top view. Project all the corners to obtain *a′o′c′* as the front view.
2. Draw an arc *bh* with centre *o* and radius *ob* to meet the horizontal line through centre *o* at point *h*. Project *h* to meet *xy* at point *h′*. Join *o′h′* to represent the true length of the slant edges.
3. Consider seam at *o′a′*. Draw line *OA* parallel and equal to *o′h′*. Draw an arc with centre *O* and radius *OA*. Step off a distance of 30 mm on the arc to obtain *B*, *C*, *D*, *E* and *A*. Join the base sides *AB*, *BC*, *CD*, *DE*, *EA* and slant edges *OA*, *OB*, *OC*, *OD*, *OE*, *OA*.
4. Join *A*-*A* on the development to represent the shortest length of thread. Here it is 120 mm long. Let the line meets *OB*, *OC*, *OD* and *OE* at points *P*, *Q*, *R* and *S*.
5. Draw arcs with centre *O* and radii *OP*, *OQ*, *OR* and *OS* to meet *OA* at points *p″* and *q″*. Draw horizontal lines from *p″* and *q″* to meet their corresponding generators at points *p′*, *q′*, *r′* and *s′*.
6. Join *a′p′q′r′s′a′* to represent the shortest length of thread in the front view. It may be noted that only *a′p′* and *a′s′* are visible and to be drawn with wide continuous lines. The line joining *p′q′r′s′* should be drawn as hidden lines.
7. Project *p′*, *q′*, *r′* and *s′* to meet *ob*, *oc*, *od* and *oe* at points *p*, *q*, *r* and *s*. Join *apqrsa* to represent the shortest length of thread in the top view.

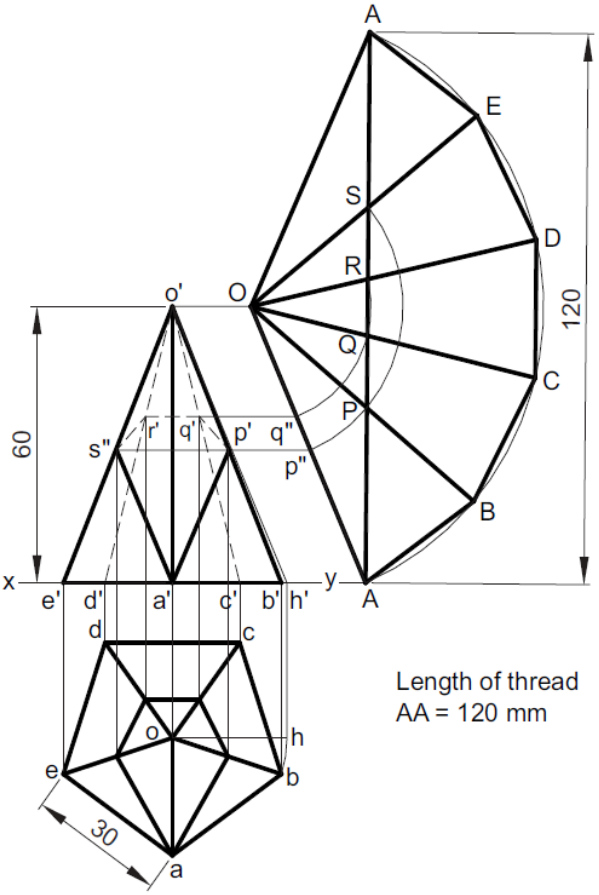

Fig.

Scheme of Valuation

Drawing initial position plan and elevation – 2 marks
De Locating string in development -2 marks
Locating string in elevation – 2 marks
Locating string in plan – 2 marks
Dimensioning and neatness – 2 marks

CO-4

Problem 2: A sphere of 50 mm diameter is cut by a section plane at a distance 15 mm from its centre. It is surmounted over the frustum of a square pyramid of base side 60 mm, top side 40 mm and height 40 mm. Draw the isometric view of the arrangement.

Scheme of Valuation

Drawing initial positions – 4 marks
Isometric View of Frustum – 8 marks
Isometric View of the cut sphere -8 marks
Dimensioning and neatness – 2 marks

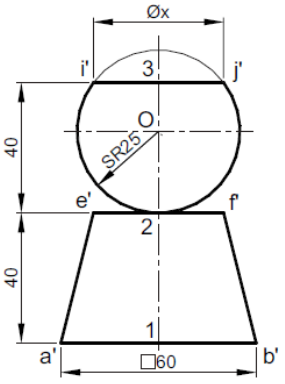

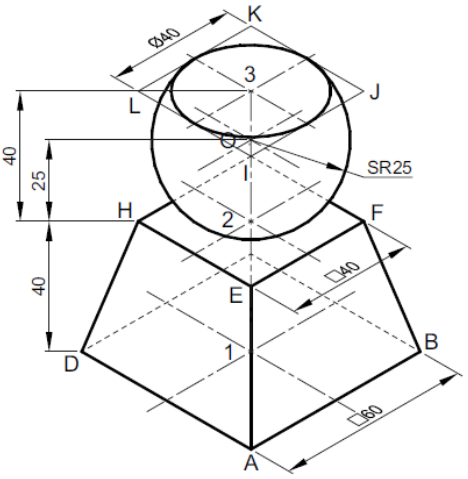

CO-5

Problem 3: A square pyramid of base side 40 mm and axis 60 mm rests on the GP with an edge of the base parallel to and 15 mm behind the PP. The station point is 90 mm above the GP and 75 mm in front of the PP and lies in a CP which is 40 mm towards the right of the axis of the pyramid. Draw its perspective projection.

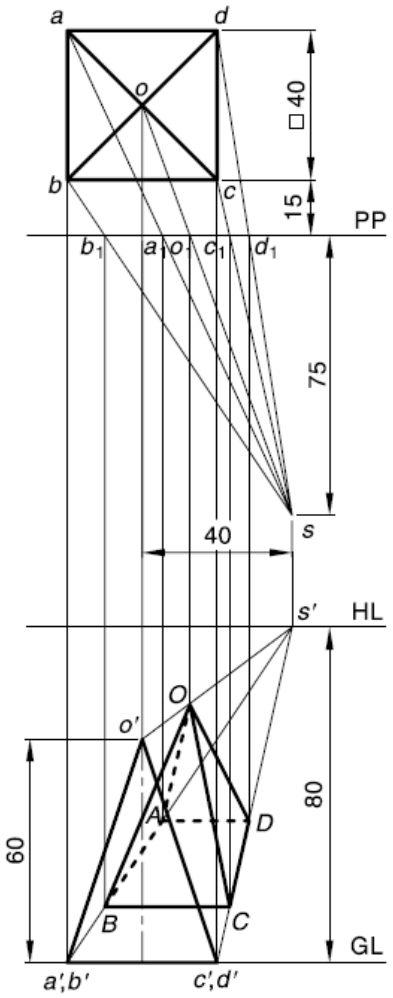

Scheme of Valuation

Drawing the planes and locating the station point – 2 marks
Locating elevation points – 1 marks
Locating plan points – 1 marks
Drawing the perspective view – 5 marks
Dimensioning and neatness – 1 marks

Problem 4: Pictorial view of an object is shown in Fig.. Using first angle projection, draw its (a) front view, (b) top view and (c) right-hand side view.

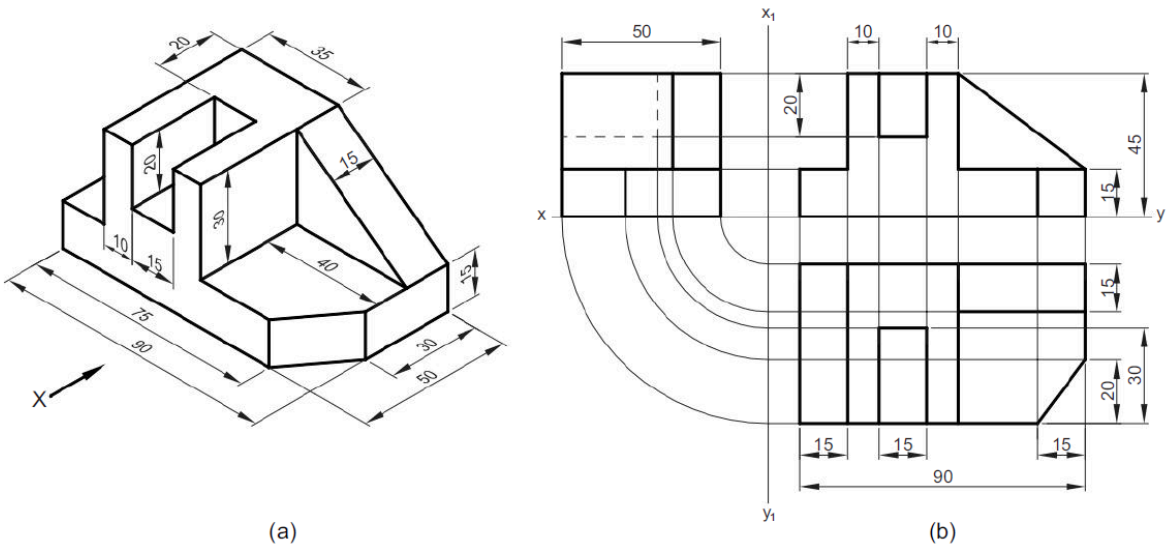

Fig. 7.23 **(a)** *Pictorial view* **(b)** *Orthographic views*

Drawing the elevation – 4 marks
Drawing the plan – 2 marks
Drawing the side view – 2 marks
Marking invisible edges – 1 marks
Dimensioning and neatness – 1 marks

Introduction to AutoCAD

AutoCAD is legendary software in the world of Computer Aided Designing (CAD).

AutoCAD user interface

The drawing file consists of a drawing window, ribbon, menu bar, toolbars, command line, and other screen components, depending on the workspace that you have selected. Note that for the better visibility, we have changed its color which will be discussed further in this chapter.

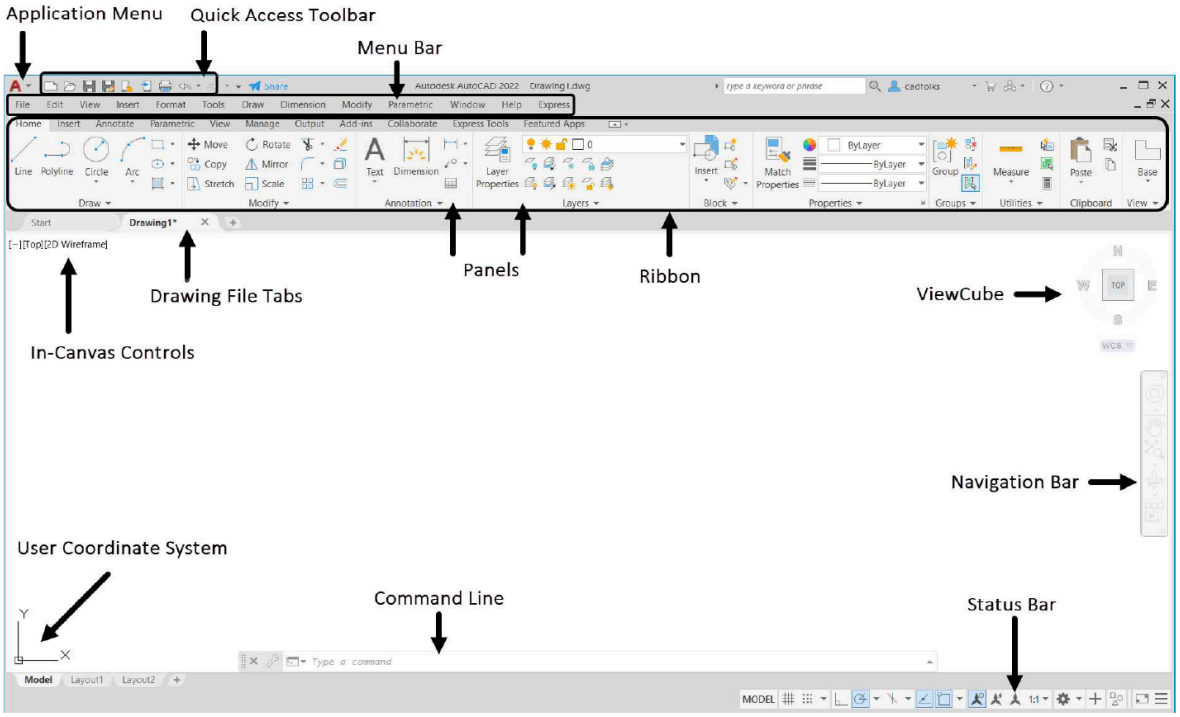

Drafting & Annotation Workspace

This workspace has all the tools to create a 2D drawing. It has a ribbon located at the top of the screen. The ribbon is arranged in a hierarchy of tabs, panels, and tools. Panels such as Draw, Modify, and Layers consist of tools which are grouped based on their usage. Panels in turn are grouped into various tabs. For example, the panels such as Draw, Modify, are Layers are located in the Home tab.

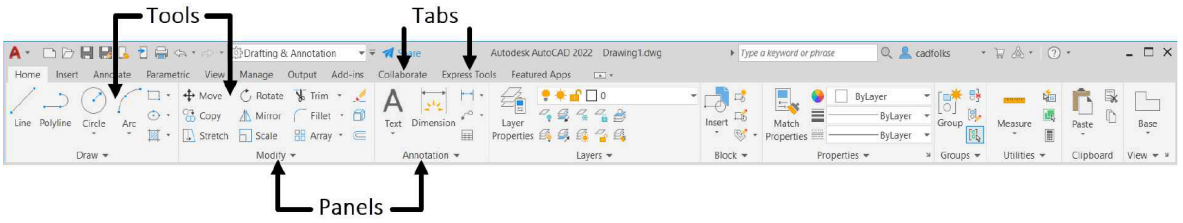

Quick Access Toolbar



File tabs

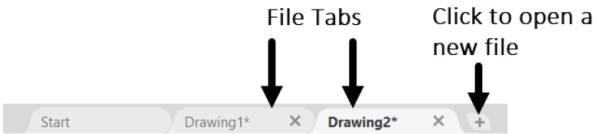

ViewCube
The ViewCube allows you to navigate in the 3D Modeling and 2D drafting environments. Using the ViewCube, you can set the orientation of the model. For example, you can select the top face of the ViewCube to set the orientation to Top. You can click the corner points to set the view to Isometric



Navigation Bar

The Navigation Bar contains navigation tools such as Steering wheel, Pan, Zoom, Orbit, and ShowMotion

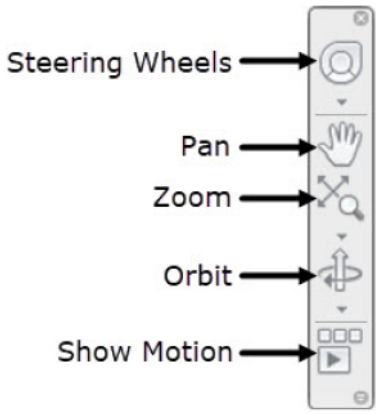

Command line

The command line is located below the drawing window. It is very easy to execute a command using the command line. You can just type the first letter of a command and it lists all the commands starting with that letter. This makes you to invoke commands very easily and increases your productivity.

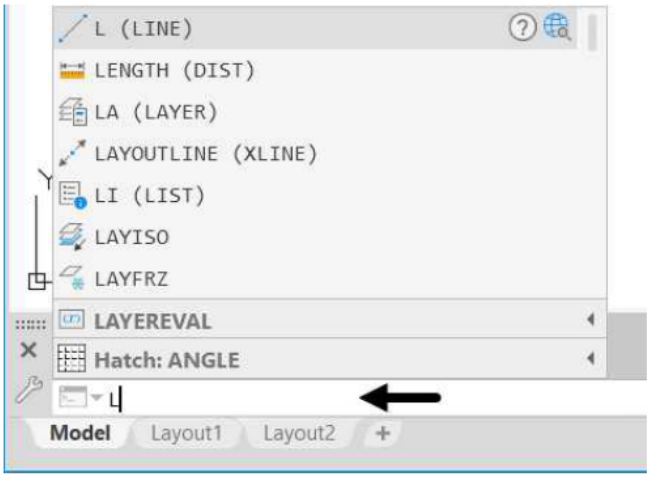

Also, the command line displays the current state of the drawing. It displays various prompts while working with any command. These prompts are series of steps needed to successfully execute a command. For example, when you invoke the LINE command, the command line displays a prompt, "Specify the first point". You need to click in the drawing window to specify the first point of the line. After specifying the first point, the prompt, "Specify next point or [Undo]:" appears. Now, you need to specify the next point of the line. It is recommended that you should always have a look at the command line to know the next step while executing a command.

Status Bar

Status Bar is located at the bottom of the AutoCAD window. It contains many buttons which help you to create a drawing very easily. You can turn ON or OFF these buttons just by clicking on them. Some important ones and their use are listed blow



Button	Description
Coordinates 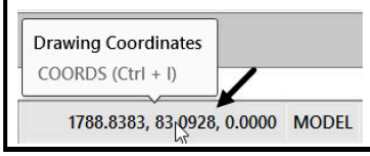	By default, this button is hidden. You can make it visible by selecting it from the **Customization** menu. It displays the drawing coordinates when you move the pointer in the graphics window. You can turn **OFF** this button by clicking over it.
 Grid Display (F7)	It is used to turn the Grid display **ON** or **OFF**. You can set the spacing between the grid lines by right clicking on this button and selecting the **Settings** option. You can use grid lines along with the Snap Mode to draw objects easily and accurately.
 Snap Mode (F9)	The Snap mode forces the cursor to align only with the Grid points. When you turn **ON** this button, the cursor will be able to select only the Grid points.

Ortho Mode (F8)	It is used to turn the Ortho Mode **ON** or **OFF**. When the Ortho Mode is **ON**, only horizontal or vertical lines can be drawn.
Polar Tracking (F10)	This button is used to turn **ON** or **OFF** the Polar Tracking. When the Polar Tracking is turned **ON**, you can draw lines easily at regular angular increments, such as **5**, **10**, **15**, **18**, **23**, **30**, **45**, or **90** degrees. You will notice that a trace line is displayed when the cursor is at a particular angular increment. You can set the angular increment by right-clicking on this button and selecting the required angle. 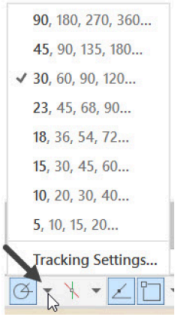 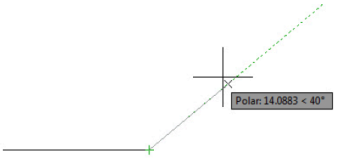
Isometric Drafting (F8)	This button is used to switch between planes while drawing isometric views. 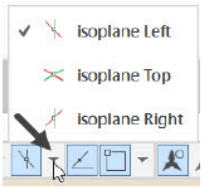
Object Snap Tracking (F11)	This button is used to turn **ON** or **OFF** the Object Snap Tracking mode. When this mode is turned **ON**, you can easily select points by using the trace lines originating from the key points. 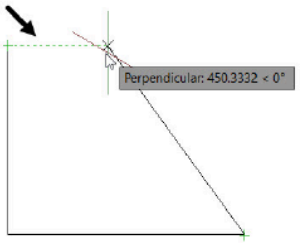
Object Snap (F3)	This button is used to turn ON or OFF the Object Snap mode. When this mode is turned ON, you can easily select the key points of objects such as endpoints, midpoint, and center point and so on. 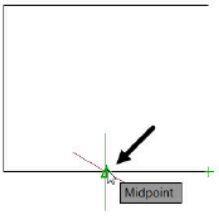 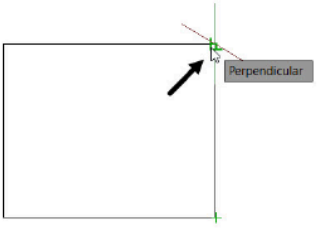



Show/Hide Lineweight

This button is used to turn **ON** or **OFF** the lineweight. Line weight is the thickness of objects. You can set the thickness of objects by specifying the lineweight. If the Lineweight is turned **OFF**, the objects are displayed with the default thickness.



Lineweight OFF Lineweight ON



Dynamic Input (F12)

This button is used to turn **ON** or **OFF** the Dynamic Input mode. When this mode is turned **ON**, a dynamic input box is attached to the cursor along with a prompt. You can directly enter a value in the dynamic input box. You can use Dynamic Input in place of command line.

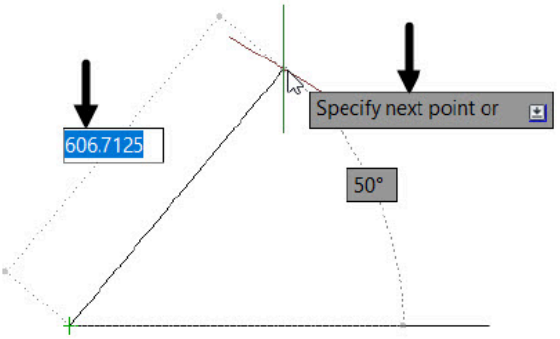

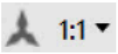

Annotation Scale

This button is used to control the size of annotative objects. Annotative objects are dimensions, texts, notes and other objects which can be sized as per the drawing scale.

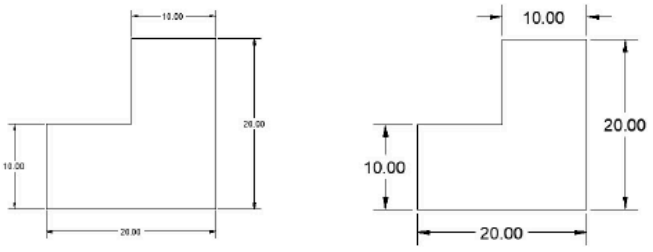

Scale 1:1 Scale 2:1

Basic tools in AutoCAD

Draw Panel

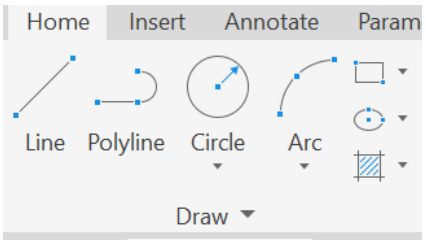

Contains basic tools tools include Line, Circle, Polyline, and Rectangle and so on and they are available in the Draw panel of the Home tab in the ribbon, as shown below.

Modify Panel

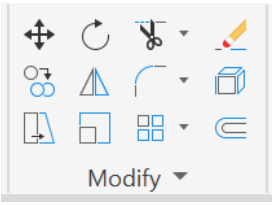

These panels used to modify the drawing that are drawn using the draw panels. It includes tools for Move, Copy, Rotate, Mirror, Erase, Trim/extend, fillet Scale, offset, Stretch, Arrays etc.

Annotation Panel

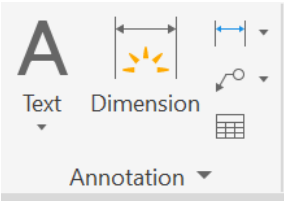

The tools in this panels used to for creating text/ notes, dimensions, Tables of the drawing you make for the drawing you make.
You can also invoke these tools by typing them in the command line, as shown.

Command List

Command	Alias	Description
ARC	A	Used to create an arc.
CIRCLE	C	Used to create a circle.
COPY	CO	Used to copy objects inside a drawing
DIMSTYLE	D	Used to create or modify a dimension style
OSNAP	OS	Used to set Object Snap settings
DDPTYPE	Used to set the point style and size.	DDPTYPE
DIMSTYLE	DIMSTY	Update a dimension according the dimension style.

DIMEDIT	DIMED	Used to edit a dimension.
DIMTEDIT	DIMTED	Used to edit the dimension text.
DIST (DI)	DI	Used to measure the distance between two points.
DIVIDE	DIV	Places evenly spaced objects on a line segment
ELLIPSE	EL	Used to create an ellipse.
ERASE	E	Used to erase objects.
EXPLODE	X	Used to explode or ungroup objects
EXTEND	EX	Used to extend an object upto another.
FILLET	F	Used to create a fillet at the corner
HATCH	H	Used to apply hatch to a closed area.
JOIN	J	Used to joins end points of two linear or curved objects
LAYER	LA	Used to create a new layer and modify its properties
LINE	L	Used to create a line.
LINETYPE	LT	Used to set the linetype.
LIST	LI	Lists the properties of a selected object in the text window.
LTSCALE	LTS	Used to set the linetype scale.
MIRROR	MI	Used to create a mirror image of an object.
MOVE	M	Used to move selected objects.
MTEXT	MT or T	Used to write text in multiple lines.
OFFSET	O	Creates a parallel copy of a selected object at a specified distance.

OPTIONS	OP	Used to set various options related to the drawing
ORTHO		Turns ON/OFF the Ortho Mode.
OSNAP	OS	Used to the Object Snap settings.
PLINE	PL	Used to create a polyline. A polyline is a single object which can have continuous lines and arcs.
PLOT	CTRL+P	Used to plot a drawing.
POINT	PO	Used to place a point in the drawing.
POLYGON	POL	Used to create a polygon.
SCALE	SC	Used to increase or decrease the size of a drawing.
STRETCH	S	Used to stretch objects
TRIM	TR	Used to trim unwanted portions of an object.
UNITS	UN	Set the units of the drawing
XLINE – CREATES A CONSTRUCTION LINE	XL	Used to create construction lines. Construction lines extend to infinity and help in drawing objects
XREF	XR	Used to attach a drawing as an external reference.
ZOOM	Z	Used to Zoom in or out of a drawing.

Layer Panel

Layers are like a group of transparent sheets that are combined into a complete drawing. The figure below displays a drawing consisting of object lines and dimension lines. In this example, the object lines are created on the ‘Object’ layer, and dimensions are created on the layer called ‘Dimension’. You can easily turn-off the ‘Dimension’ layer for a clearer view of the object lines.

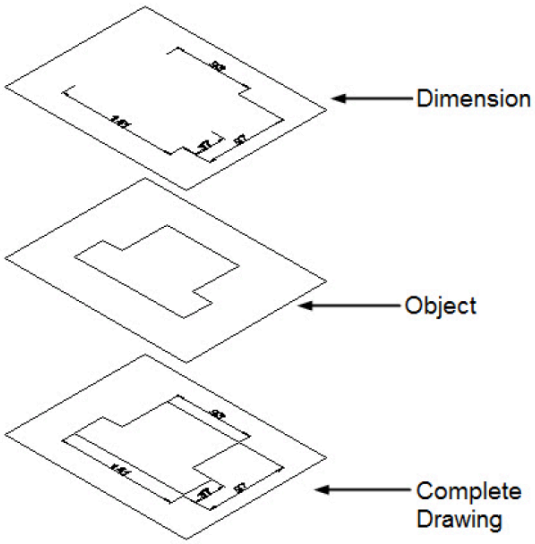

Layer Properties Manager

The Layer Properties Manager is used to create and manage layers. To open Layer Properties Manager, click Home > Layers > Layer Properties on the ribbon or enter LA in the command line.

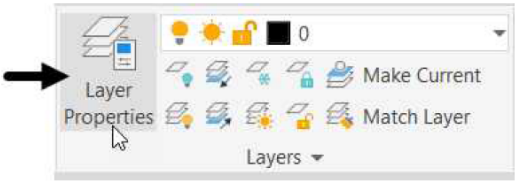

The components of the Layer Properties Manager are shown below. The Tree View section is used for displaying layer filters, group, or state information. The List View section is the main body of the Layer Properties Manager. It lists the individual layers that currently exist in the drawing.

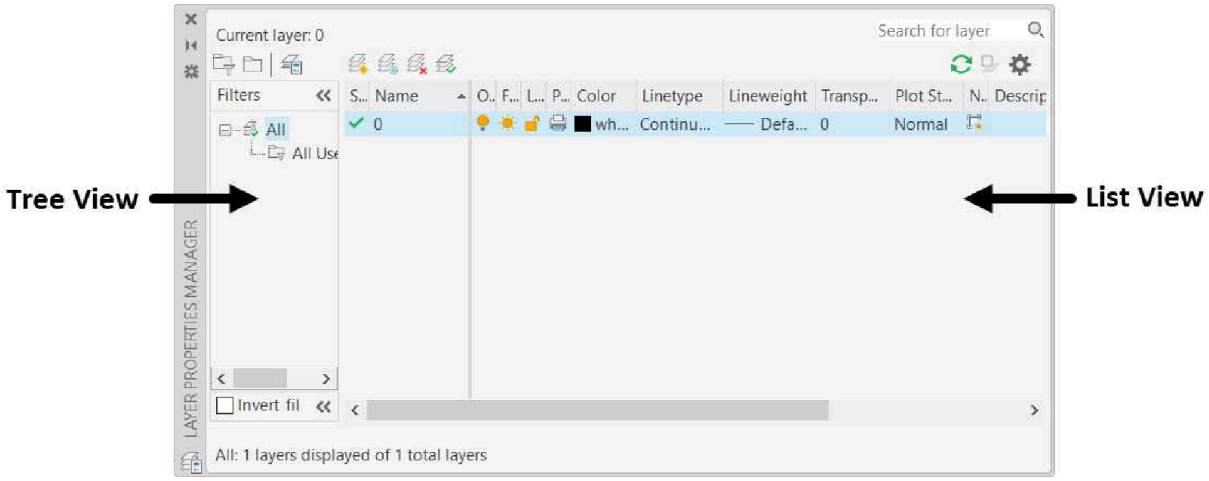

The List View section contains various properties. You can set layer properties and perform various operations in the List View section. A brief explanation of each layer property is given below.

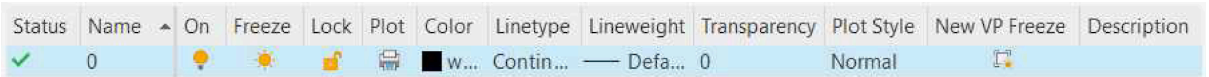

Status –Shows a green check when a layer is set to current.
Name - Shows the name of the layer.
On – Used to turn on/off the visibility of a layer. When a layer is turned on, it shows a yellow **light**-bulb. When you turn off a layer, it shows a grey light-bulb.

Freeze/Thaw – It is used to freeze the objects of a layer so that they cannot be modified. Also, the visibility of the object is turned off.
Lock/Unlock- It is used to lock the layer so that the objects on it cannot be modified.
Color – It is used to assign a color to the layer.
Linetype – It is used to assign a linetype to the layer.
Lineweight – It is used to set a lineweight(thickness) to the layer.
Transparency – It is used to set transparency to a layer. You set a transparency level from 0 to 90 for all objects on a layer.
Plot Style – It is used to override the settings such as color, linetype, and lineweight while plotting a drawing.
Plot – It is used to control which layer will be plotted.
New VP Freeze – It is used to create and freeze a layer in any new viewport.
Description – It is used to enter a detailed description about the layer.

Creating a New Layer
You can create a new layer by using anyone of the following methods:
• Click the New Layer button on the Layer Properties Manager; a new layer with the name 'Layer1' appears in Name field. Next, you can enter the required name of the layer in the Name field.



• Right-click in the Name field and select New Layer from the shortcut menu.
• If you want to continue to create layers after creating one layer, then press ENTER or comma (,).
Making a layer current

If you want to draw objects on a particular layer, then you have to make it current. You can make a layer current using the methods listed below.
• Select the layer from the List view and click the Set Current button on the Layer Properties Manager.



• Double-click on the Name field of the layer.
• Right-click on the layer and select Set current.
• Select the layer from the Layer drop-down of the Layer panel, as shown.
• Click the Make Current button on the Layers panel, as shown. Next, select an object; the layer related to the selected object will become current.

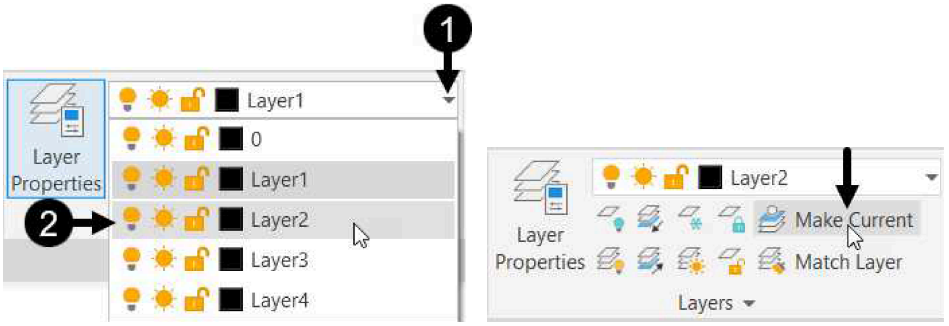

Deleting a Layer

You can delete a layer by using anyone of the following methods:
• Click the Delete Layer button or press ALT+D.



• Right-click in the Name field and select Delete Layer from the shortcut menu.

Assignment -1 (Questions, Answer Key, and Scheme of Evaluation):

CO-1

Problem 1: A 100 mm long line PQ has its end point P 30 mm below the H.P. and 20 mm behind the V.P. The V.T. is 10 mm above the H.P. The projectors drawn through its V.T. and the end P are 40 mm apart. Draw the projections of the line. Determine H.T. of the line and inclinations with the reference planes.

Given Data	*Interpretation*
Line PQ is 100 mm long	$p'q_1' = pq_2 = 100$ mm
End P is 30 mm below the H.P.	Point p' is 30 mm below xy
End P is 20 mm behind the V.P.	Point p is 20 mm above xy
V.T. is 10 mm above the H.P.	v' is 10 mm above xy, $vv' = 10$ mm
Projectors through V.T. and end P are 40 mm apart	vv' and pp' are 40 mm apart

Construction Refer to Fig. 9.56.

1. Draw a reference line xy. Mark point p' 30 mm below xy and point p 20 mm above xy.
2. Mark point v on xy at a distance of 40 mm from the projector $p'p$. Mark point v' 10 mm above v to represent the V.T.
3. Join $p'v'$ and pv and determine their true lengths and inclinations with the reference planes. (Draw an arc with centre p and radius pv to meet the horizontal line from p at point v_1. Project v_1 to meet the horizontal line from v' at point v_1'. Join $p'v_1'$. Draw another arc with centre p' and radius $p'v'$ to meet the horizontal line from p' at point v_2'. Project v_2' to meet horizontal line from v at point v_2. Join pv_2.) Here $\theta = 42°$ and $\phi = 19°$.

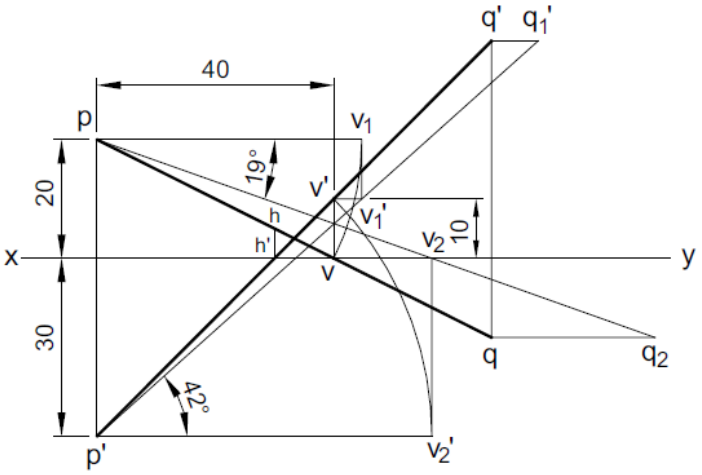

Fig. 9.56

4. Produce $p'v_1'$ to q_1' so that $p'q_1'$ is 100 mm long. Produce $p'v'$ to meet the horizontal line from q_1' at point q'. Join $p'q'$ to represent the front view.
5. Produce pv_2 to q_2 so that pq_2 is 100 mm long. Produce pv to meet the horizontal line from q_2 at point q. Join pq to represent the top view.
6. Line $p'q'$ meets xy at point h'. Project h' to meet pq at point h. Point h represents the H.T.

Result H.T. (h) is 5 mm above xy. Inclination with the H.P., $\theta = 42°$. Inclination with the V.P., $\phi = 19°$.

Scheme of Valuation

Locating the points and drawing true length of the line – 4 marks
Finding projections by any method – 6 marks
Finding length of elevation and plan – 2 marks
Finding apparent inclinations – 2 marks
Locating horizontal trace – 2 marks
Locating vertical trace – 2 marks
Dimensioning and neatness – 2 marks

CO-2

Problem 2: A frustum of a pentagonal pyramid of base edge 40 mm, top edge 20 mm and axis 60 mm is resting on its face on the H.P. Draw its projections when an edge of its base is parallel to the V.P. and the small base is towards the observer

Construction Refer to Fig. 11.50.

1. **First stage** Draw two concentric pentagons *abcdef* and 12345 keeping *cd* perpendicular to *xy*. Join *a*1, *b*2, *c*3, *d*4 and *e*5. This is the top view. Project the corners and obtain *a′c′*3′1′ as the front view.
2. **Second stage** Reproduce the front view of the first stage keeping *c′d′*4′3′ on *xy*. Obtain *a*, *b*, *c*, *d*, *e*, 1, 2, 3, 4 and 5 in the top view as the intersecting points of the projectors from the front view of the second stage with the corresponding locus lines from the top view of the first stage. Join the points and obtain *bcde*512 as the top view.

3. **Third stage** Reproduce the top view of the second stage keeping *cd* parallel and nearer to *xy*. Thus, the base 12345 is nearer to the observer. Obtain *a′*, *b′*, *c′*, *d′*, *e′*, 1′, 2′, 3′, 4′ and 5′ in the front view as the intersecting points of the projectors from the top view of the third stage with the corresponding locus lines from the front view of the second stage. Join the points and obtain *a′b′c′d′e′* as the required front view.

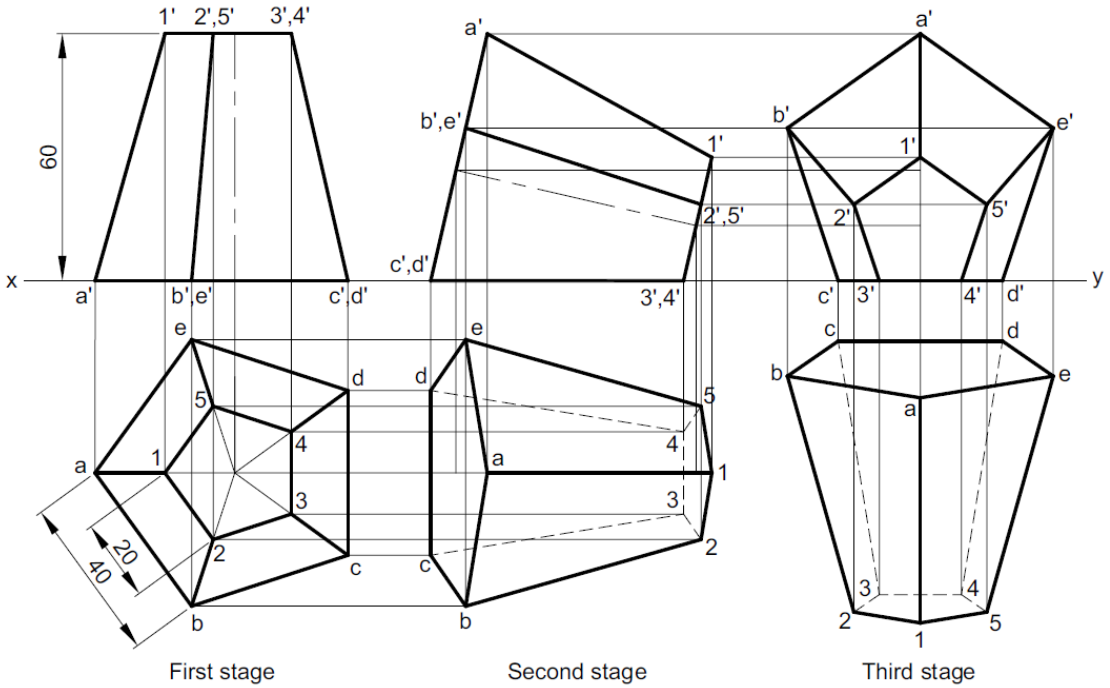

Scheme of Valuation
Stage-1–4 marks,
Stage-2– 6 marks,
Stage -3– 7 marks,
Dimensions & Neatness – 3 marks

CO-3

Problem 3: A square pyramid of base side 40 mm and axis 60 mm is resting on its base on the H.P. such that all the sides of the base are equally inclined to the V.P. It is cut by a section plane

perpendicular to the V.P. and inclined at 60° to the H.P., bisecting the axis. Draw the development of its lateral surface.

Construction Refer to Fig. 13.20.

1. Draw a square *abcd* keeping *ab* inclined at 45° to *xy*. Also, draw the diagonal lines of the square. This represents the top view. Project all the corners to obtain *a′o′c′* as the front view.
2. Draw V.T. of the cutting plane inclined at 60° to *xy* such that it passes through mid-point of the axis. Let V.T. cut *a′b′* and *a′d′* at *p′*, *o′b′* and *o′d′* at *q′*, *o′c′* at *r′*.
3. Consider seam at *o′a′*. Draw a line *OA* parallel and equal to *o′c′*. Draw an arc with centre *O* and radius *OA*. Step off a distance of 40 mm on the arc to obtain *B*, *C*, *D* and *A*. Thus, *AB* = *BC* = *CD* = *DA* = 40 mm. Join the base sides *AB*, *BC*, *CD*, *DA* and slant edges *OA*, *OB*, *OC*, *OD*, *OA*.
4. Draw the horizontal lines from points *q′* and *r′* to meet line *OA* in the development at points *q″* and *r″*, respectively. Draw arcs with centre *O* and radii *Oq″* and *Or″* to meet the corresponding generators at points *Q* and *R*, respectively.
5. Project point *p′* to meet the square in the top view at point *p*. Locate point *P* in the development such that *AP* = *ap*.
6. Join *PQRQP* with straight lines. Darken the portion of the development that is retained after truncating the cone.

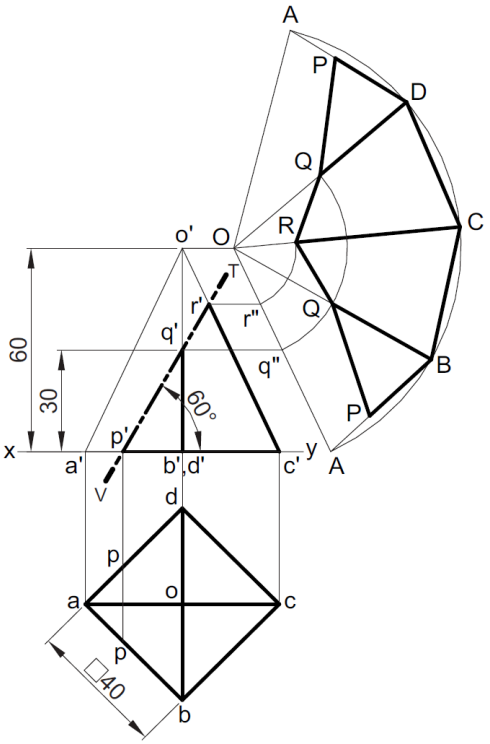

Scheme of Valuation

Drawing initial position plan and elevation – 3 marks
Development of the lateral surface - 5
Dimensioning and neatness – 2 marks