KLE Technological University
Creating Value
Leveraging Knowledge
B. V. Bhoomaraddi Engineering & Technology College Campus, Hubballi - India

Department of Electrical & Electronics Engineering

V Semester Mini Project

(17EEEW301)

Report on

REGENRATION TECHNIQUE OF BLDC MOTOR FOR CAPCITOR CHARGING

Under the Guidance of

Prof. Kavita Chachadi

Project Associates

PRIYANKA INAMATI	**01FE19BEE050**
SHWETA	**01FE19BEE058**
POOJA V K	**01FE19BEE061**
NIKITHA N BANAKAR	**01FE19BEE064**

Academic Year 2021-22

KLE Technological University
Creating Value
Leveraging Knowledge
B. V. Bhoomaraddi Engineering & Technology College Campus, Hubballi - India

Department of Electrical & Electronics Engineering

CERTIFICATE

This is to certify that the mini project entitled ***"REGENRATION TECHINQUE OF BLDC MOTOR FOR CAPCITOR CHARGING"*** *is a work carried out by,* ***PRIYANKA INAMATI(01FE19BEE050), SHWETA (01FE19BEE058), POOJA V K (01FE19BEE061), NIKITHA BANAKAR(01FE19BEE064)*** *bonafide students of V SEM Semester,* ***Department of EEE, KLE Technological University, Hubballi*** *for the partial fulfillment of the Mini Project assigned for V semester, BE in Electrical & Electronics Engineering. The project report has been approved as it satisfies the academic requirements Specified by the university*

.....	.....	.....
Signature of the Guide	**Signature of the H.O.D**	**Signature of the Registrar**
(Prof. Kavita Chachadi)	**(Dr. A. B. Raju)**	**(Dr. N. H. Ayachit)**

Name of Examiner	**Signature with Date**
1.	
2.	

Acknowledgements

Our report acknowledges some guidance, supervision and a lot of inspiration. It is a time to acknowledge our obligations to all who have extended their cooperation all along our study tenure of project work.

We wish to place on record our profound privilege and deep sense of gratitude to Prof. Kavita Chachadi. N for her wholehearted guidance without which this endeavor would not have been possible. We are also thankful to him for his guidance and support throughout the project work.

Our grateful regards are to Dr. A B Raju, HOD, Department of Electrical and Electronics Engineering for his continual support and inspiration to us, which contributed to the success of our project.

We are deeply grateful to Dr. N H Ayachit, our respected Registrar for having provided us the academic environment which nurtured our practical skills contributing to the success of our project.

Our diction falls short of word to gratify the faculty members of our department for being the primary source of inspiration and strength for our project study.

Lastly with unquantifiable affection we wish to express our sincere feelings to our parents and family members in the form of words which are restrictive in expression and quantum

Project Associates

PRIYANKA INAMATI	01FE19BEE050
SHWETA	01FE19BEE058
POOJA V K	01FE19BEE061

NIKITHA N BANAKAR 01FE19BEE064

Abstract

The working of a BLDC motor in the forward motoring and reverse regeneration mode. It proposes a simple method of braking with energy regeneration for a brushless dc motor. This action is accomplished through the inversion of the signals given by the position sensor. During motor operation, the rotor moves clockwise. When the brake signal is applied, the stator field is reversed 180 electric degrees compared with the presented method. The proposed solution simultaneously achieves dual goals - electric brake and the energy regeneration without using additional converter, ultracapacitor, or complex "winding-changeover technique. Since by braking kinetic energy is converted into the electrical energy and then this energy is stored in the battery. Charging of the battery has been understood by looking into the charging current and voltage waveform of the capacitor connected in parallel to the battery. The BLDC motor is a good choice in the automotive industry owing to its high efficiency, high power density and high speed ranges compared with other motor types, such as the DC motor and the permanent magnet synchronous motor (PMSM). The BLDC motor model with trapezoidal back-EMF generated that is used to charge the battery during regenerative mode of the electric vehicle. Remaining energy can be stored in capacitor without wasting it. Here we have solved the equations of back emf, Torque and speed of BLDC motor using fourth order RK method and based on calculation c-program is written.

Contents

	PAGE NO
Abstract	**4**
1. Introduction	**6-8**
1.1. General Introduction	
2. Literature Survey & Objectives	**9-10**
2.1. Literature Survey	
2.2. Objectives	
3. Methodology	**11-18**
3.1. Block Diagram	
3.2. BLDC Motor specifications	
3.3. Torque Equations	
3.4. Runge-Kutta Numerical method	
3.5. Rotor EMF equations	
3.6. Flow chart	
4. Results and Conclusions	**19-21**
4.1. Results	
4.2. Conclusions	
5. References	**22**

1. Introduction

1.1 General Introduction

Introduction to BLDC motor

Brushless DC motors (BLDC) have been a much-focused area for numerous motor manufacturers as these motors are increasingly the preferred choice in many applications, especially in the field of motor control technology. BLDC motors are superior to brushed DC motors in many ways, such as ability to operate at high speeds, high efficiency, and better heat dissipation.

They are an indispensable part of modern drive technology, most commonly employed for actuating drives, machine tools, electric propulsion, robotics, computer peripherals and also for electrical power generation. With the development of sensorless technology besides digital control, these motors become so effective in terms of total system cost, size and reliability.

Applications of Brushless DC Motors (BLDC)

Brushless DC Motors (BLDC) are used for a wide variety of application requirements such as varying loads, constant loads and positioning applications in the fields of industrial control, automotive, aviation, automation systems, health care equipment's, etc.

Some specific applications of BLDC motors are: -

- Computer hard drives and DVD/CD players.
- Electric vehicles, hybrid vehicles, and electric bicycles.
- Industrial robots, CNC machine tools, and simple belt driven systems.
- Washing machines, compressors and dryers.
- Fans, pumps and blowers.

BLDC motor for Reverse regeneration technique for charging capacitor

It proposes a simple method of braking with energy regeneration for a brushless dc motor. This action is accomplished through the inversion of the signals given by the position sensor. When the brake signal is applied, the stator field is reversed 180 electric degrees compared with the presented method. The proposed solution simultaneously achieves dual goals - electric brake and the energy regeneration without using additional converter, ultra-capacitor, or complex winding-changeover technique. Charging of the battery has been understood by looking into the charging current and voltage waveform of the capacitor connected in parallel to the source.

BLDC Motor Working principle

BLDC motor works on the principle similar to that of a Brushed DC motor. The Lorentz force law which states that whenever a current carrying conductor placed in a magnetic field it experiences a force. As a consequence of reaction force, the magnet will experience an equal and opposite force. In the BLDC motor, the current carrying conductor is stationary and the permanent magnet is moving. When the stator coils get a supply from source, it becomes electromagnet and starts producing the uniform field in the air gap. Though the source of supply is DC, switching makes to generate an AC voltage waveform with trapezoidal shape.

Due to the force of interaction between electromagnet stator and permanent magnet rotor, the rotor continues to rotate. BLDC motors are a type of synchronous motor. This means the magnetic field generated by the stator and the magnetic field generated by the rotor rotates at the same frequency. BLDC motors do not experience the “slip” that is normally seen in induction motors. The stator of BLDC motor consists of stacked steel laminations with windings placed in the slots that are axially cut along the inner periphery.

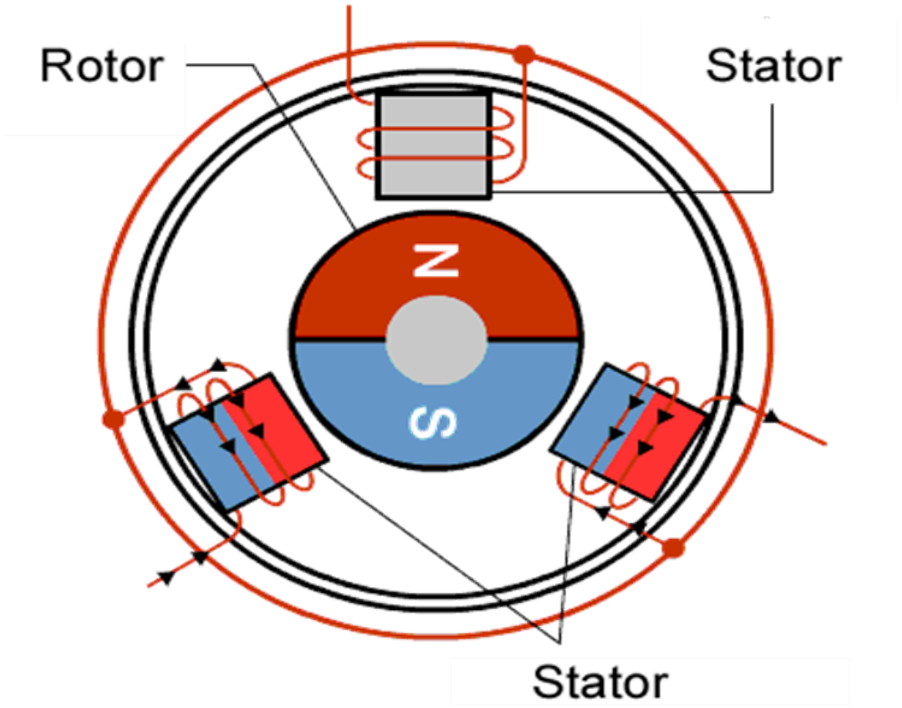

Figure 1.1.1 working principle of BLDC motor

Introduction to regenerative braking:

- It is an energy recovery mechanism which slows a vehicle by converting its kinetic energy into another form, which can be either used immediately or stored until needed.
- This contrasts with conventional braking systems, where the excess kinetic energy is converted to heat by friction in the brake linings and therefore wasted.
- The most common form of regenerative brake involves using an electric motor as an electric generator.
- This system is used in hybrid cars & electric cars, which use motor for rotating wheels.

- Therefore, the motor exerts torque in a direction that is opposite from the rolling direction and hence the vehicle stops and Armature current also reverses.

2. Literature Survey and Objectives

2.1 Literature Survey

SI NO	TITLE OF PUBLICATION	SUMMARY
1	Brushless kv constant explained Learningrc.com (2015-07-29). Retrieved on 2019-12-26.	The motor Kv constant is the reciprocal of the back-emf constant. The typical way to measure Kv is to spin your motor at a known RPM and then measure the voltage generated on the motor leads. So Kv tells us the relationship between motor speed and generated back-emf.
2	"Brushless DC Motor vs. AC Motor vs. Brushed Motor". Retrieved 2021-04-29.	An AC induction motor does not have any magnets on the rotor, instead it has a series of laminations and winding. Alternatively, a BLDC motor replaces the windings on the rotor with a series of permanent magnets. These magnets create a magnetic field that interacts with the stator's field and generates torque.
3	"Brushless DC Motors Used in Industrial Applications". *Ohio Electric Motors. 2012. Archived from* the original *on November 4, 2012.*	Common uses of brushless DC motors in industrial engineering are linear motors, servomotors, actuators for industrial robots,

		extruder drive motors and feed drives for CNC machine tools.
4	Vehicle optimisation for regenerative brake energy maximisation	This paper presents the possible improvements in regenerative braking potential and fuel economy due to application specific design. Fuel economy and efficiency are evaluated and compared for given drive cycles in a flexible simulation architecture containing reduced-order component models.
5	M.T. Von Srbik, R.F. Martinez-Botas, in Sustainable Vehicle Technologies, 2012	This paper presents and compares simulation with measurement results of REGEN efficiency and energy economy. The capabilities of the simulation environment are demonstrated by defining base- vehicle comprising of a power-split powertrain configuration, an internal combustion engine (ICE), a permanent magnet AC Motor and Generator (M/G), a Nickel Metal Hydride (NiMH) battery and a Continuously Variable Transmission (CVT

2.2 Objectives

- To obtain back emf and torque equations by mathematical modelling of BLDC motor using KVL and ordinary differential equations
- Solving the obtained differential equations and integral equations using RK method
- To plot the speed v/s time and EMF v/s time characteristics
- To show trapezoidal EMF of BLDC motor

3. Methodology

3.1 Block Diagram

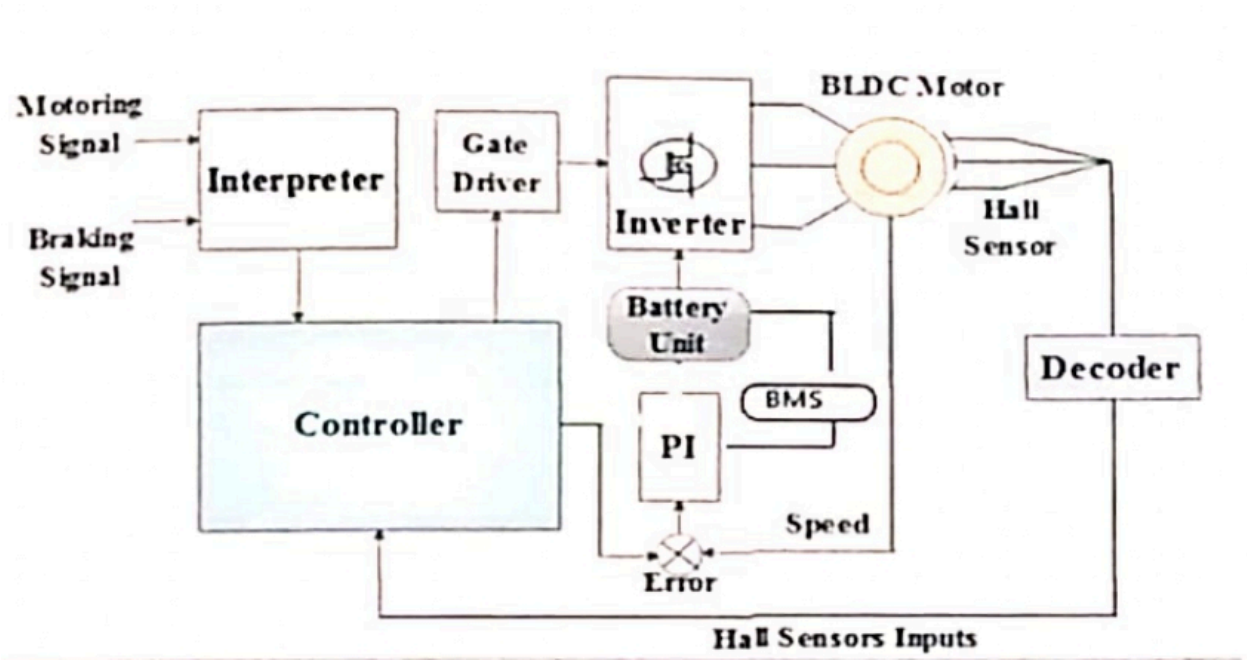

when the brakes in the vehicles are applied,controller recives the information from both the interpreter saying the brakes are applied and decoder takes the output signal from the hall sensors of the motor and instructing the controller on the activation of regenerative breaking circuit. The outputs from decoder is fed in to the controller. Speed signal is then fed as inputs after the errors are debugged.once errors in speed signal is debugged,it is fed into the PI controller and then into the battery mangememt system to regulate and monitor the supply. The voltage is then used to charge the battery.

DESCRIPTION	VALUE	UNIT
DC voltage (V_{ab},$V_{bc,}$ V_{ca})	230	V
Phase resistance (R)	2.875	Ω
Phase inductance (L)	8.5	mH
Inertia (J)	0.8×10^{-3}	$kg.m^2$
Damping ratio (β)	0.001	N.s/m

3.2 BLDC Motor Specifications

Table 3.2.1 BLDC motor specifications

Electrical angle(θ_e) in degree	Iar	I_{br}	I_{cr}
0-60	0	-1	0
60-120	1	0	-1
120-180	0	1	-1
180-240	-1	1	0
240-300	-1	0	1
300-360	0	-1	1

Table 3.2.2 Relationship between reference current and rotor position

Electrical angle(θ_e) in degree	Fa(θ_e)	$F_b(\theta_e)$	$F_C(\theta_e)$
0-60	1	-1	$(1-6/\pi)(\theta_e)$
60-120	1	$(-3+6/\pi)(\theta_e)$	-1
120-180	$(5-6/\pi)(\theta_e)$	1	-1
180-240	-1	1	$(-7-6/\pi)(\theta_e)$
240-300	-1	$(9-6/\pi)(\theta_e)$	1
300-360	$(-11-6/\pi)(\theta_e)$	-1	1

Table 3.2.3 Back-EMF normalised function of rotor position

3.3. Torque Equations

$T_a=K_t \times i_a \times F_a(\theta_e)$

$T_b=K_t \times i_b \times F_b(\theta_e-2\pi/3)$

$T_c=K_t \times i_c \times F_c(\theta_e+2\pi/3)$

$T_e=T_a+T_b+T_c$

Let $K_t=0.1755$, $I_a=2$, $I_b=0$, $I_c=-2$, $\theta_e=120$

T_e is resultant torque

T_l is load torque

β is damping ratio

θ_m is mechanical angle

θ_e= electrical angle

i_a=amature current

$F_a(\theta_e)=2$, $F_b(\theta_e-2\pi/3)=0$, $F_c(\theta_e+2\pi/3)= -16$

T_a= 0.1755 ×2 ×2 = 0.702

T_b=0.1755 ×0 = 0

T_c= 0.1755×(-2) ×(-16) = 5.616

T_e= T_a+ T_b+ T_c

T_e=0.702+0+5.616

T_e=6.318

Let T_l=5.16Nm

T_e- T_l= $J\times d^2\theta_m/dt^2+\beta\times d\theta_m/dt$

T_e-T_L= 6.318-5.16 =1.158N-m

3.4. RUNGE-KUTTA NUMERICAL METHOD

Runge–Kutta method is an effective and widely used method for solving the initial-value problems of differential equations. Runge–Kutta method can be used to construct high order accurate numerical method by functions' self without needing the high order derivatives of functions.The Runge-Kutta method attempts to overcome the problem of the Euler's method, as far as the choice of a sufficiently small step size is concerned, to reach a reasonable accuracy in the problem resolution.

RK method formulas

$K_1=h\times f(x_n,y_n)$

$K_2=h\times f(x_n+h/2,y_n+K_1/2)$

$K_3=h\times f(x_n+h/2,y_n+K_2/2)$

$K_4=h\times f(x_n+h/2,y_n+K_3)$

$y(x_n+h)=y_n+0.16667\times (k1+2\times k_2+2\times k_3+k_4)$ 2.106-0.948 = 0.0008dy/dx +0.001y

dy/dx = 1.158 -0.001y/0.0008

Iteration 1

$K_1 = h\times f(X_n+Y_n)$

$K_1 = h\times f(0,0)$

f(x,y)= dy/dx= 1.158-0.001y/0.0008 = 144.75

$K_2= h\times f(0,144.75/2)$

K_2= h×f(0,72.375)

K_2= 0.1 × 1.158-0.001(72.375)/0.0008

K_2= 135.703

K_3= h×f (0,67.851)

K_3 =0.1 ×1.158 -0.001(67.851)/0.008 =136.268

K_4= h×f(0,136.268)

K_4= 0.1 × 1.158-0.001(136.268)/0.0008 = K_4=127.7165

$Y(x+h) = y_n+0.1667(K_1+K_2+2K_3+K_4)$

Y(0+0.1) = 0+0.1667(144.75+271.406+272.53+127.7165)

Y (0.1) =136.095

SI.NO	**ROTOR SPEED(ω_m)**	**Time(t)**
1	0	0
2	136.93	0.1
3	256.435	0.2
4	482.859	0.3
5	909.209	0.4
6	1712.0111	0.5
7	3223.6606	0.6
8	6070.047	0.7
9	11429.700	0.8

3.5. Rotor emf equations

The 3phase rotor emf equations are

$E_a = K_{e*} \omega_{m*} F(\theta_e)$

$E_b = K_{e*} \omega_{m*} F(\theta_e - 2\pi/3)$

$E_c = K_{e*} \omega_{m*} F(\theta_e + 2\pi/3)$

Ke = = 0.1755 v.s.rd–1

$\Theta_e=120^0$

For

$\omega_m=136.93$

$E_{a=}K_{e*}\ \omega_{m*}F(\theta_e) = 0.1755\times136.93\times1 =24.031$

$E_{b=}K_{e*}\ \omega_{m*}F(\theta_e-2\pi/3) = 0$

$E_{c=}K_{e*}\ \omega_{m*}F(\theta_e+2\pi/3)= 0.1755\times136.93\times-11 = 264.359$

$E_t = E_a+ E_b+ E_c = -288.39$

Similarly for other iterations emf values are found

ITERATION VALUES

SI.NO	ROTOR SPEED(ω_m)	Time(t)	EMF
1	0	0	0
2	136.93	0.1	-288.39
3	256.435	0.2	-504.053
4	482.859	0.3	-1016.902

5	909.209	0.4	-1914.74
6	1712.0111	0.5	-3605.49
7	3223.6606	0.6	-6789.0297
8	6070.047	0.7	-12783.51
9	11429.700	0.8	-24070.944214

3.6. FLOW CHART

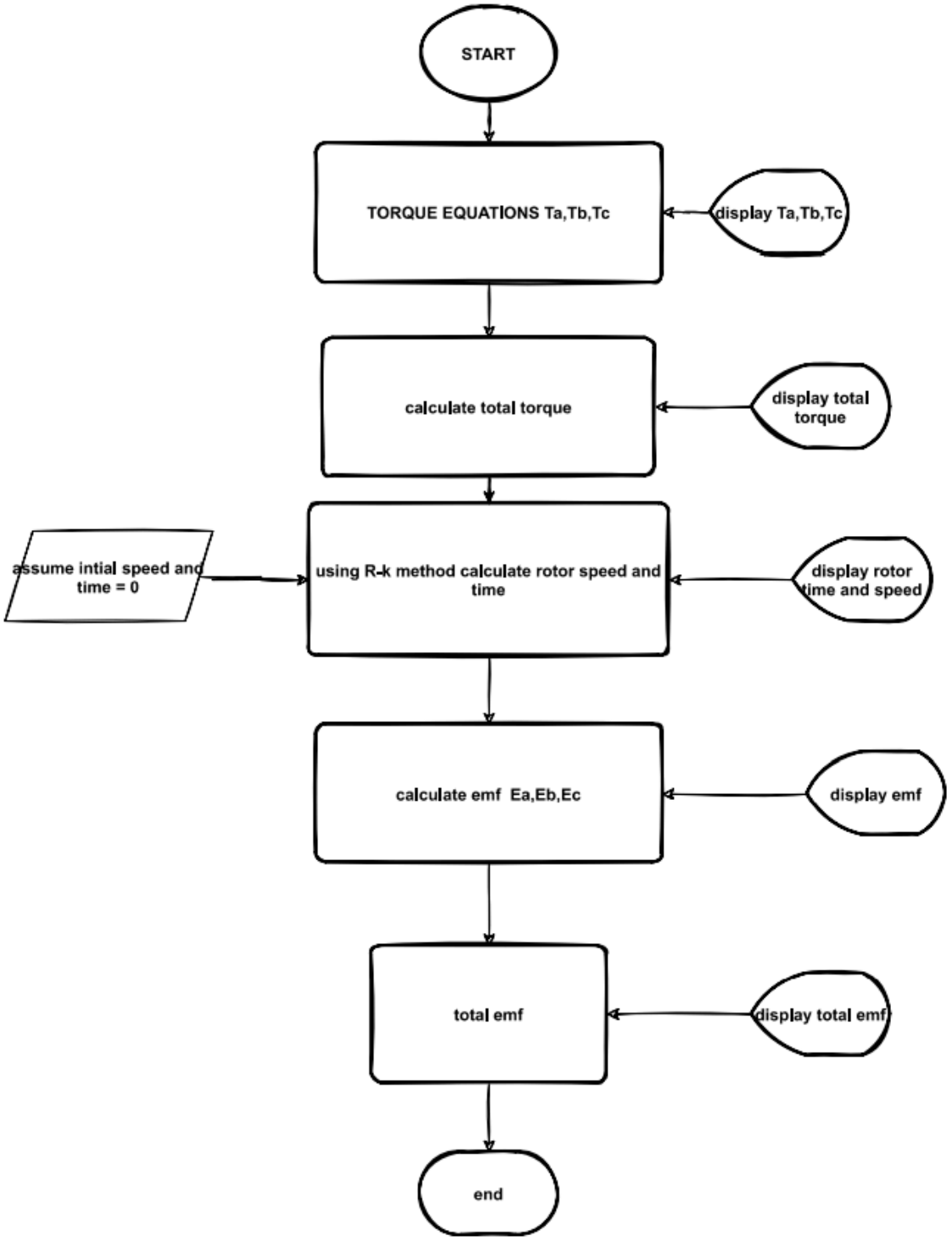
START
TORQUE EQUATIONS Ta,Tb,Tc
display Ta,Tb,Tc
calculate total torque
display total torque
assume intial speed and time = 0
using R-k method calculate rotor speed and time
display rotor time and speed
calculate emf Ea,Eb,Ec
display emf
total emf
display total emf
end

4. RESULTS AND CONCLUSION

4.1 RESULTS

Trapezoidal back EMF using Matlab

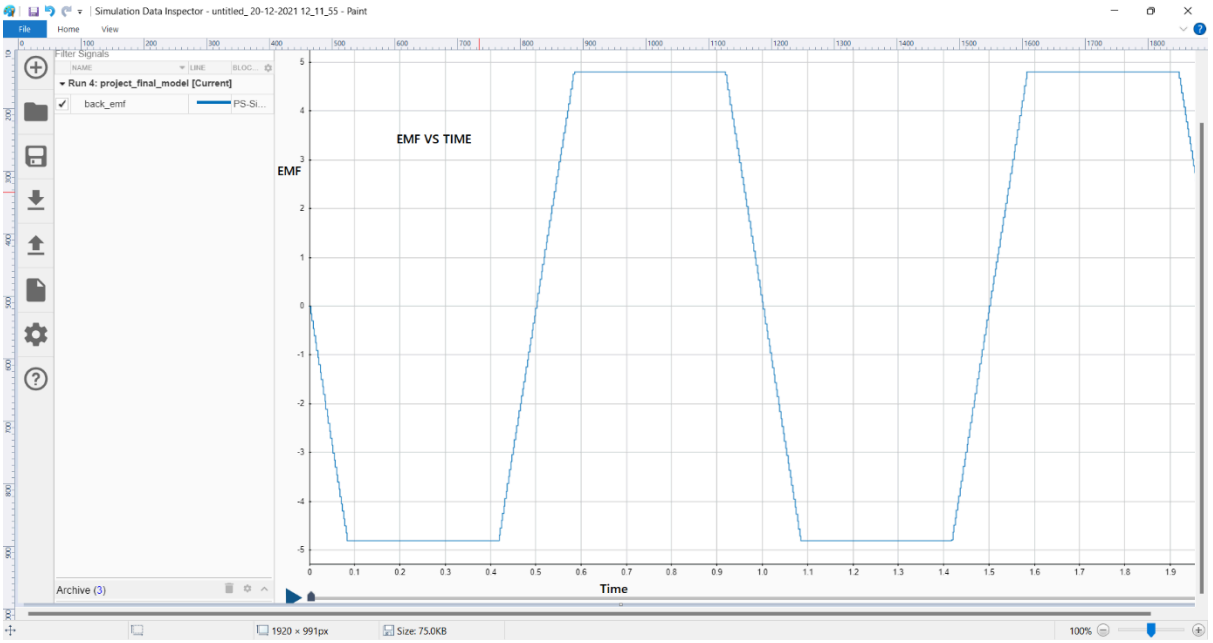

Speed vs Time characteristic

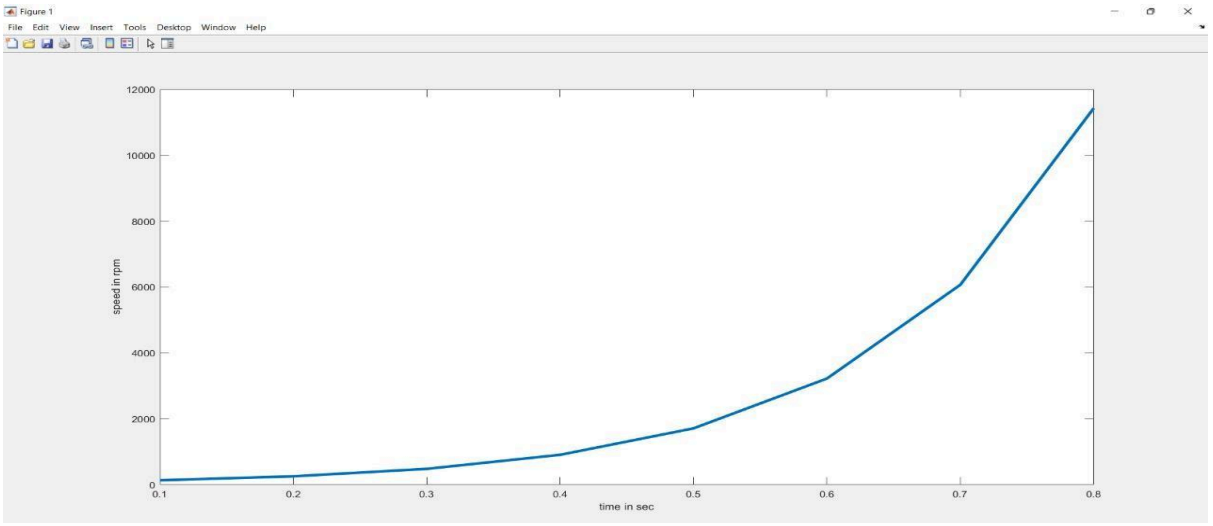

4.2 CONCLUSION

- The BLDC motor model with trapezoidal Back-EMF is generated that is used to charge the battery during regenerative mode of the electric vehicle.
- Remaining energy can be stored in capacitor without wasting it.
- Here we have solved the equations of back emf, Torque and speed of BLDC motor using fourth order RK method.
- C code is written on the basis of the above equations obtained.

REFERENCES

- Sen PC. Principles of Electric Machines and Power Electronics. New York: John Wiley & Sons; 1997
- Dubey GK. Fundamentals of Electrical Drives. 2nd ed. Kanpur: Alpha Science Int. Ltd.; 2001
- BikramDas, Suvamit Chakraborty, Prabir Rn-Kasari, Abanishwar Chakraborti & Manik Bhowmik "Speed Control of BLDC Motor.
- P. Yedamale, “Brushless DC (BLDC) Motor Fundamentals”.
- T.Kenjo,”Permanent Mangnet and Brushless Dc motor”- Oxford -1985.
- Andrew Day, “Electronic Braking Systems in Braking of Road Vehicles”, 2014 .
- Naffa Jeddi and lilia ei Amraoui—“Modelling and stimulation of a BLDC Motor speed control system for electric vehicles research paper” -2016

Project Associates

1	**PRIYANKA INAMATI**	**Priyankainamati29@gmail.com**	**9986239068**
2	**SHWETA**	**shwetamm104@gmail.com**	**7259003437**
3	**POOJA V KOTRANNAVAR**	**Poojakotrannavar3@gmail.com**	**72899652814**
4	**NIKITHA BANAKAR**	**Nikithabankar38@gmail.com**	**9913280964**