Common Pendulum CAD Errors

Below you will find issues that students have previously struggled with or general good reminders to keep your CAD clean.

Please refer to the table of contents below to find what you need.

[Trimming Error](#)
[Layer Separation](#)
[Sketch Not Enclosed](#)

Trimming Error

*During step 4 be sure to trim **only** the following lines highlighted in red, otherwise it might be difficult to file the Clock in the next step.*

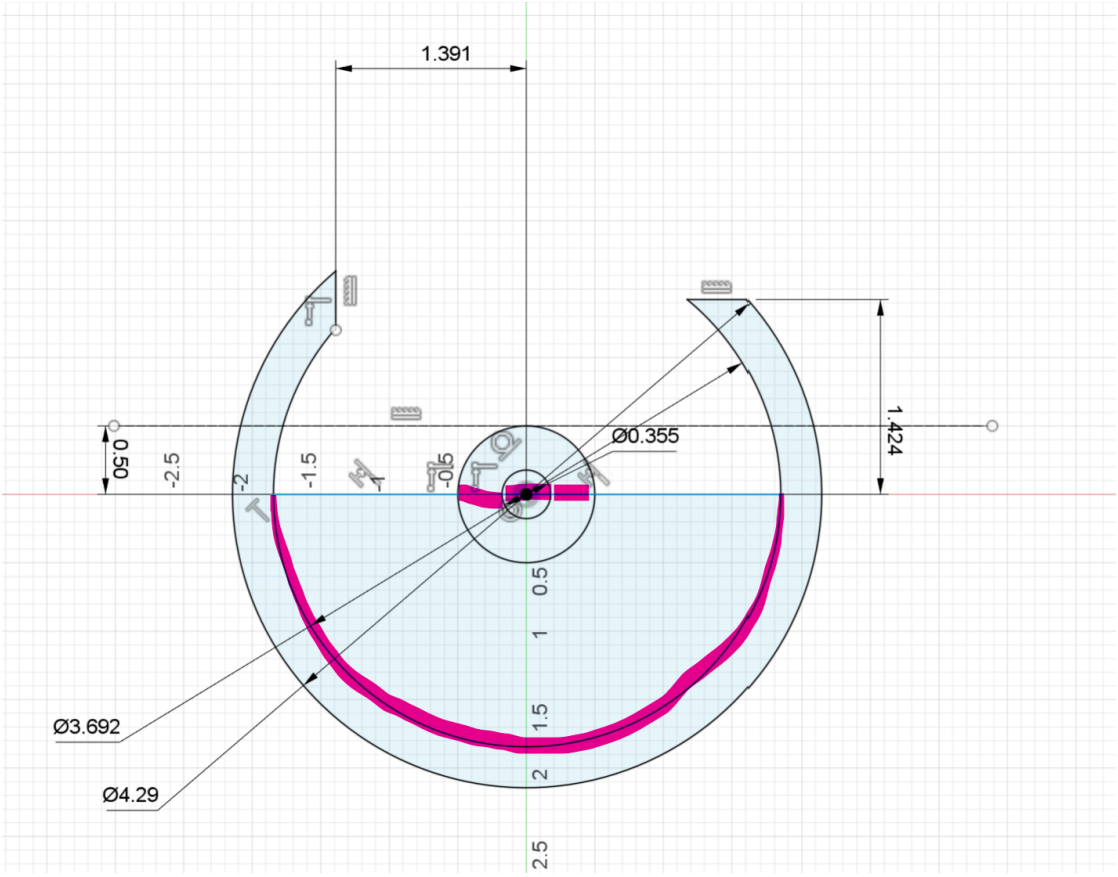

It should look like this now:

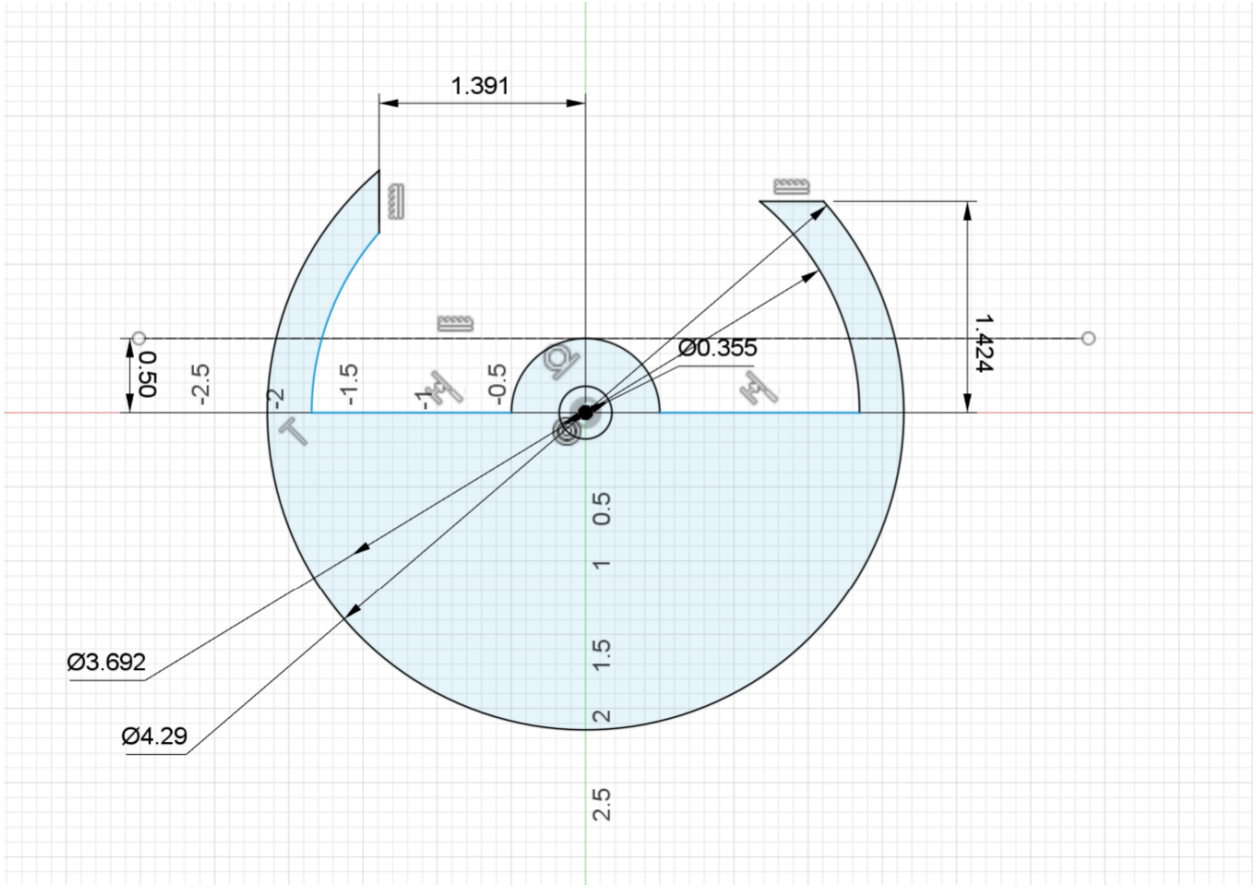

Now be sure the corners look like this so you can easily filet the corners:

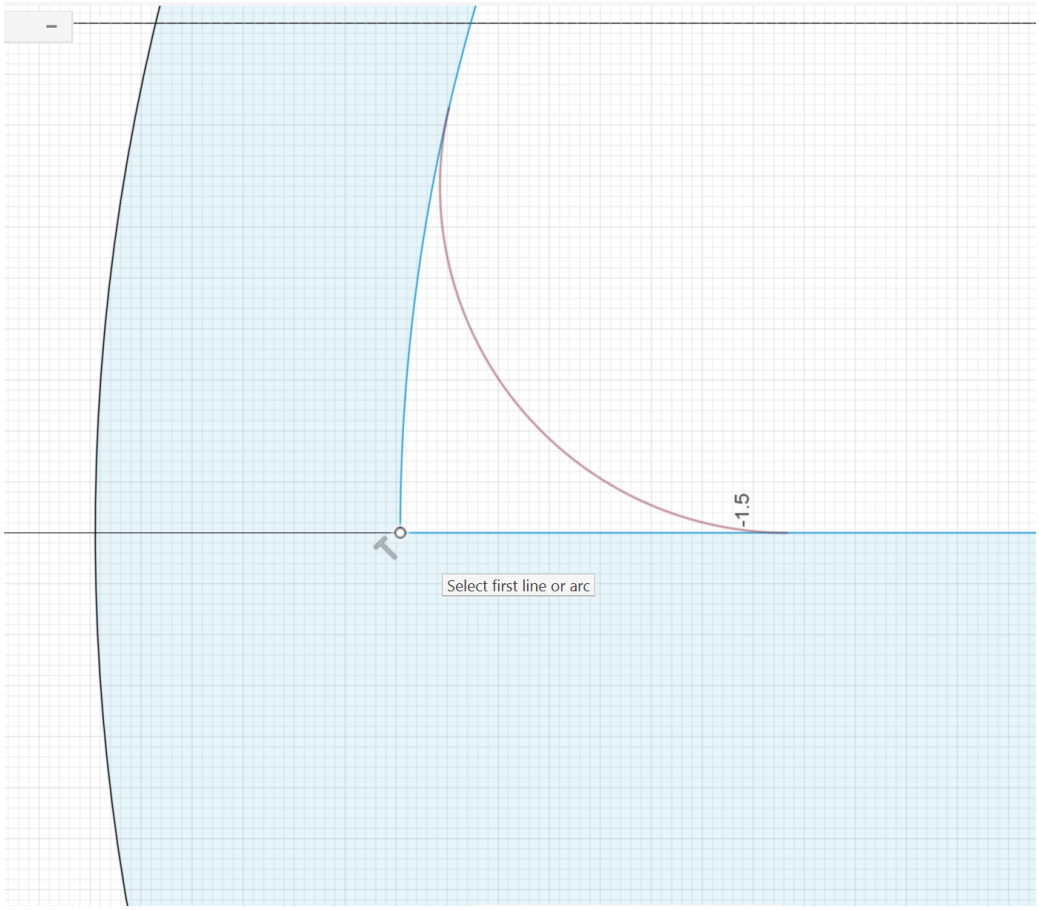
-1.5
Select first line or arc

Layer Separation

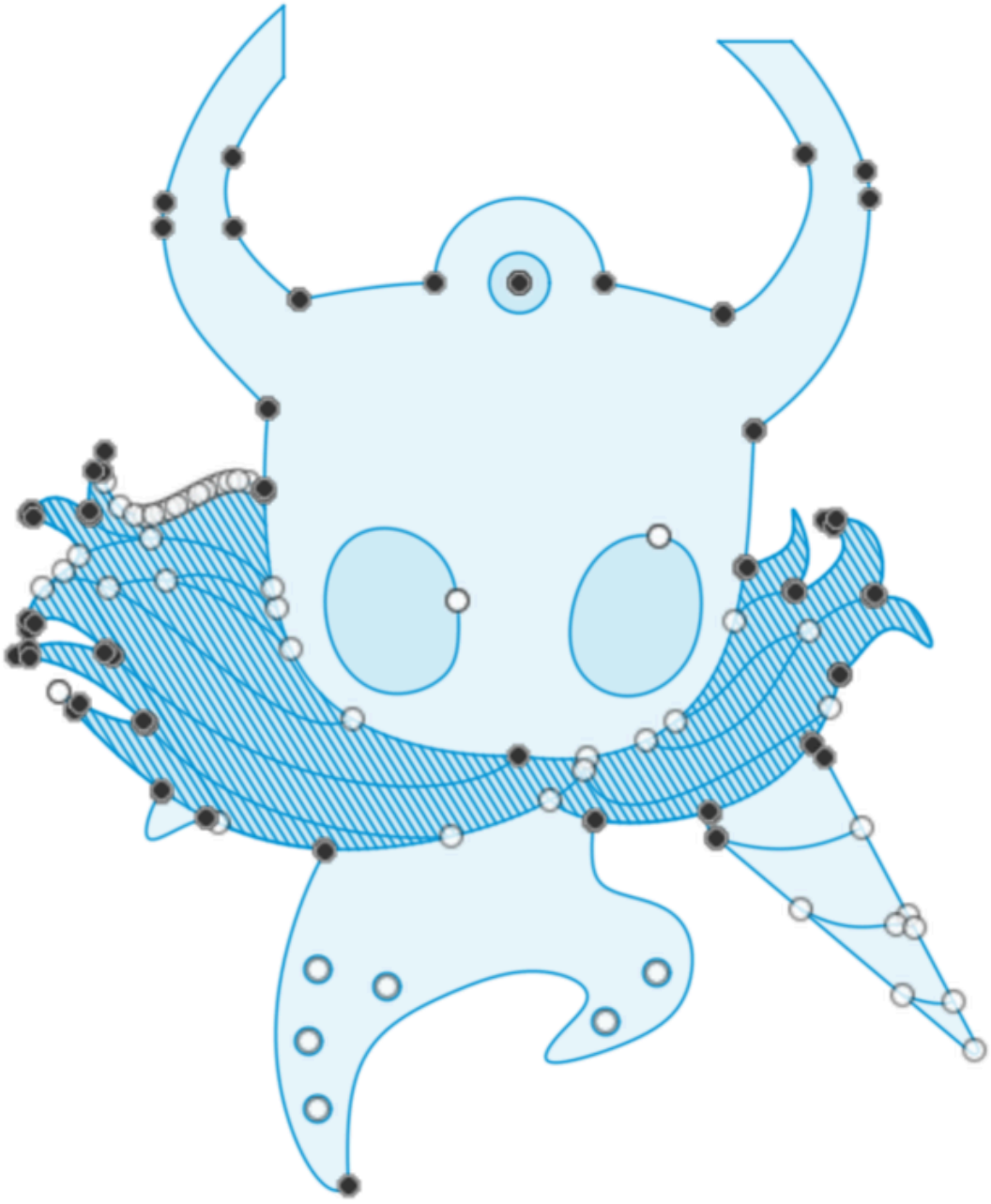

All students should have 3 layers: Inside Cut, Outside cut, and Etching

Inside Cut:

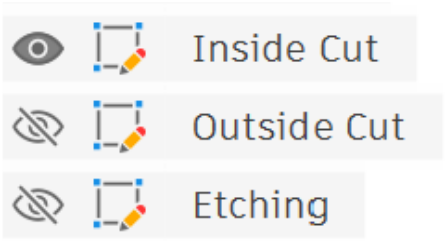

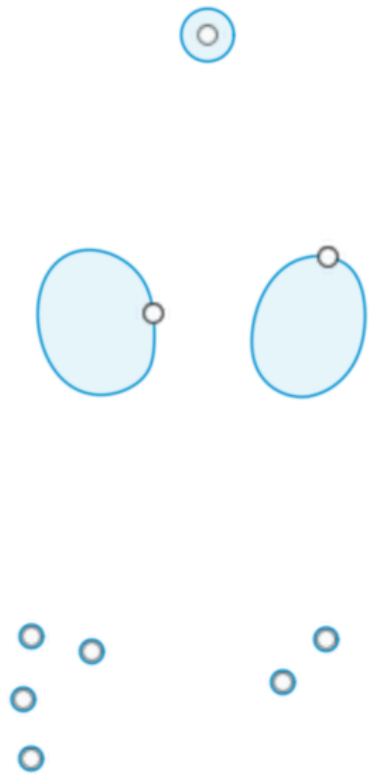

Outside Cut:

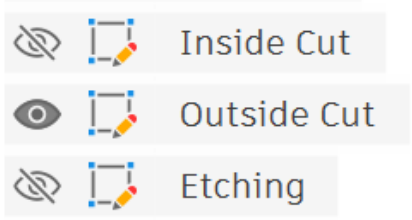

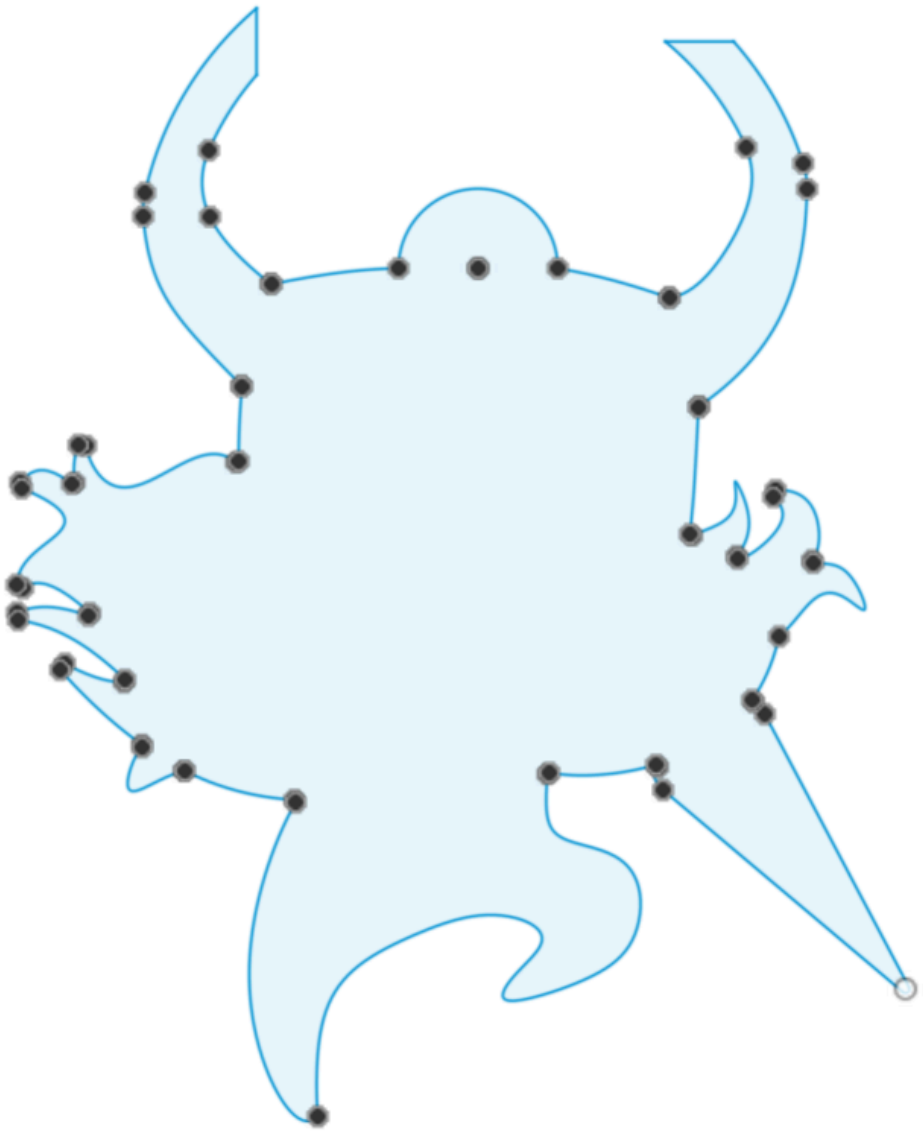

Etching:

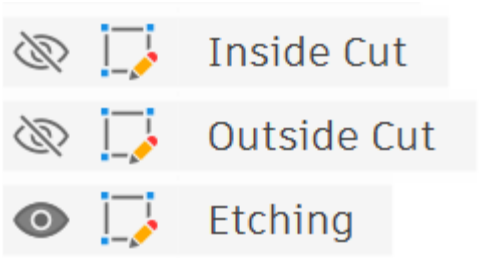

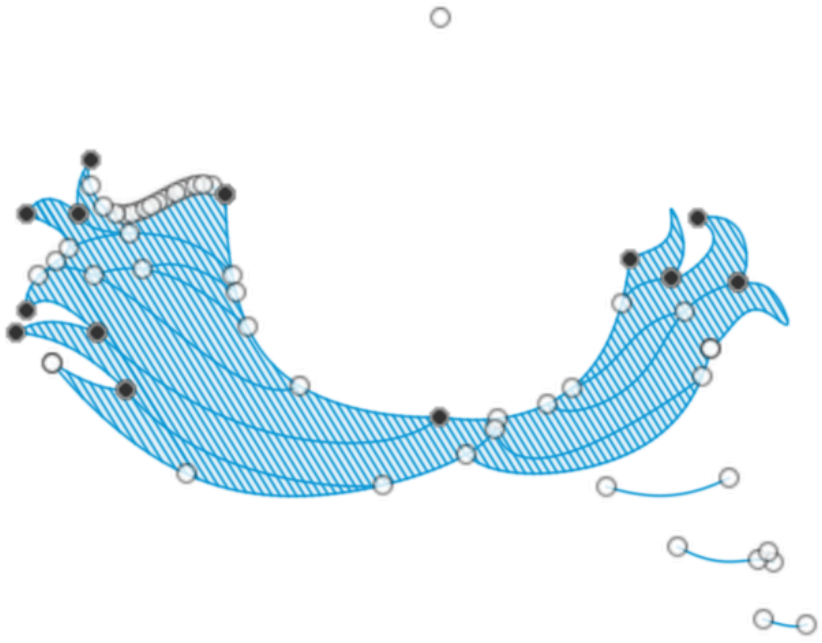

Sketch Not Enclosed

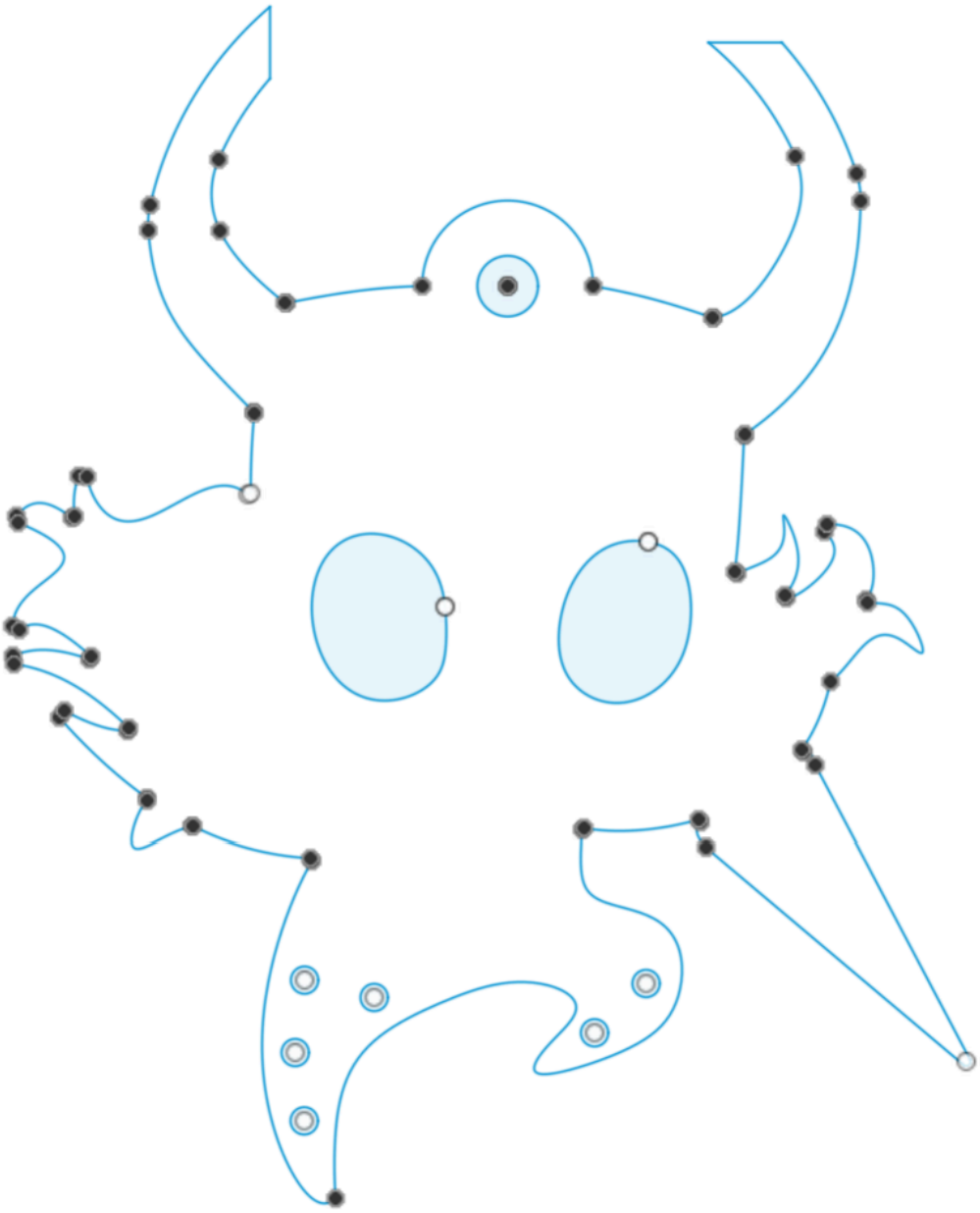

When your sketch is Not highlighted blue, this means your sketch isn’t enclosed.

To fix this, zoom into the lines and try to find where there might be an opening in order to close it up so you can properly extrude!

