Won’t let me write normally (grrr) so ima just wing it, number corresponds to the images:

1. Initial concept (kinda? not really, I had no idea what I was doing lol.)
2. The original design for the x-axis used POM wheels, which I knew existed because of the Ender 3.
3. Alternative angle with slight modifications, I think.
4. Redesign of the plate with the POM wheels to hold the printhead’s components; Half the design process was like this, get the mounting/crucial hardware in (pom wheels), then get the other stuff on it (screws, nuts, t-nuts). Very messy, but it works for the most part.
5. Brainstorming how to mount the X-axis stepper motor, also some changes on the printhead
6. TOTALLY not the design I took inspiration (replicated without any help except reference images because I’m that dumb) from.
7. My poor attempt to integrate the X-axis stepper motor into the Y-axis carriage.
8. Missed a few screenshots (I knowww I’m sorry I can’t find them in my Google Drive where I stored like 50+ total screenshots;-;) but this was more brainstorming for stepper mounting once I switched to linear rods for the Z and X axis.
9. Left tensioning bracket (The left clamps/holders for the linear rods)
10. Stepper integrated into left tensioning bracket
11. Partial assembly of the gantry
12. Complete assembly of the gantry with the right tensioning bracket and built-in belt tensioner
13. Gantry mounted to frame (Missing screenshots of the design of the thrust bearing stuff, but the frame was super easy to design since I was just joining 2020 extrusions together with my own modeled brackets.)
14. Final product with the rest of the Y-axis motion system designed, electronics mounted, and dozens of microchanges because most things did NOT want to fit together.

This isn’t the best timeline since I lost most of the images, but they should help jog my memory and provide at least a little bit of context for how I did what I did.

15. 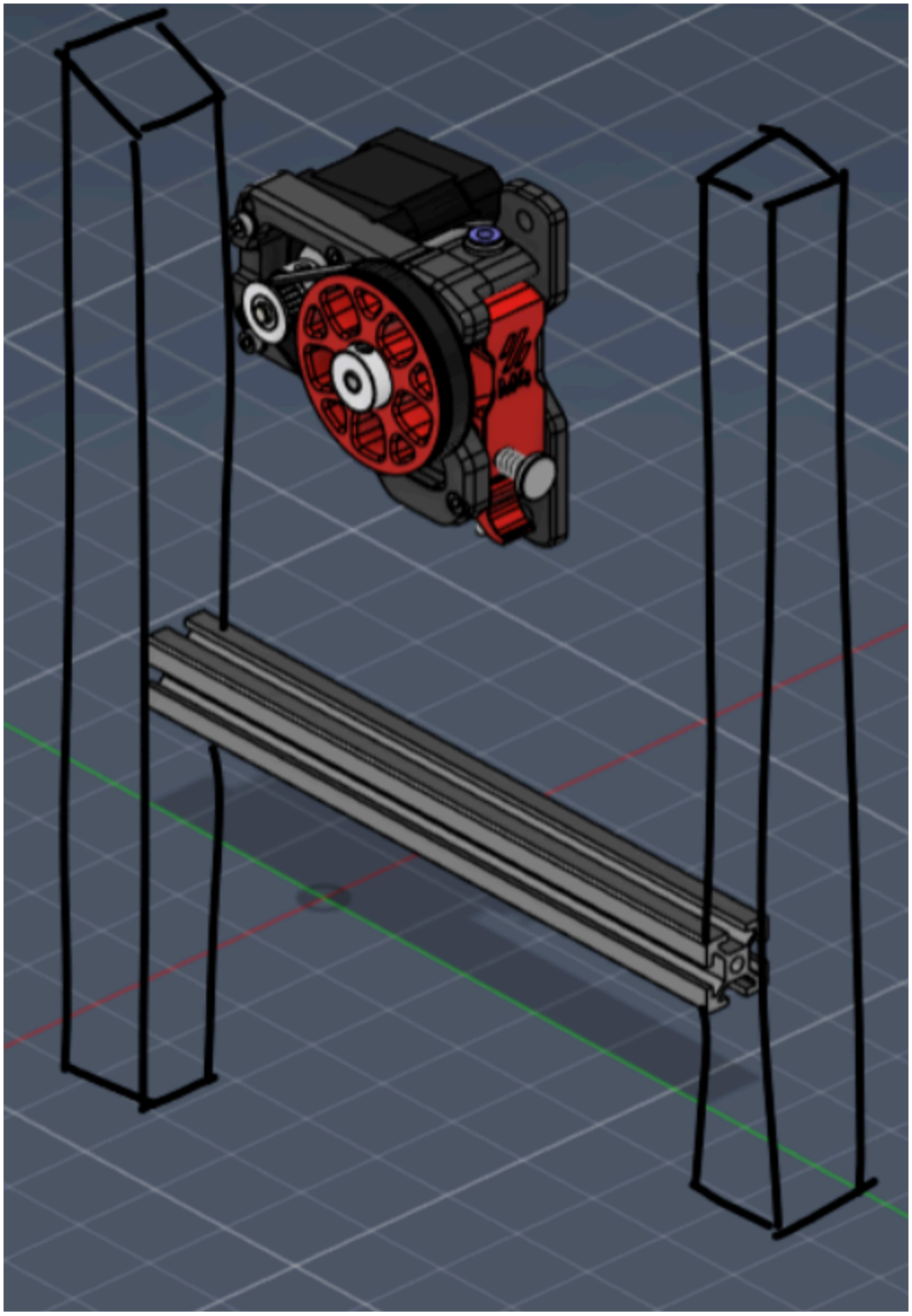

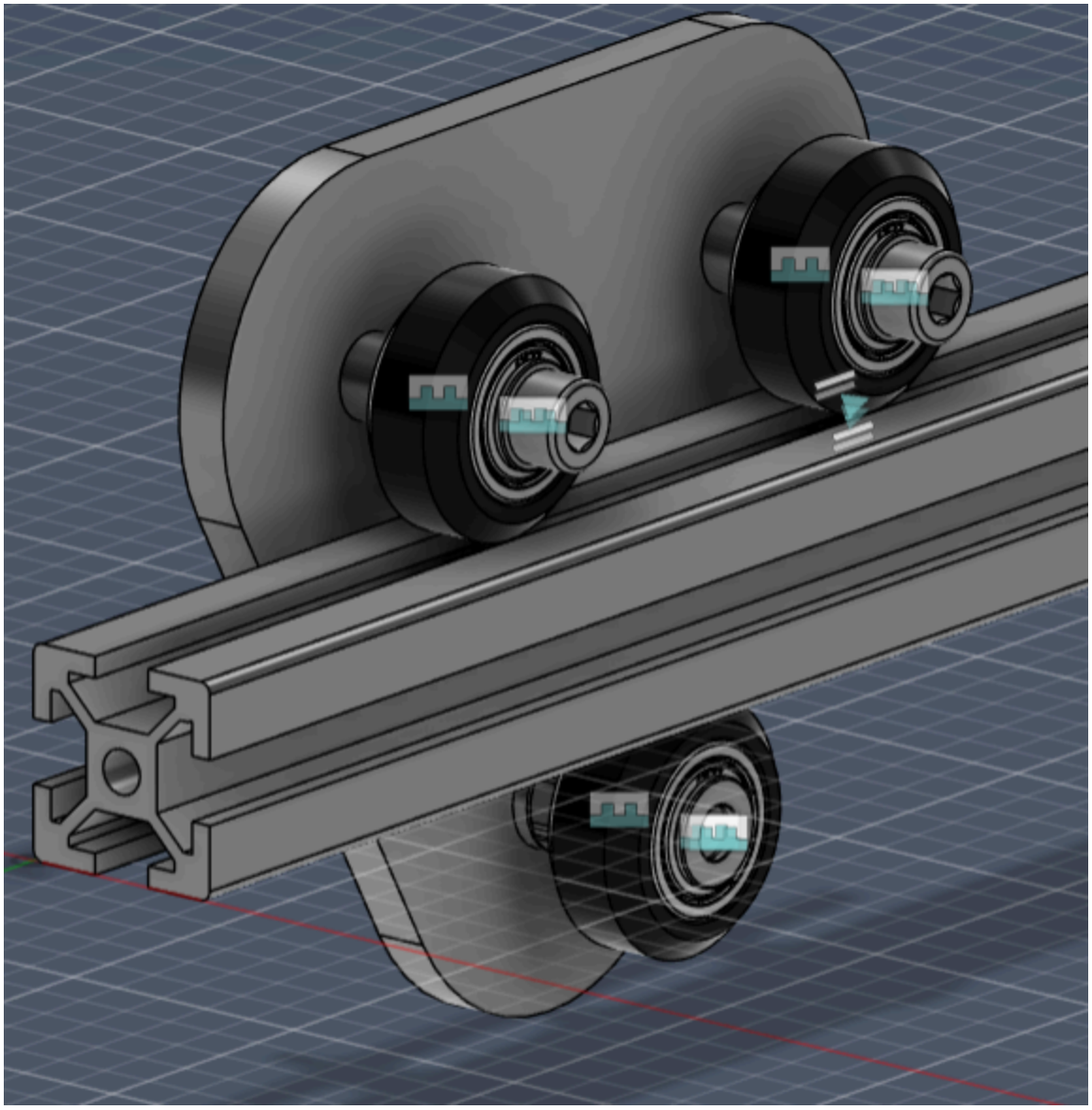

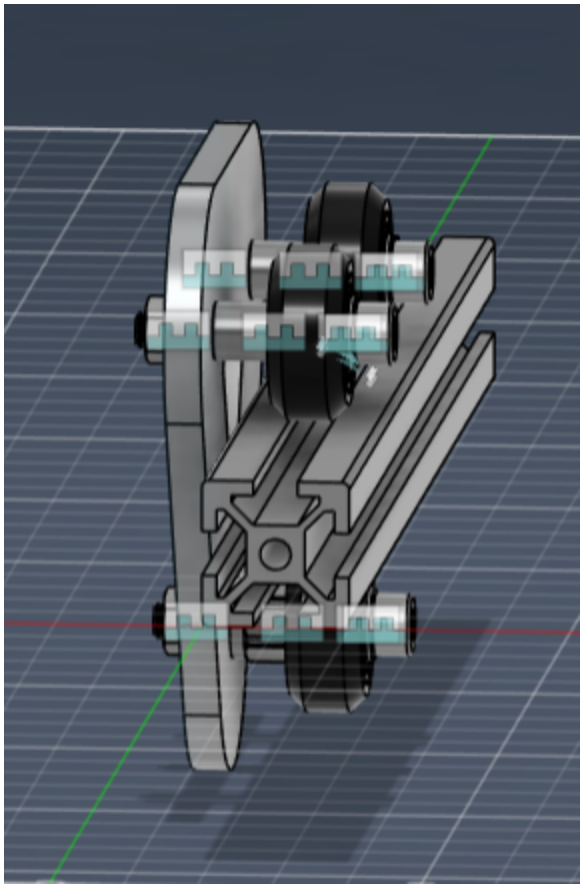

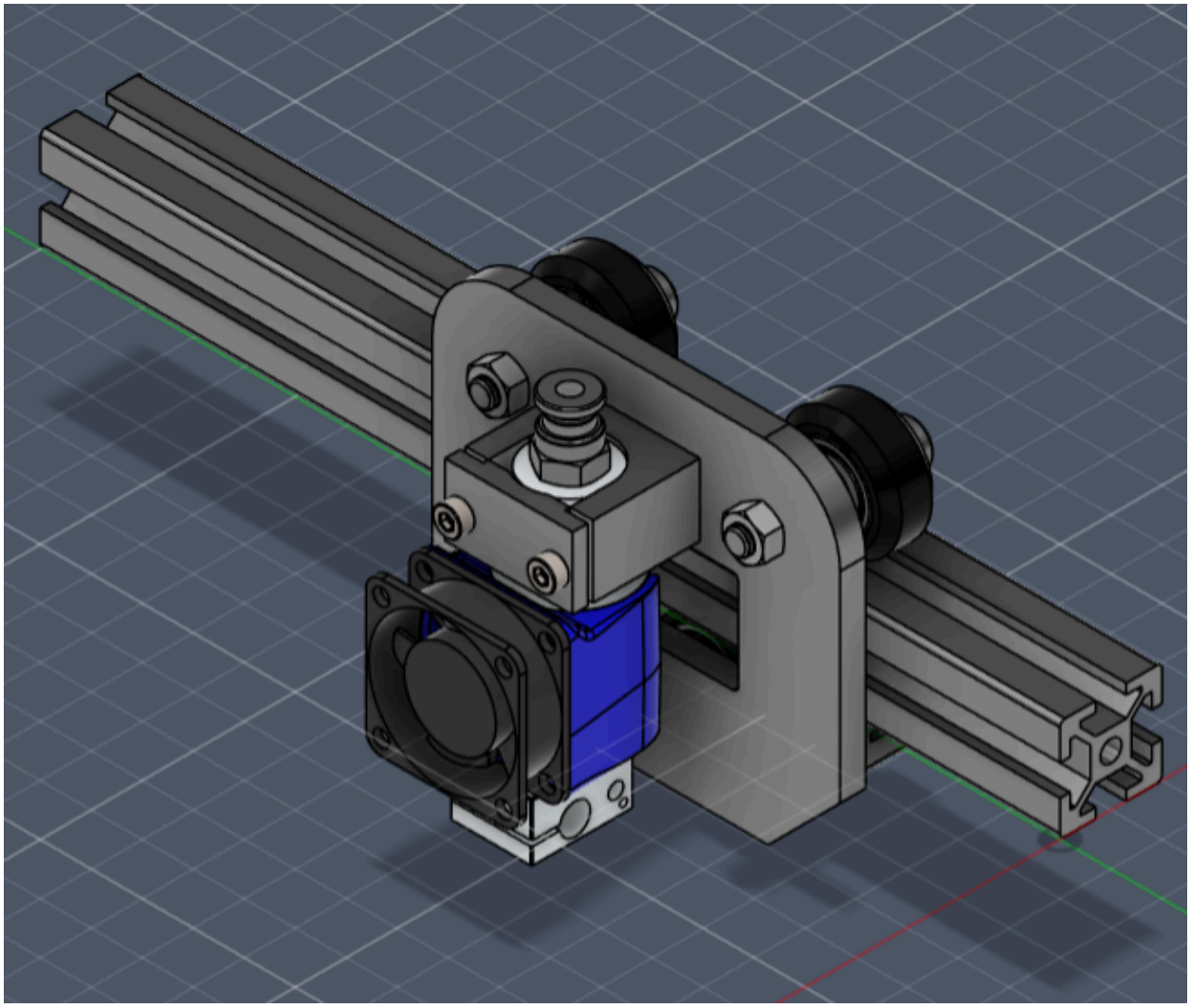

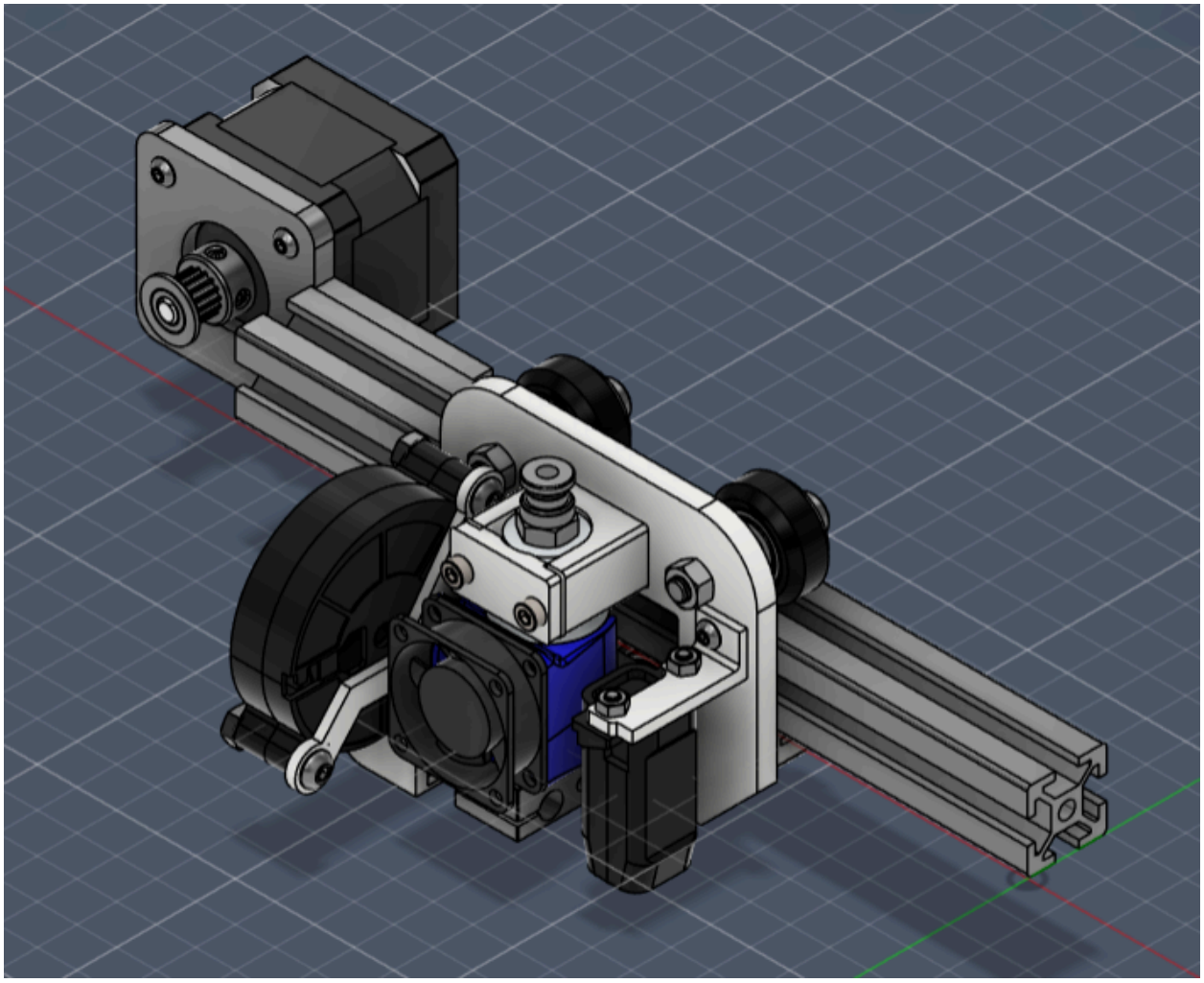

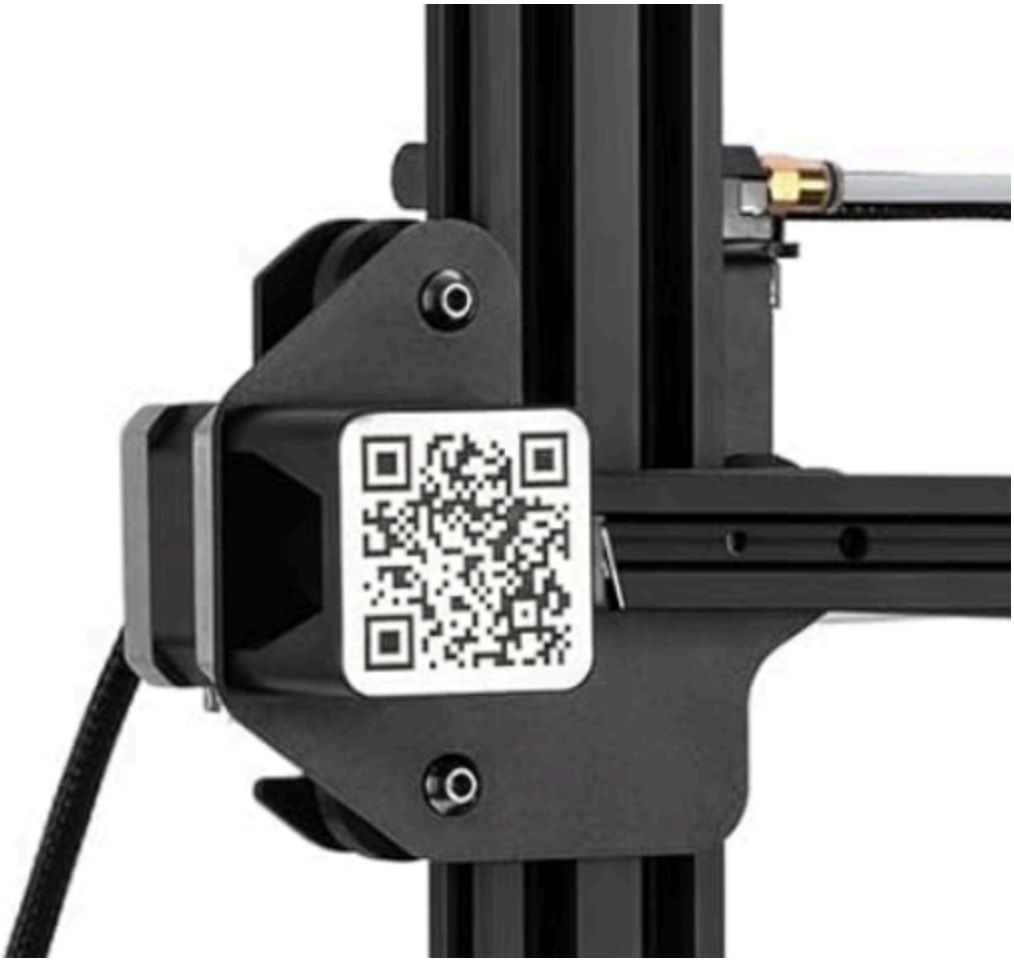

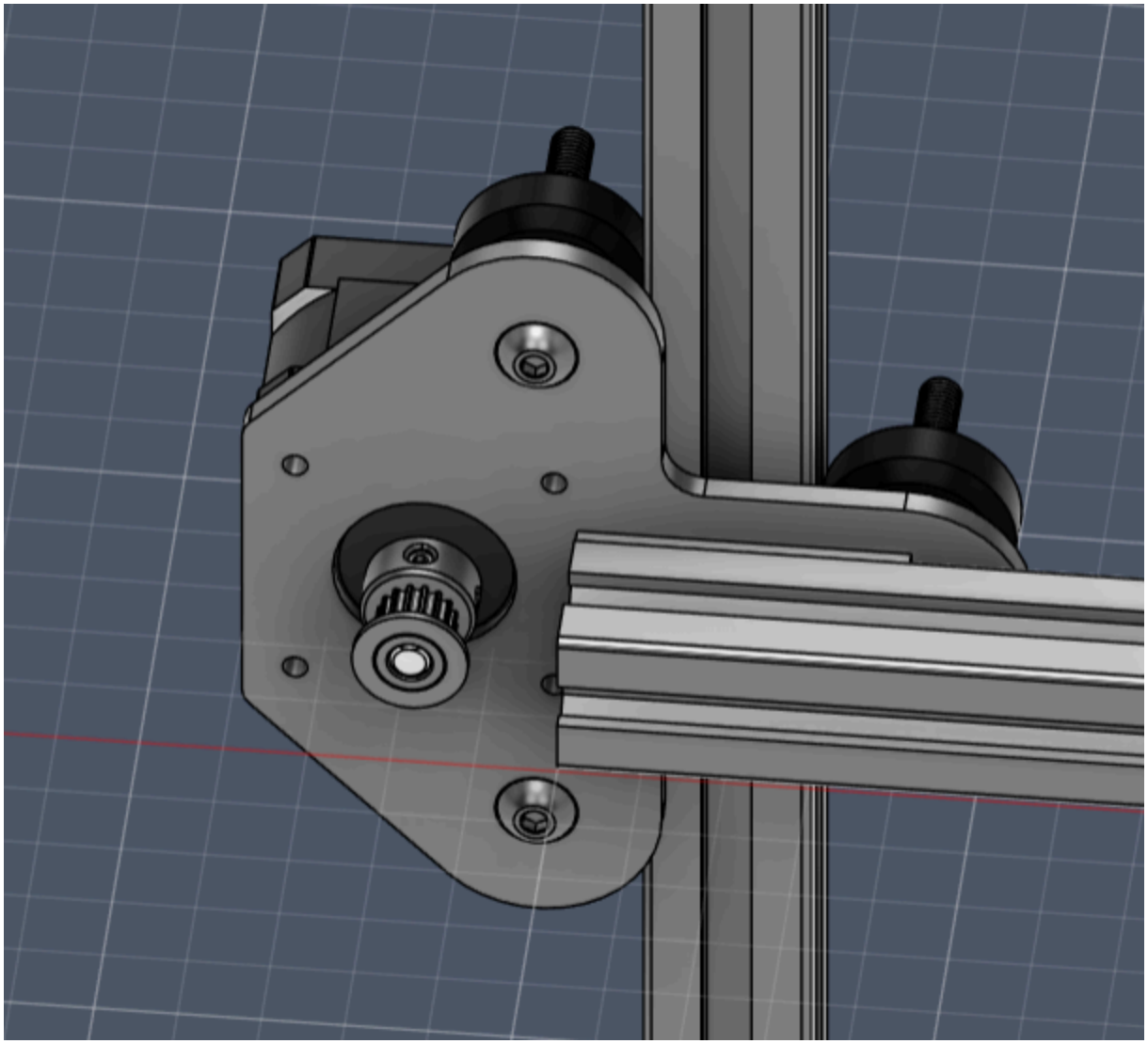

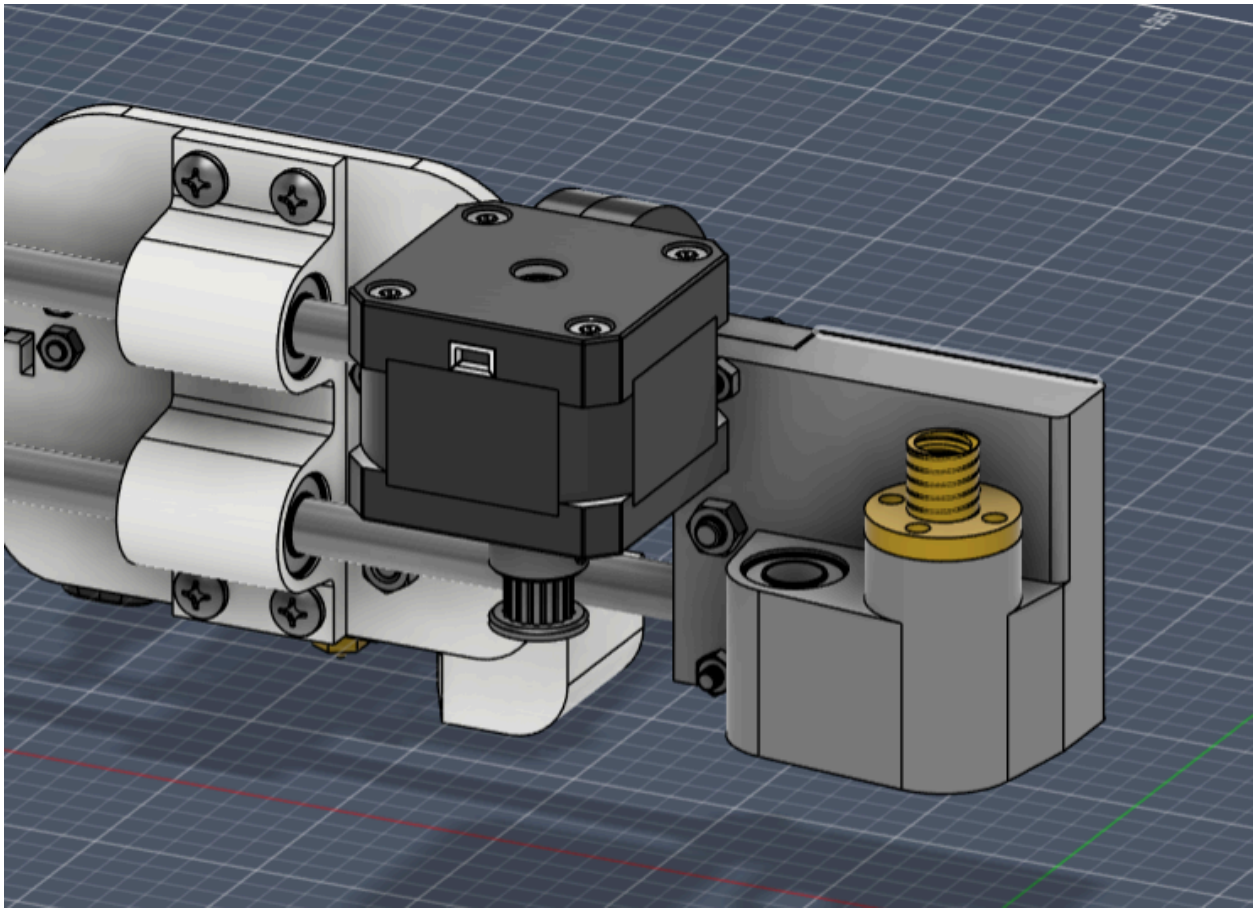

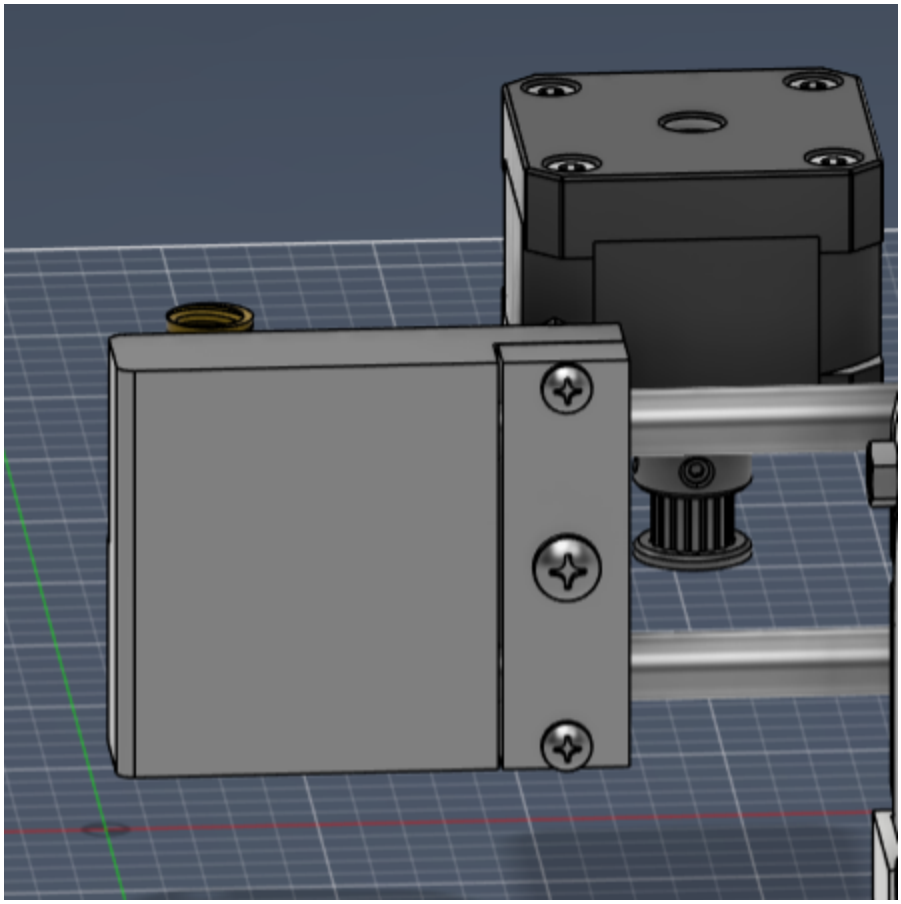

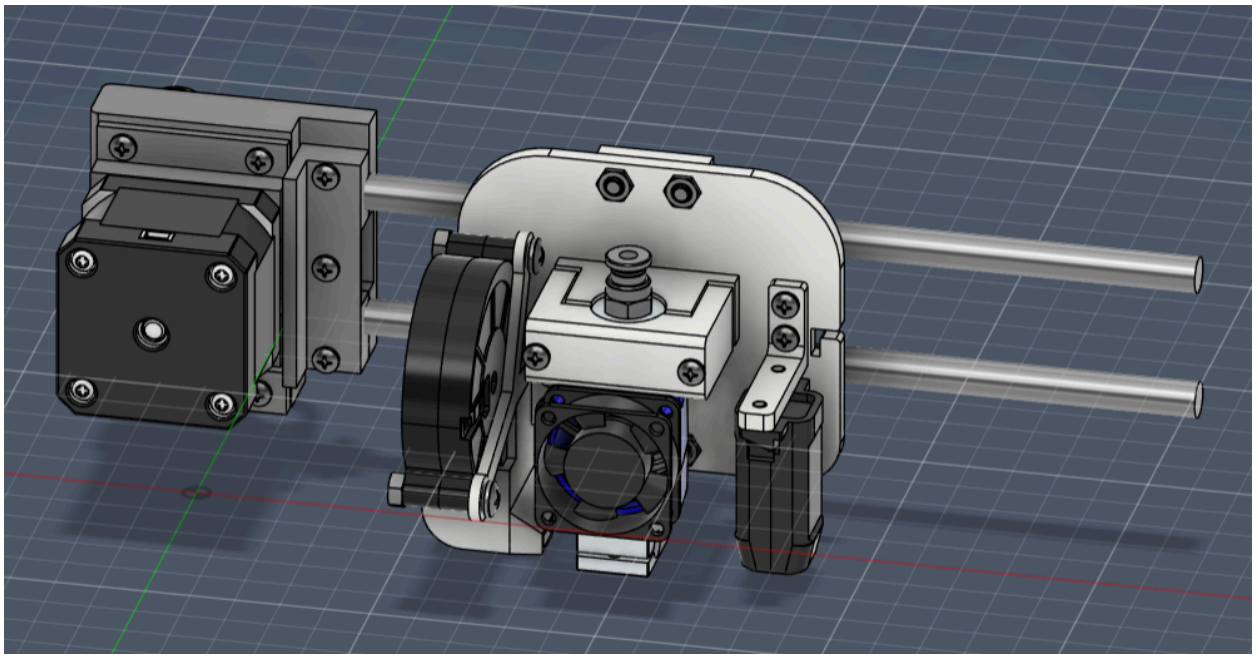

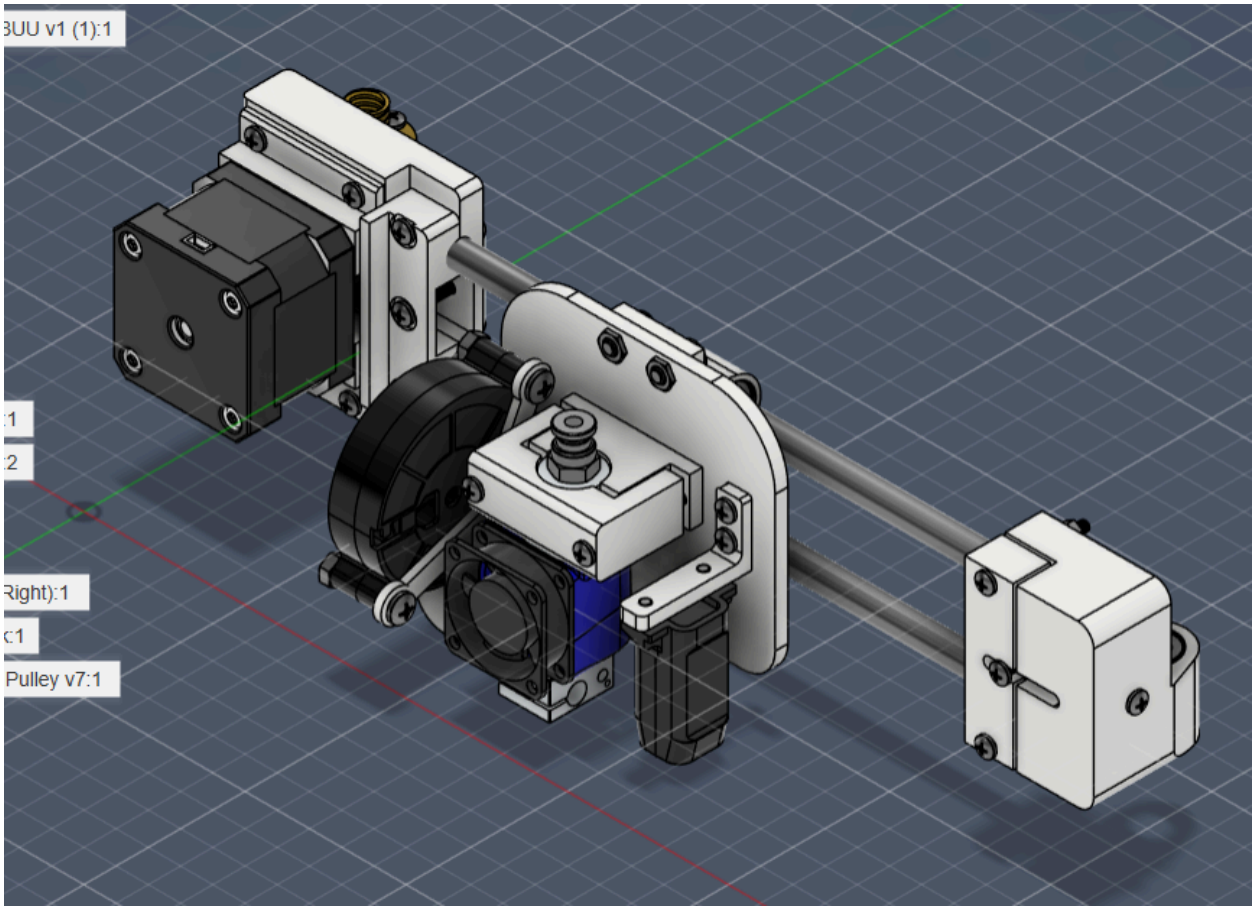
3UU v1 (1):1
:1
:2
Right):1
c:1
Pulley v7:1

