MCAS Questions: Levers & Pulleys

Reporting Category: Technology/Engineering
Standard: 1.2 - Identify and explain the appropriate materials and tools (e.g., hammer, screwdriver, pliers, tape measure, screws, nails, and other mechanical fasterners) to construct a given prototype safely.

1. (2014) Adele wants to fasten two pieces of wood together, as shown below.

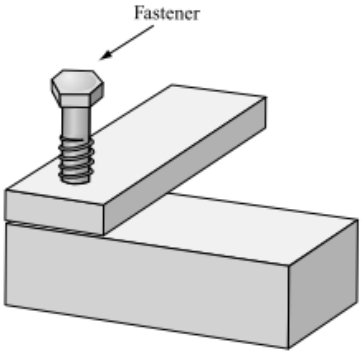

Which of the following tools would be **best** for Adele to use to turn the fastener?

A.

B.

C.

D.

2. (2011) Which of the following objects is an example of a simple machine?

A.

B.

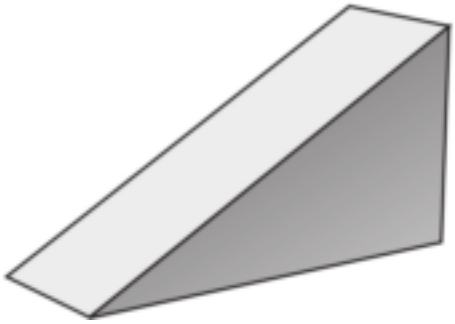

C.

D.

3. (2008) Which of the following objects does **not** have a wedge?

A.

axe

B.

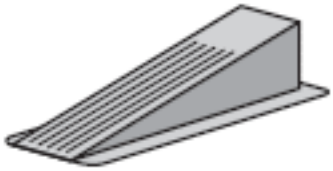

doorstop

C.

knife

D.

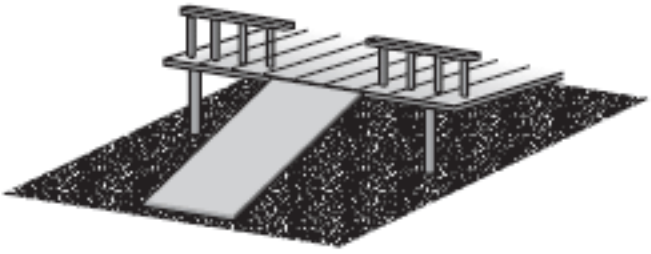

ramp

4. (2007) The picture below shows an antique piano stool.

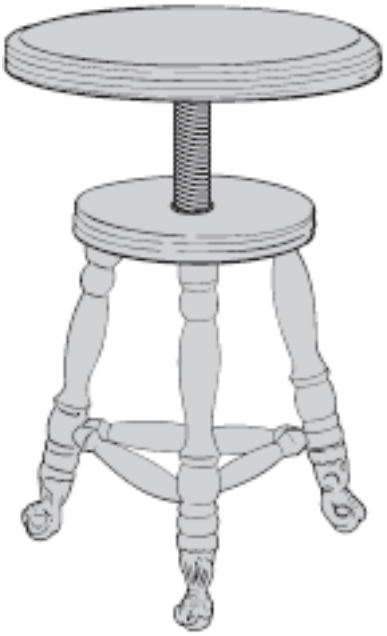

This piano stool uses what type of simple machine to adjust the height?

A wedge
B screw
C pulley
D Lever

5. *(2007)* Andrea has a wooden board that is 3 m long, as shown below.

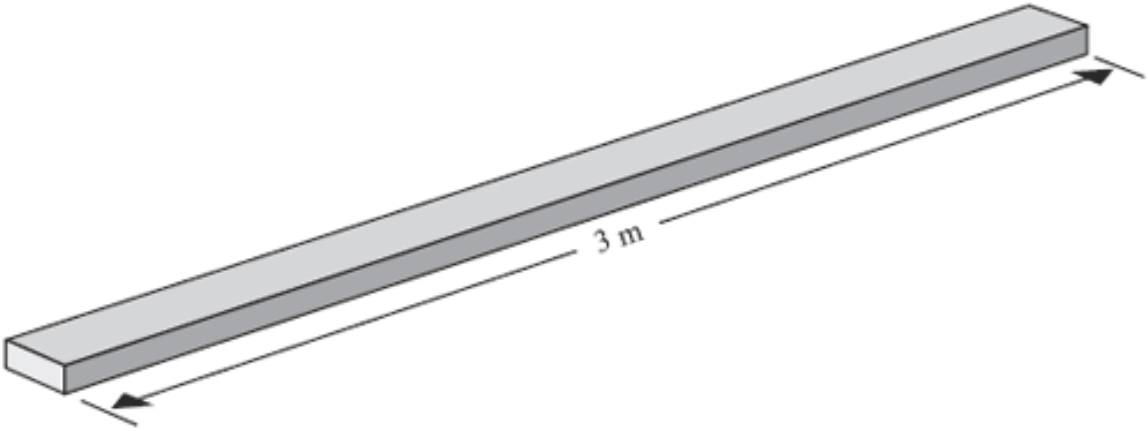

Which of the following pairs of tools would be **best** for Andrea to use to cut the board into three pieces of equal length?

A a saw and an ax
B an ax and a hammer
C a tape measure and a saw
D a hammer and a tape measure

6. *(2007)* The picture below shows tongs.

The tongs work as which of the following simple machines?

A Inclined plane
B lever
C pulley
D Wedge

1. *(2011)* A group of students is building a cart with some of the materials and tools shown below. The cart will be used to move boxes between classrooms.

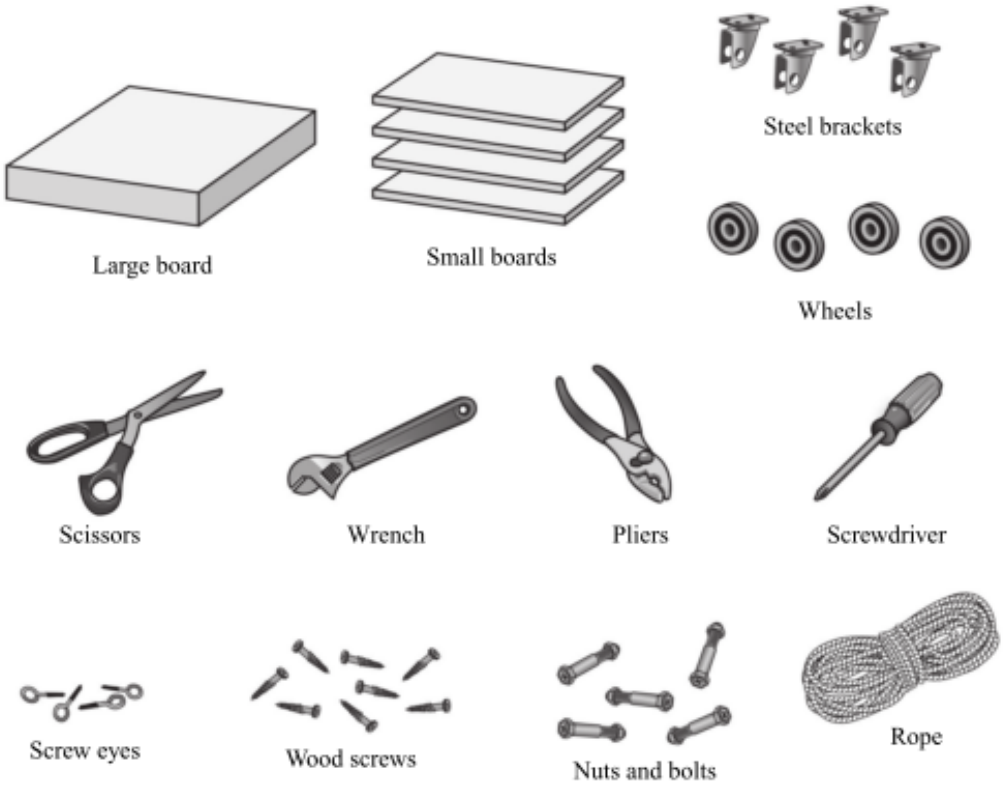

a. Identify which type of fasteners would be **best** for attaching the wheels to the steel brackets.

b. Identify **two** tools that could be used to attach the wheels to the steel brackets with the fasteners you identified in part (a).

c. The students attach the wheels and brackets to the large board. They pull the cart with a piece of rope. When the students use the cart to move a box, however, the box slides off the cart.

d. Describe how the students could improve the cart so that the box stays on the cart when the students move it. Be sure to identify which materials and tools the students should use.

MCAS Questions: Levers & Pulleys
Multiple Choice Answers

1. **B**
2. **B.**
3. **D.**
4. **B.**
5. **C.**
6. **B.**

MCAS Questions: Levers & Pulleys
Open Response Answers

Question 1
Score Point 4

Students used diffrent materials to build a cart.

a.

- nuts and bolts

b.

- wrench
- screwdriver

c. The students could put small boards around the sides of the cart. They could use wood screws to atach the small boards to the large board and the small boards to each other. They would also have to use a screwdriver to screw in the screws.

Those are the diffrent materials the students used to build a cart.

Score Point 4

(a) I think the best type of fastener to attach the 4 wheels to the 4 steel brackets is the nuts and bolts.

(B.) Two tools that I would use to attach the wheels to the steel brackets with the nuts and bolts are the screwdriver and the pliers.

(C.) Now that the wheels and steel brackets are together with the nuts and bolts, we need to atach them to the bottom of the large board with some wood screws. We are going to use the screwdriver to secure them. To make sure the boxes don't fall off, I'm going to attach one small board to each side of the large board. To attach them, we need 2 wood screw's for eachside. I'm going to use the screw-driver to secure them. To make a handle, I'm going to use the scissors and cut some rope. I need two screw eyes on one side of the cart so I can attach the rope. I'm going to attach the screw eyes with a wrench. I weave the rope through the holes to make a handle.

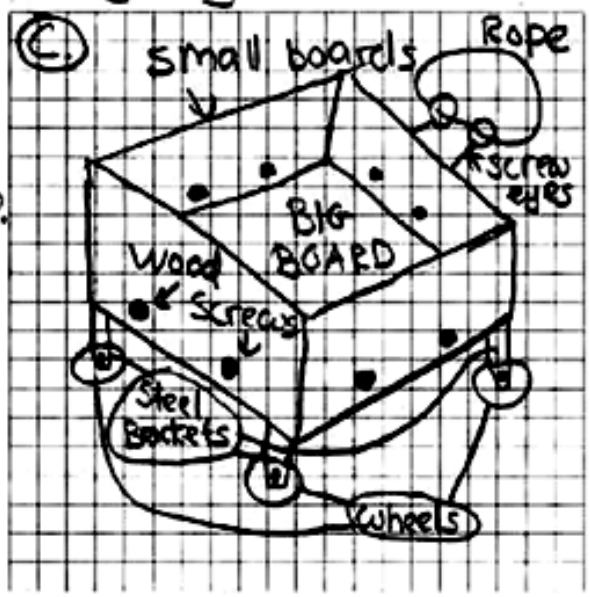

Score Point 3

a-screw driver
b-screwdriver and wrench
c-use the screw driver and wood screws to attach the small boards to the sides of the large board

Score Point 2

A. The types of fasteners that would be best for attaching wheels to the steel brackets would be the Screwdriver and the Screw eyes, and wrench.

B. Two tools that could be used to attach wheels to the steel brackets with the Screwdriver Screweyes, and Wrench would be Wood Screws, and nuts and bolts.

C. The way students can improve the cart so that when they move it, the box doesn't fall off is by using rope to tie the box to the cart. They would also add more wheels so the cart can move a little faster, or smoother to get it off the ground. The also could use the small boards to block the box so it doesn't fall off. They screw on the small board to the back, front of box with wood screws and a Screw driver. Those are some ways of improving so the box will stay on the cart.

Score Point 1

a. Wood screws

b. You could use wood screws and use the nuts and bolts.

c. You could use the small boards and attach each board on one side of the surface.

Score Point 0

(a) The students use a tools small boards, steel brackets, wheels, wrench, pliers, screwdriver wood screws, nuts and bolts, screw eyes.

(b) The two tools is rope, large board.

(c) The students use tools det a box stays.