The following is the structure of a Design History File at Texas A&M that is compliant with FDA CFR 820.30 Subpart C -- Design Controls. Do not deviate from this Quality Management Systems (QMS) documentation and please follow appropriate version control and dating of changes to documents

Design History File **Absorbable Microneedle Nasal Dilator**	
This document is the confidential property of Treatment Masters and may not be reproduced without prior written consent	Stamp here

Approved By:	Signature:	Date:
Author: Mariana Cantu	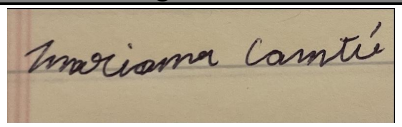	4/16/2021
Author: Ashley Hicks		4/16/2021
Author: Jazmine O. Cardenas		4/16/2021
Author: Amulya Kadaba Srinivasamurthy		4/16/2021
Author: Rachel Rice	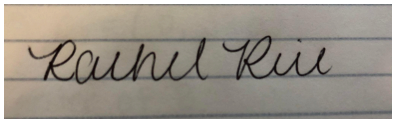	4/16/2021



Section of DHF	Information Pertaining to Product Design & Development to be Provided	Quality System Document Used	Relevant Standards
Design Input	• Clinical background, procedure overview and mapping • Preliminary and final design requirements and technical/clinical considerations	Section 1. Problem Statement and Clinical Need Statement Development Section 2. Literature and Product Review	• ISO13485 • FDA CFR 820.30 Subpart C
Design Process	• Concept Development • Engineering studies (may be used to refine Design Inputs in addition to concept testing, i.e.., exploration of problem to define critical technical parameters) • Risk analysis documents (dFMEA, aFMEA)	Section 3. Design Requirements and Specifications Section 4. Concept Generation and Selection Section 6. Failure Mode Effect Analysis (FMEA)	• ISO13485 • FDA CFR 820.30 Subpart C • ISO 14971
Design Output	• Final Product design and Specifications • Engineering drawings with tolerances on critical dimensions • CAD models and Prototypes • Bill of materials & Biocompatibility test matrix • Manufacturing & Assembly Instructions	Section 5. Solution Statement and Drawings	• ISO13485 • FDA CFR 820.30 Subpart C • ISO 14971 • ASME Y14.5 2009 (GD&T) • ISO 10993
Design V&V	• Validation & Verification Study plan • Test protocols and references • Bench, animal, human Studies • Test reports • Biocompatibility test strategy (if relevant and required)	Section 7. Testing Plan Section 8. Regulatory Aspects	• ISO13485 • FDA CFR 820.20 Subpart C • ISO 14971 • ISO 10993 • USP 788 • IEC 60601 (for electrical hardware devices)
All other documents such as meeting notes, design reviews, etc., should go into separate labeled Appendices.			



TABLE OF CONTENTS

EXECUTIVE SUMMARY **5**

SECTION 1: PROBLEM STATEMENT AND CLINICAL NEED STATEMENT DEVELOPMENT **5**

1.1 Description of Team's Understanding of the Problem 5

1.2 Initial Problem Statement 6

1.3 Initial Clinical Need Statement 6

SECTION 2: LITERATURE AND PRODUCT REVIEW **6**

2.1 Supporting Observations 6

2.2 Summary of Clinical Problem 6

2.3 Summary of Current Solution Landscape 8

2.4 Assessment of Emerging Technology 9

2.5 Gap Analysis Matrix 10

2.6 Market Analysis 11

2.7 Refined Problem Statement 13

2.8 Refined Clinical Need Statement 13

SECTION 3: DESIGN REQUIREMENTS AND SPECIFICATIONS **13**

3.1 Target Customer and Rationale 13

3.2 User requirements 14

3.3 Summary Table of Design Specifications 16

SECTION 4: CONCEPT GENERATION AND SELECTION **16**

4.1 Concept Generation 16

4.2 Idea Organization 16

4.3 Final Solution Selection 19

SECTION 5: SOLUTION STATEMENT AND DRAWING **21**

5.1 Final Problem Statement 21

5.2 Final Clinical Need Statement 21

5.3 Solution Statement 22

5.4 Drawings of Prototype Solution 23

5.6 Functional Block/Subcomponent Diagram or Flowchart 26

SECTION 6: FAILURE MODES AND EFFECTS ANALYSIS (FMEA) 27

SECTION 7: TESTING PLAN 28

7.1 Tests Performed and Objectives 28

7.2 Testing Methods 30

7.3 Results summary 30

SECTION 8: REGULATORY ASPECTS 31

8.1 Intended Product Application 31

8.2 Summary of Similar and/or Comparable Products 31

8.3 Regulatory Agency 32

8.4 Product Classification for FDA regulated products 32

8.5 Regulatory Pathway Description 32

8.6 Overview of Research and Development (R&D) Strategy 33

SECTION 9: ETHICAL CONSIDERATIONS 34

9.1 Identifying Ethical Considerations 34

9.2 Recommended Solution 35

SECTION 10: INTELLECTUAL PROPERTY (IP) AND TECHNOLOGY TRANSFER 35

10.1 Memorandum of Understanding (MOU) for Confidentiality, Material Transfer, and Intellectual Property 35

10.2 Disclosure of IP 35

10.3 Title of Invention 35

10.4 Contributors 35

10.5 Description of IP 35

10.6 Project Funding 35

10.7 Student Team Member Contact Information Following Graduation 36

SECTION 11: PROJECT ABSTRACT 36

SECTION 12: REFERENCES 37



EXECUTIVE SUMMARY

This Design History File includes the generation of a novel device for the treatment of nasal valve collapse. NVC is a condition in which the cartilage of the nasal valve is weakened and is allowed to fold in on itself, generating symptoms that include difficulty breathing, fatigue, and headaches along with many others. The standard method of treatment is a functional rhinoplasty, which is a highly invasive procedure that requires anesthesia and several weeks of recovery. Alternative treatments include intranasal devices that temporarily restore air flow, but are often uncomfortable and/or externally visible. Additionally, they aren't usually designed to improve the nasal valve itself, but rather provide temporary support. To improve upon the deterrent factors of these available treatments, Treatment Masters has designed a multicomponent system that reestablishes adequate air flow and strengthens the nasal valve through generation of rigid scar tissue. The device comprises a polypropylene stent lined with biodegradable PLLA microneedles that facilitates the generation of scar tissue while also expanding the nasal cavity to permit air flow. This component is held in place with a stainless steel piercing rod, extending through the cartilage of the septum while remaining discrete. Treatment Masters recommends this solution for adoption as a senior design project, as it enhances upon current treatment methods while reducing invasiveness and patient discomfort.

SECTION 1: PROBLEM STATEMENT AND CLINICAL NEED STATEMENT DEVELOPMENT

1.1 Description of Team's Understanding of the Problem

Nasal valve collapse (NVC) is a medical condition that can cause the weakening of one or both of the internal and external nasal valves. This condition causes the narrowing or obstruction of the nasal airway causing symptoms such as difficulty breathing, mucus build-up, nose bleeds, snoring, headaches, etc. This can be caused due to genetics, injury, aging, or cartilage deterioration. This condition affects 67% of patients with sinonasal complaints which is the majority of complaints brought to otolaryngologists (ENT) [1]. Current devices that treat collapsed nasal valves are inefficient or too expensive. The current standard of treatment of nasal valve collapse is the performance of functional rhinoplasty. Functional rhinoplasty is performed to improve any breathing problems that the patients present. Functional rhinoplasty is a surgery that focuses on improving the efficiency of air intake per breath by reshaping the nose structure. NVC surgery entails the auto or homologous transplantation of cartilage graft(s) that is reformed and inserted into the nose to reinforce the damaged valves. These grafts are sutured onto the internal/external valve helping the valve straighten out and stop it from collapsing inwards. There are multiple non-invasive treatments available for NCV. However, most of the non-invasive treatments are externally visible and must be worn in order to relieve symptoms. Most of the non-invasive treatments are not permanent and do not resolve the collapsed valve.

1.2 Initial Problem Statement

The problems with the current collapsed nasal valve treatments are that they are ineffective or too expensive for the majority of the population. Furthermore, non-invasive solutions are externally visible, decreasing the comfort levels of the patients.

1.3 Initial Clinical Need Statement

There is a need for a minimally invasive nasal dilator that is able to support and permanently correct the collapse of the internal and/or external nasal valve.

SECTION 2: LITERATURE AND PRODUCT REVIEW

2.1 Supporting Observations

Not applicable to this project.

2.2 Summary of Clinical Problem

Nasal valve collapse (NVC) is a condition that is developed when the cartilage making up the nasal valve is weakened and collapses in on itself, forming an obstruction in the nasal pathway. This most often results in difficulty breathing and patient discomfort. The nasal valve is the most narrow part of the airway, so even slight narrowing of the airway can result in symptoms consistent with this condition. This most often occurs as a result of nasal surgery or significant trauma to the nose [2]. There are two main types of nasal valve collapse. Internal nasal valve collapses are most common, where the cartilage between the skin and the respiratory epithelium is weakened, providing a large amount of respiratory resistance. External valve collapses are less common, resulting from the weakening and collapse of the columella (skin/cartilage dividing the nostrils), nasal floor, and/or nasal rim of the patient.

Medical Device or Therapy Design

I. Anatomy and Physiology:

The nasal cavity contains 2 nasal valves: The internal nasal valve and the external nasal valve. The main function of the nasal valves is to provide maximum nasal flow resistance to airflow. The internal nasal valve resides between the nasal septum and the lowest portion of the upper lateral cartilage. While the external nasal valve, the narrowest section of the nasal airway, resides in the middle to lower part of the nose [3][4].

II. Pathophysiology:

A nasal valve collapse is often due to either nasal trauma or a prior nasal surgery. This results in a collapse in the internal nasal valve at the point where the upper lateral cartilage and the septum meet. This is an extremely narrow area, and even the smallest decrease in diameter can cause major obstruction, resulting in symptoms of nasal valve collapse. Furthermore,

patients that have had no history of nasal trauma or surgery, most likely have weak nasal sidewall cartilages, causing the nasal valve to collapse [5].

III. Clinical Presentation:

For patients with severe nasal valve collapse and need surgery, the state of the patient will not be critical. They will have difficulty breathing, but will not require an emergency room [6].

IV. Clinical Outcomes:

As a result of a nasal valve collapse, patients can expect symptoms such as nasal obstruction, congestion, difficulty breathing from the nose, bloody nose, crusting around the nostrils, and snoring [7][8]. (reference)

V. Epidemiology:

Nasal airway obstruction affects more than 20 million americans. Furthermore, Nasal valve collapse affects 67% of patients with sinonasal complaints which is the majority of complaints brought to otolaryngologists. The most common causes of nasal valve collapse are nose trauma, aging, inflammation, scar tissue, weak nasal cartilage, and complications after a nose surgery. Over the years, technology and medicine have been improving, allowing for inexpensive and permanent treatments [9][10]. (reference)

VI. Economic Impact:

As of 2020, the current market value of Nasal valve collapse surgery, also known as functional rhinoplasty, is approximately $6.2 billion USD [11][12].

2.3 **Summary of Current Solution Landscape**

Table 1. Current Treatments

Treatment	Device	Class	Description	Advantages	Disadvantages
Functional Rhinoplasty [13]	n/a	II	surgery that involves modifying the external/outside nasal structures in order to help enhance nasal breathing	provides a permanent solution, simple procedure	possible infection, bleeding, swelling, scarring, numbness, skin discoloration, undesirable changes of nasal appearance
Nasal Implant	Latera Absorbable Nasal Implant [14]	II	Thin implant with a forked end and a ball tip end made of absorbable PLLA.	absorbable, temporary (~ 24 months) , reduce nasal blockage	discomfort due to implant, inflammation and bruising could occur, mild pain or irritation
Nasal Dilator	Nasal Dilator [15]	I	spiral expansion frame with windings in the vertical direction over a wide range made of an elastic material that is placed into nostril	removable, simple design, easy to insert, pressure placed by the device is able to keep the nostril open, the pressure is spread through the nostril reducing damage or irritation, does not have an open frame which could catch internal tissue,	does not provide a permanent solution, can be spotted externally, irritation or damage of tissue could occur
Grafts	Bioabsorbable multilayer nasal	II	Implantable biodegradable	absorbable, temporary (~	discomfort due to implant,

	valve spreader graft [16]		plates that have tissue ingrowth properties	6-12 months), adapted to fit and compress bone, decrease risk of infection and extrusion	possibility of inflammation and bruising

2.4 **Assessment of Emerging Technology**

Most of the emerging technologies for nasal valve collapse treatments are focused on lowering the cost of treatment while improving efficacy and finding new non-invasive approaches to solve this problem. Many big-name medical device companies and institutions are researching different methods to create a treatment that is not only minimally-invasive and completely internal, but also cost-effective so the majority of the population can have access to it.

One of the most effective solutions on the market right now is the Latera absorbable nasal implant created by a company called Stryker. This new technique to treat dynamic nasal valve collapse uses an absorbable nasal implant composed of a 70:30 blend of poly (L-lactide) and poly (D-lactide) to support the upper and lower cartilage inside the lateral wall of the nasal cavity [17]. The implantation itself is minimally invasive and study by the Stryker ENT shows that the effectiveness of the implant is stable up to 2 years after the procedure [17]. These same studies also show that 80% of patients had the symptoms of their nasal airway obstruction resolved in only 3 months after initial implantation. While these studies confirm that the Latera implant is biocompatible, minimally invasive, and the implantation procedure is fairly easy, the initial studies are unable to provide enough information to determine whether these implants are effective due to their lack of a control.

The Stryker ENT conducted another randomized study to determine the effectiveness of the Latera implant compared to a sham control procedure. A select number of patients were given the in question implant and the others were given a sham control arm to determine if the Latera implant was in fact more effective than the control. After three months, the responder rates for the randomized arms were analyzed. The primary endpoint of this study determined that the responder rates for the Latera implant were significantly higher than in the sham control group as can be seen in figure 1 below. The patients with the implant report their nasal airway obstruction symptoms feeling significantly better when compared to the control group which experienced much less relief.

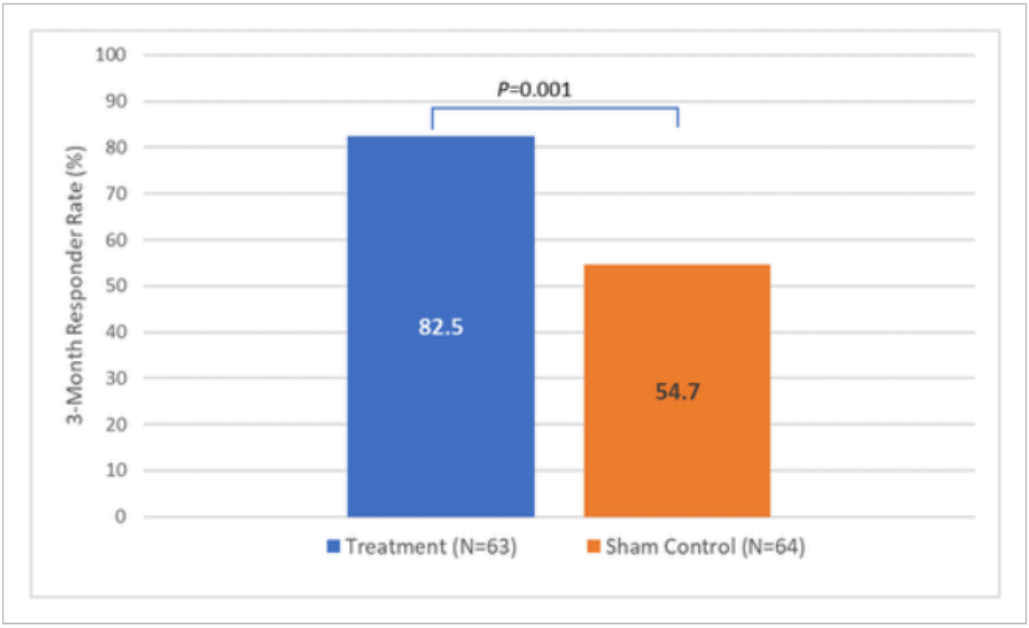

Figure 1 . *Representing the Primary endpoint of the study: comparison between study arms for 3-month responder rate. A p value < 0.025 indicates there is statistical significance. Results show Implant treatment is superior to sham control.*

This study concluded that the Latera implant significantly improves patients nasal collapse symptoms when compared with a sham, demonstrating that the implant is a superior treatment. The minimal invasiveness actually helps reduce the cost of treatment by not requiring extensive surgery and minimizes patient discomfort or pain that may come with a normal procedure. Treatment Masters wants to come up with a new implant or device that is able to not only provide the minimally invasive qualities and bioabsorbable factor of the Latera implant, but also aim to make the procedure even less invasive while producing more efficient results of resolving nasal valve collapse.

2.5 **Gap Analysis Matrix**

As of right now, there are two main types of treatment options for patients with a nasal valve collapse: invasive surgeries and non-invasive devices. Generally, invasive surgeries are ineffective and overly expensive, and non-invasive nasal dilator devices are externally visible and uncomfortable to use. In addition, neither of these options prove to be a permanent solution in correcting a collapsed nasal valve, providing room for further development. Specifically, there is a gap in the market for a device that is both cost-effective and minimally invasive. This means that the cost of this device must be justified by its ability to effectively treat nasal valve collapse, and that it should be implantable without invasive procedures. Ultimately, this leads to the realization that a device exhibiting both these qualities has the potential for significant success in the market.

2.6 **Market Analysis**

As of 2020, the current market size of functional rhinoplasty is approximately $6.2 billion USD. The market is expected to expand at a compound annual growth rate of 6.5% from 2021 to 2028. The main competition for functional rhinoplasty surgery are non-surgical options for a nasal valve collapse. However, through technological advancements of these non-surgical options, the market can grow. The current most prominent companies within the market include Stryker, Grover Aesthetics, Sunset Cosmetic Surgery, Implantech, GC Aesthetics, Surgiform Technologies LLC. The advantages of using non-surgical techniques over a functional rhinoplasty include cheaper cost, decreased risk and decreased number of mistakes leading into another treatment to correct the primary treatment. Unlike non-surgical options, rhinoplasty can involve multiple surgeries, where patients undergo a secondary surgery to correct the deformations caused by the primary rhinoplasty surgery. Furthermore, due to this, the number of revision rhinoplasty increased around the world, increasing risk and cost for the patient. According to American Academy of Facial Plastic and Reconstructive Surgery, in 2018, about 94% of the surgeons performed a revision rhinoplasty [12].

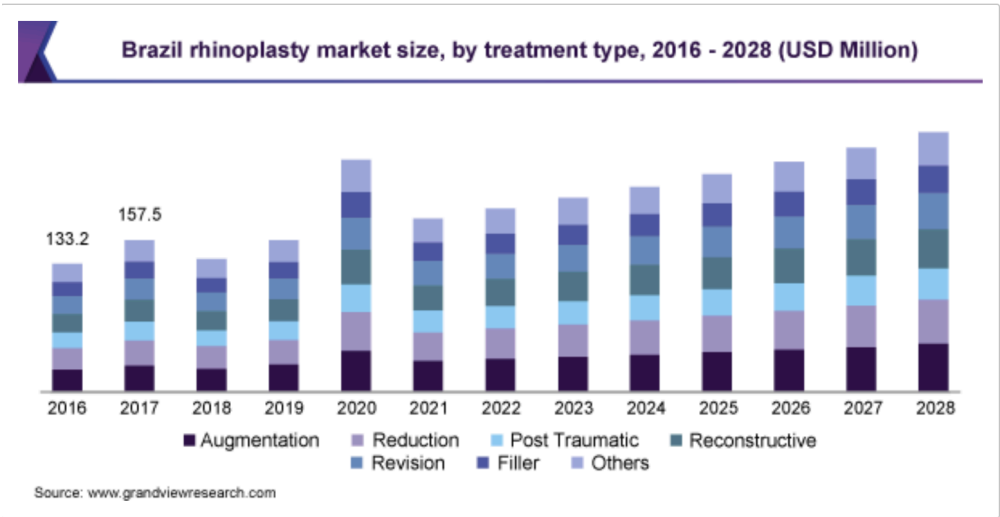

***Figure 2**: Market size between 2016-2018 in Brazil*

In terms of cost, non-surgical options can provide a lower total cost. The basic cost of a functional rhinoplasty includes anesthesiologist fees, surgeon's fees, outpatient surgical center fees, labs and other associated medical test fees (if applicable), medication following surgery, and any extra costs due to traveling or being absent from work [18] . Depending on the type of anesthesia, it would cost greater than or equal to $500 for a local anesthesia or would cost between $1500 and $3500 for a general anesthesia [19]. The rest of the costs would depend on both the region and surgical center. Solely the cost of a functional rhinoplasty could range anywhere between $3500 to $15,000 [20]. Functional rhinoplasty surgery does not require the patients to stay at the hospital overnight, therefore, the patient

would only need to be absent from work on the day of the surgery and for any follow up visits after the surgery. However, patients are instructed to take 2 weeks off from work after the surgery to recover. So in total the patient would need to leave work on the day of the surgery, take off for 2 weeks after the surgery and visit the surgeon either once per month or once per 3 months until a year after the patient's surgery [21]. . An average american makes about $190.88 per day, therefore the monetary loss due to absentee was found to be $4772.00 [22] . Thus, the net total cost of the disease on the system at large was found to be between $8272 and $19,772. However, depending on the insurance of the patient, the insurance could either cover all or a portion of the costs of the procedure [20].



***Figure 3**: Pie chart of Market size globally*

Table 2: Total Market value globally

Report Attribute	Details
Market size value in 2021	USD 4.7 billion
Revenue forecast in 2028	USD 7.3 billion
Growth rate	CAGR of 6.5% from 2021 to 2028
Base year for estimation	2020
Historical data	2016 - 2019
Forecast period	2021 - 2028
Quantitative units	Revenue in USD Million and CAGR from 2021 to 2028
Report coverage	Revenue forecast, company share, competitive landscape, growth factors, and trends
Segments covered	Treatment type, technique, region
Regional scope	North America; Europe; Asia Pacific; Latin America; Middle East & Africa

2.7 **Refined Problem Statement**

Current nasal valve collapse treatments are focused in two categories; invasive and non-invasive. Invasive treatments are often ineffective or are too expensive for the majority of the population, and non-invasive treatments are generally externally visible and are uncomfortable for a patient to use.

2.8 **Refined Clinical Need Statement**

Design a medical device for treating nasal valve collapse that is both non-invasive, meaning it can be applied inside the nasal airway without surgery, and cost-effective, meaning a majority of the population can afford it and the treatment itself is effective in the long term.

SECTION 3: DESIGN REQUIREMENTS AND SPECIFICATIONS

3.1 **Target Customer and Rationale**

Our target customers for the absorbable microneedle nasal dilator target are Ear, Nose, and Throat doctors, plastic surgeons, private practices, and hospitals. ENT doctors and plastic surgeons are the people that specialize in diagnosing, and treating nasal valve collapses so our device will be made with

the device users and the patients. If the patients and doctors choose to use this device over others on the devices on market it would give an incentive for hospitals and clinics. The number one option for resolving a collapsed nasal valve is surgery. Our device allows for more physicians aside from surgeons to be able to treat nasal valve collapses outside of an operating room. Additionally, this option gives patients a minimally invasive procedure for those who do not want or can afford a functional rhinoplasty further encouraging hospitals and clinics to purchase our device.

3.2 **User requirements**

Table 3: User Requirements

User Requirements	Source
The device must be non-invasive	Dr. Biswas
Minimize patient pain	Dr. Biswas
Produce an inexpensive device	Dr. Biswas
The device must fit in the inside of the nasal airway and not visible externally	Dr. Biswas

BIOMEDICAL ENGINEERING
TEXAS A&M UNIVERSITY

Legend		
⊖	Strong Relationship	9
O	Moderate Relationship	3
▲	Weak Relationship	1
++	Strong Positive Correlation	
+	Positive Correlation	
—	Negative Correlation	
▼	Strong Negative Correlation	
▼	Objective Is To Minimize	
▲	Objective Is To Maximize	
×	Objective Is To Hit Target	

Table 4: House of Quality Matrix

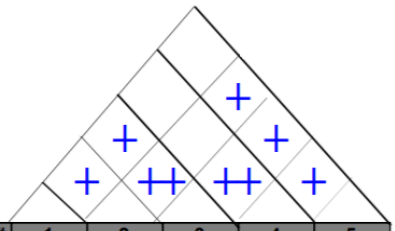

Row #	Max Relationship Value in Row	Relative Weight	Weight / Importance	Demanded Quality (a.k.a. "Customer Requirements" or "Whats")	1 No Sugery Requirement	2 Device Cost	3 Device Components	4 Scar Tissue Generation	5 Absorbable Material	Competitive Analysis: Treatment Masters	Competitive Analysis: Stryker	Competitive Analysis: Ethicon, Inc.
				Column #	1	2	3	4	5			
				Direction of Improvement: Minimize (▼), Maximize (▲), or Target (x)	▲	▼	▲	▲	▲			
				Quality Characteristics (a.k.a. "Functional Requirements" or "Hows")								
1	9	15.2	10.0	Minimally invasive Procedure	⊖	O	⊖			5	3	0
2	9	12.1	8.0	Minimized Patient Discomfort	⊖				⊖	4	5	0
3	9	10.6	7.0	Temporary Use			⊖	⊖	⊖	4	5	0
4	9	7.6	5.0	Permanent Solution		O	⊖	⊖		3	4	5
5	9	13.6	9.0	Relatively Inexpensive	O	⊖	O			5	3	0
6	9	13.6	9.0	Internal Application			⊖	O	O	5	4	1
7	9	12.1	8.0	Easy Post-Procedural Care	⊖	O				5	3	0
8	9	15.2	10.0	Valve Structural Support			⊖	⊖	▲	5	4	5
				Target or Limit Value	None	$10,000	3	12 mo.	100%			
				Difficulty (0=Easy to Accomplish, 10=Extremely Difficult)	4	2	1	6	9			
				Max Relationship Value in Column	9	9	9	9	9			
				Weight / Importance	259.1	227.3	600.0	340.9	260.6			
				Relative Weight	15.4	13.5	35.5	20.2	15.4			

3.3 **Summary Table of Design Specifications**

Table 5: Design Specification

Customer or societal need	Design Specification
Minimally Invasive to reduce patient pain	The device is made up of hundreds of microneedles that are 2mm in length
Non-visible externally and fits in nasal airway	The device has a length of 1 inch, a diameter of 10-12 mm and a septum piercing that is half an inch in length.
Inexpensive device	The device's supporting mesh is made up of polypropylene, the microneedles are made of PLLA, and the nasal piercing is made up of stainless steel. All materials are low in cost and retally available
Easy aftercare	The device requires no recovery time just maintenance of septum piercing to prevent infection

SECTION 4: CONCEPT GENERATION AND SELECTION

4.1 **Concept Generation**

1. Injectable shape memory polymer that can correct the collapsed nasal valve.
2. Cylindrical device that seals the nasal airway such that air can only flow through the device.
3. Use of PLLA to make the device absorbable
4. Looped nose ring like device that would correct the collapsed nasal valve
5. Use of microdermal needles to promote fibrous collagen production and generate rigid tissue to support the collapsed valve.
6. Use of kevlar fiber to function as artificial cartilage to replace the collapsed valve.
7. Use of an internal thin cylindrical mesh to increase comfort and support.

4.2 **Idea Organization**

Table 6: Design Solution Idea Organization

Design #	Principle Gap	Potential Biases	Solution Approach	Commonalities
1	Rejection of the polymer could be an issue.	Focusing on a permanent quick solution could cause an overlook of procedure	Different procedures. Absorbable polymer, PLLA.	This can be combined with Design 2, by making the cylindrical device

		safety.		out of the shape memory polymer
2	Additional discomfort may be introduced to patients. Similar design concepts already available in the market.	Provides an efficient temporary solution without permanent effects.	Use of thin shape memory polymer to increase flexibility at body temperature.	Integrate with Design 1 to produce a more comfortable solution.
3	Rejection of the polymer could be an issue	Focusing on a permanent quick solution could cause an overlook of procedure safety	As a part of Design 5. To ensure the amount of polymer used is not harmful to patient	Integrated into Design 5 by making the microdermal needles out of PLLA
4	Placement of the nose ring would be difficult and could obstruct nasal cavity	Provides a temporary solution with semi permanent effects due to septum piercing	Redesign nose ring so it can easily be placed into the nasal airway	Reshaped nose ring so it can be integrated with design 7 as a support for the mesh
5	Irritation or injury of the skin or rejection of the needles could be an issue	Focusing on a permanent quick solution could cause an overlook of procedure safety	Design the needles such that they are absorbable and stay in place to prevent injuries. Combined with Design 3 and Design 7.	Integrated with Design 3 to increase absorbability and integrated with Design 7 to increase stability
6	Rejection of the fiber could be an issue.	While focusing on improving the structural integrity of the damaged tissue, procedure could become majorly invasive.	Incorporate the fiber into an external device to avoid surgical procedure.	Kevlar fiber can be integrated with Design 4 to form a cartilage-like support in the nose with an easy procedure.

7	Similar design concepts already available in the market. Could cause irritation if the skin gets caught in the mesh.	The device provides both comfort and stability but does not provide a permanent solution	Incorporate with Design 5 to provide a more permanent solution to the nasal valve collapse	Integrated with Design 5 for a more permanent solution

4.3 **Final Solution Selection**

Table 7: Pugh Matrix for Solution Alternatives

Pugh Matrix

Concept Legend Better + Equal = Worse -		Solution Alternatives						
Key Criteria	Importance Weight	Multiple microdermal Needles	Biodegradable Needles	Kevlar Fiber	Injectable Shape memory polymer	Thin cylindrical mesh	Sealed cylindrical device	Nose ring
Minimally Invasive Procedure	10	+	+	=	+	+	+	+
Minimized Patient Discomfort	7	+	+	=	+	+	-	+
Temporary Use	4	+	+	=	=	-	-	=
Permanent Solution	5	+	+	=	=	-	-	=
Relatively Inexpensive	9	+	+	-	+	+	+	+
Internal Application	8	+	+	=	+	+	+	+
Easy Post-Procedural Care	7	+	+	=	+	+	+	+
Valve Structural Support	10	+	+	+	+	+	+	+
Sum of Positives		8	8	1	6	6	5	6
Sum of Negatives		0	0	1	0	2	3	0
Sum of Equals		0	0	6	2	0	0	2
Weighted Positive Sum		60	60	10	51	51	44	51
Weighted Negative Negative		0	0	9	0	9	9	0
Total Score		60	60	1	51	42	35	51



The pugh matrix shown above was used to analyze different criterions for our Nasal Valve Collapse treatment device and rating them on their level of importance on a scale from 1-10. The two key criteria for our device is that it provides long term structural support for the collapsed valve and that the implanting procedure is minimally invasive. Many of the current treatment options are unable to provide stable structural support to the collapsed nasal valve without using an invasive procedure or a device that is externally visible. There is still room for improvement in this area and this is why both the valve structural support criterion and minimally invasive procedure criterion were given an importance rating of a 10. Another important criterion for our device, that was given an importance rating of 9, is making it relatively inexpensive. Majority of the long term solutions for nasal valve collapse involve invasive surgical procedures that are both costly and in some cases ineffective. Stemming from this, many of the current non-invasive treatments are externally visible and uncomfortable for patient use, that is why the use of an internal application was given an importance rating of 8. The criterion of minimizing patient discomfort was given an importance rating of a 7. As previously stated, many of the current solutions require invasive, painful procedures or uncomfortable externally visible nasal dilators. With surgery, extensive post-procedural care is often needed and patients still recovering from the procedure usually don't have the strength to carry out these tasks and this is why ensuring easy post-procedural care was given an importance rating of a 7 as well. As for the effectiveness of our device, we are hoping to ensure a permanent solution for a collapsed nasal valve and give this criterion an importance rating of a 5. Many of the current solutions that are able to provide long-term solutions involve extensive procedures, so we aim to provide a permanent solution without the inconvenience of surgery. The final criterion we wanted our device to meet was to be of temporary use. It was given an importance rating of a 4. We hope to be able to provide a long term solution through the use of a temporary device. Different components of our hypothetical device were assigned a + if they met the key criteria we defined in the pugh matrix, or a - was assigned if they did not meet the criteria. A = was assigned to the components that didn't have any substantial data to decide whether or not they meet the criteria defined earlier in the pugh matrix. The + and - values were multiplied with the importance ratings of each criteria to get a weighted negative and weighted positive sum value. These values are then multiplied together to give the total value for each of the defined components. After analyzing the results gathered from the pugh matrix, our team decided on incorporating multiple bioabsorbable micro dermal needles into the device as well as a thin cylindrical mesh and nose ring component.



SECTION 5: SOLUTION STATEMENT AND DRAWING

5.1 Final Problem Statement

A persistent issue is that effective solutions affordable for the majority of the population are still not available. Corrective surgery for nasal valve collapse can cost thousands of dollars before taking into consideration operating facility or anesthesia expenses.

In addition, current treatment options for NVC lack the ability to provide structural support to the collapsed nasal valve without an invasive procedure or use of visible devices. The most common surgical procedure done to treat NVC, functional rhinoplasty, is majorly invasive and results in painful bruising due to either bone or cartilage modification. Patients who opt out of surgery have the alternative to use nasal dilating devices but they are often externally visible and uncomfortable to use. Another issue continuously present is that current treatment options for NVC are not always effective. Functional rhinoplasty can cause additional trauma to the affected tissue and pose additional risks post-operation. External devices used for support require their constant presence in the nasal cavity, providing only a temporary solution without improving the condition of the collapse nasal valve.

The problem remains in finding an affordable and effective method to provide and improve the structural integrity of the collapsed nasal valve while improving patient quality of life since it is not being achieved through the current treatment methods available.

5.2 Final Clinical Need Statement

The clinical need relies on patient comfort and overall quality of life. While NVC is not a life-threatening condition, living with a collapsed nasal valve can be extremely uncomfortable and lead to persistent symptoms such as chronic fatigue, nasal blockage, or snoring due to a lack of proper air flow. Noninvasive devices that are currently available do not meet the standard for long-term use, meaning that surgery is one of the only permanent solutions for people living with this condition. However, as stated in the problem statement, surgical procedures can be expensive and painful while the temporary solutions are often uncomfortable and undesirably visible.

Consequently, there is a need for a device that can provide structural support to the collapsed nasal valve in a discrete, non-invasive, and comfortable manner to maximize patient quality of life. The final design would need to provide structural support to the nasal valve and have the ability to leave permanent results without permanent need for the device's presence inside the nasal cavity. .

Therefore, the overall challenge in this case is to design a device that can provide structural support from within the nose without any visible differences. The device should improve the overall rigidity of the nasal valve so that the device can be eventually removed and the underlying structure of the valve can be maintained. Both the application and removal of the device should also be minimally invasive

procedures that require little to no recovery time. As cost and affordability remain a large concern, the device must provide an affordable alternative in both surgical and device costs.

5.3 **Solution Statement**

Date: 4/4/2021

The first problem to address is the cost of NVC treatment and provide an affordable alternative to corrective surgery. Therefore, the device must be small and wearable with the capacity to support the collapsed valve and facilitate air flow without requiring a surgical procedure. Removing the need for a surgical procedure would eliminate additional expenses such as operational facilities and anesthesia that make NVC treatment unaffordable to the majority of the population. In addition, to ensure the low cost of both the device and application procedure, the device must be manufactured from relatively inexpensive polymers and be designed to function similarly to a conventional nasal dilator.

Date: 4/5/2021 (Supplemental)

To reduce patient discomfort, the device should have a thin lining that will not obstruct airflow. The device must also be discrete, meaning that it can be worn inside the nose without any external visibility. To lessen visibility, the device must not only be worn inside the nose but be secured from within the nasal cavity.

Date: 4/6/2021 (Supplemental)

To improve the quality of life of the patient and provide effective results, the device should enhance the structure of the existing tissue while providing support and ample air flow throughout the healing process. Enhancing the tissue's integrity would eliminate the need for permanent use of the device but be able to provide long-lasting or permanent results.

5.4 **Drawings of Prototype Solution**

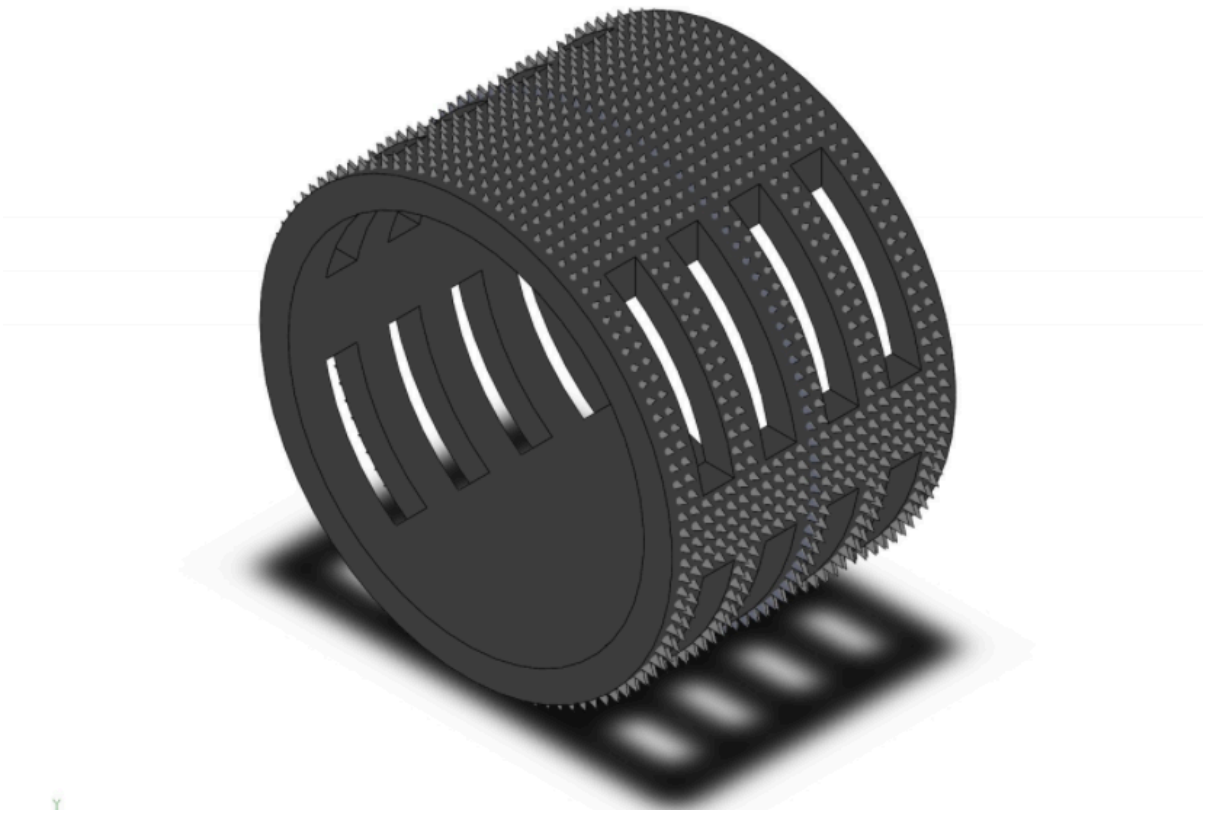

Figure 4. *SolidWorks Model of Absorbable Microneedle Nasal Dilator. Isometric view of mesh component with PLLA microneedles.*

The main device is a cylindrical polypropylene mesh measuring between 10-12mm in diameter. The mesh is further secured in place by a collection of PLLA microneedles located on its surface measuring 2mm in length and 1mm in diameter. These needles promote the growth of rigid scar tissue throughout this portion of the nasal valve. This scar tissue, once fully matured, will be able to maintain its structural integrity after device removal and provide permanent structural support to the previously collapsed nasal valve.

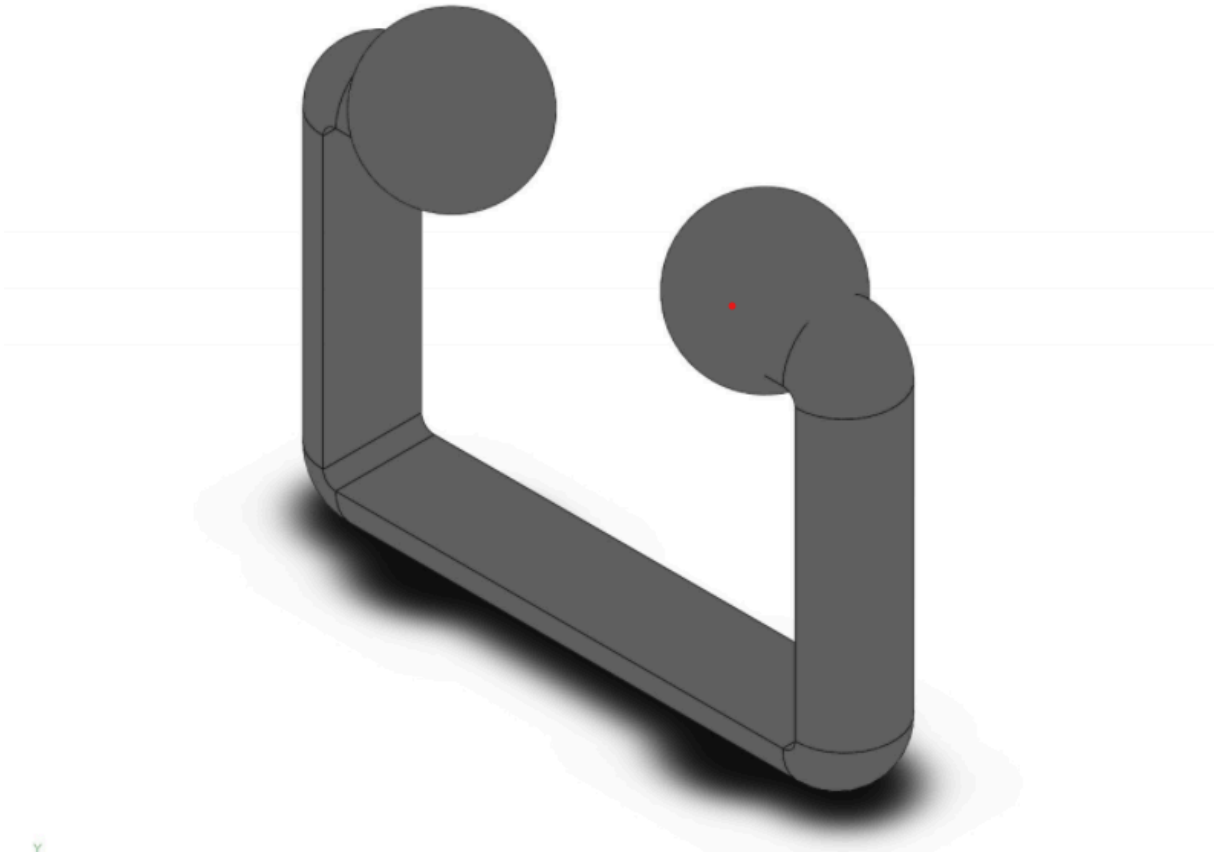

Figure 5. *SolidWorks Model of Absorbable Microneedle Nasal Dilator. IIsometric view of Stainless Steel Support Rod*

The second apparatus is a stainless steel rod that will be pierced through the cartilage of the septum, and exists entirely for support of the device to secure it in place. The support rod can be implanted while the patient is awake and does not result in long-lasting or excessive pain and bruising, as is common with a functional rhinoplasty.

To maximize patient comfort the mesh device will be thin and the steel rod strategically placed to facilitate concealment and reduce the probability of the device restricting airflow.

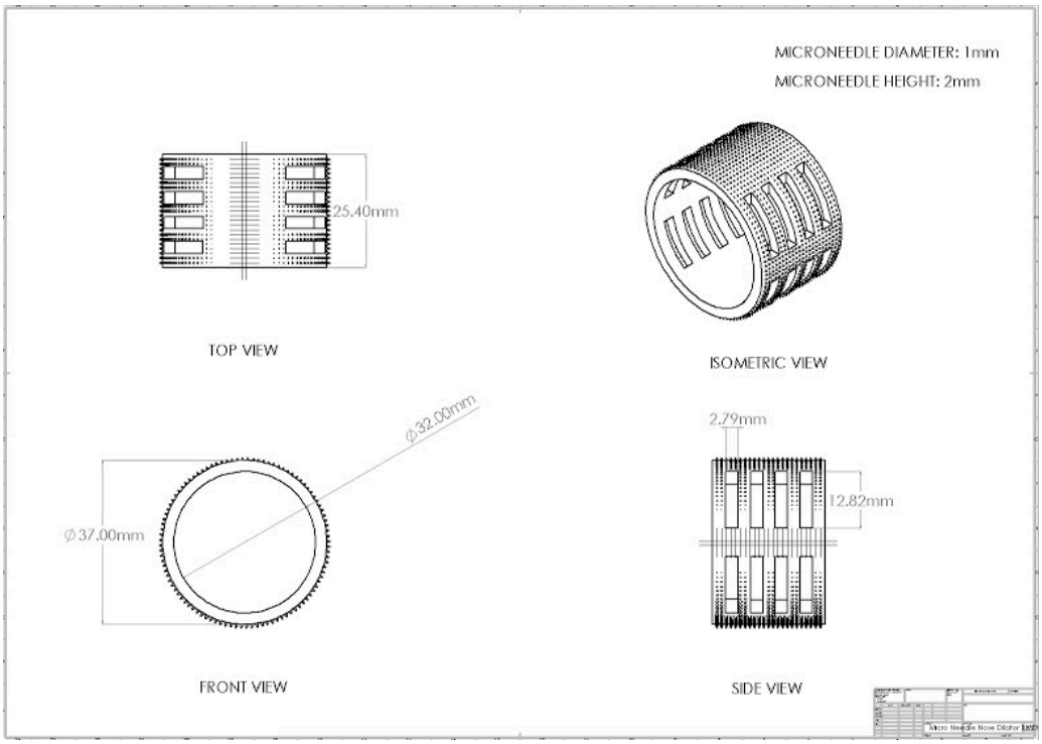

Figure 6. *Exploded SolidWorks Model of Absorbable Microneedle Nasal Dilator*

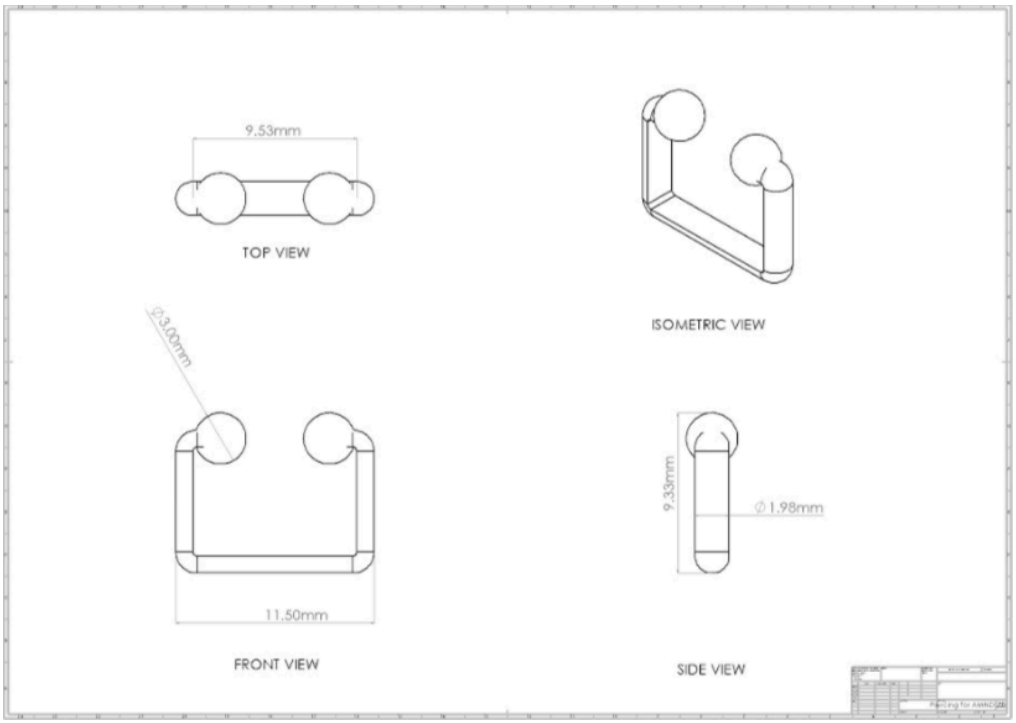

Figure 7. *Exploded SolidWorks Model of Stainless Steel Support Rod*

5.5 **Functional Block/Subcomponent Diagram or Flowchart**

Table 8: Subcomponent Descriptions

Subcomponent Title	Technical Description	Contributing discipline/skillset	Design Specification Addressed
Stainless Steel Support Rod	The stainless steel rod that will be pierced through the cartilage of the septum measuring 11.5 mm in exterior length and 9.53mm in internal length.	**Mechanical**	Discrete and minimally invasive valve stabilization
Polypropylene Mesh	Cylindrical polypropylene mesh measuring between 10-12mm in diameter.	**Mechanical**	Structural support to the collapsed cartilage
PLLA Microneedle	PLLA microneedles located on the surface of the mesh measuring 2mm in length and 1mm in diameter.	**Materials**	Improve structural integrity of existing tissue for permanent results

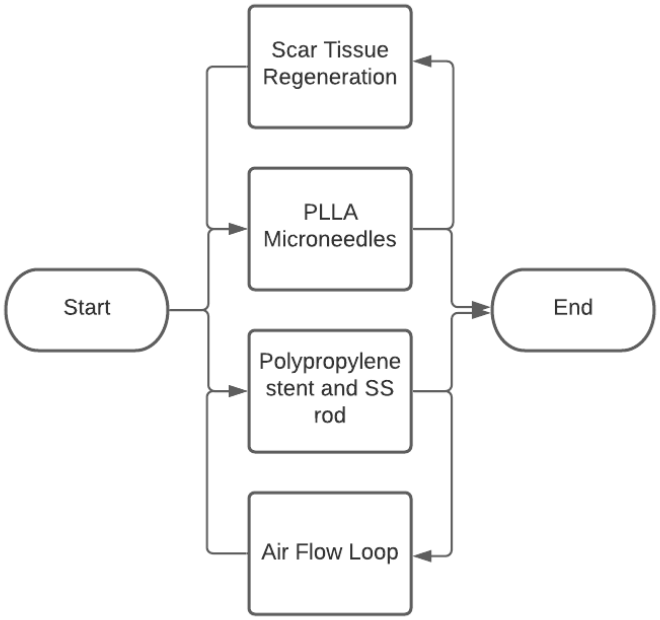

Figure 7: *Flow Diagram of Components*



SECTION 6: FAILURE MODES AND EFFECTS ANALYSIS (FMEA)

The overall major problems associated with our device are; possible device defects, abnormal scar tissue growth, movement or displacement of the metal support rod, and the possibility of an infection. Infection associated with the metal rod supporting the device, the non proper care of the piercing of the metal rod, sterilization of the device and the mesh stent. The PLLA microdermal needles will be integrated into the mesh and will be stabilized to prevent movement and to ensure abnormal scar tissue growth does not occur. Furthermore, regular checks with the ENT should be performed to ensure that the device is properly placed and the scar tissue growth is occurring normally. The possible causes of infection will be relieved by making sure the device is sterilized, the patient knows how exactly they should take care of the metal rod piercing, and lastly prompt good sterilization techniques when placing the device into the nasal cavity of the patient. The depth of the penetration is a major problem, as proper scar tissue growth, to restore the collapsed nasal valve, would not occur, which could possibly injure the patient or render the device invalid. The depth of the penetration will be improved by accurately measuring and testing the depth needed to properly penetrate through the dermis layer and have normal scar tissue growth which will correct the collapsed nasal valve.

Table 9. FMEA Analysis

FMEA Worksheet

Project	Final Design	**Date**	04/25/2021		
Product	NVC treatment	**Version**	1		
Author	Treatment Masters	**Sheet**	1	**of**	1

FMEA Analysis										Result after Action				
Process Function	**Potential Failure Mode**	**Potential Effect of Failure**	**Severity**	**Potential Cause of Failure**	**Occurance**	**Project Controls to Detect Failure**	**Detection**	**RPN**	**Agreed Action**	**Action Taken**	**Severity**	**Occurance**	**Detection**	**RPN**
Testing process	N/A	8 Render the product or service unfit for use	8	10 More than once per day	10	10 Defect caused by failure is not detectable	10	800	Design an appropriate testing protocol to ensure effectiveness of device and safety of all components	n/a	n/a	n/a	n/a	n/a
PLLA Microneedles	shallow penetration, inability to degrade	5 Cause a loss of performance which is likely to result in a complaint	5	4 Once per year	4	10 Defect caused by failure is not detectable	10	200	Ensure effectiveness during clinical trials	n/a	n/a	n/a	n/a	n/a
Polymer Mesh	Could catch or pinch the skin causing irritation	3 Cause a minor nuisance, but be overcome with no performance loss	3	6 Once every 3 months	6	1 The defect is obvious and can be kept from affecting the customer	1	18	Not proceed with application until new non-defective is avialable	n/a	n/a	n/a	n/a	n/a
Metal Support Rod	Could cause mild discomfort and move, or cause inflammation at piercing site	7 Cause extreme customer dissatisfaction	7	7 Once per month	7	6 Units are manually inspected with error-proofing modifications	6	294	ENT/Specialist check-in to ensure infection is not evident	n/a	n/a	n/a	n/a	n/a
Manufacturing	Device defects	8 Render the product or service unfit for use	8	10 More than once per day	10	6 Units are manually inspected with error-proofing modifications	6	480	Follow manufacturing protocols	n/a	n/a	n/a	n/a	n/a
Sterilization	cause an infection	7 Cause extreme customer dissatisfaction	7	4 Once per year	4	6 Units are manually inspected with error-proofing modifications	6	168	Perform a mandatory sterilization procedure using ethylene oxide	n/a	n/a	n/a	n/a	n/a
Microneedle fracture	Cause discomfort	10 Injure a customer or employee	1	3 Once every 1-3 years	3	1 The defect is obvious and can be kept from affecting the customer	1	3	ENT/specialist check-in to ensure the needles and the device are all in place	n/a	n/a	n/a	n/a	n/a
Scar tissue generation	Failure to promote tissue generation, abnormal tissue generation	8 Render the product or service unfit for use	8	3 Once every 1-3 years	3	7 All units are manually inspected	7	168	ENT/Specialist check-in to ensure proper tissue growth is taking place	n/a	n/a	n/a	n/a	n/a

SECTION 7: TESTING PLAN

7.1 Tests Performed and Objectives

Device Component	Test Performed/Objective
PLLA Microneedle	Needle sharpness testing: Hypodermic needle testing to evaluate sharpness and ease of insertion.

	PLLA Cytotoxicity: Live/Dead assay to using endothelial cell and culture medium determine if PLLA causes cell death.
	PLLA Biodegradability: Degradation test in phosphate buffered saline to determine biodegradability under physiologic conditions PLLA Biodegradability: Subcutaneous implantation of PLLA implant under rodent dorsal tissue to later be removed and examined for surface degradation using scanning electron microscopy.
	PLLA Biocompatibility: Subcutaneous implantation of PLLA implant under rodent abdominal tissue to later be removed and examined using histologic techniques for signs of host response.
	Sensitization Test: In vivo rodent assay to assess allergic or sensitizing reactions of the epidermis and dermis to prolonged exposure of PLLA microneedle and the possibility of chronic toxicity.
	Tissue Generation: Subcutaneous implantation of PLLA implant under rodent abdominal tissue to later be removed and analyzed for collagen production using immunohistochemistry.
	Effectiveness in collagen production: Controlled clinical study to test the effectiveness of microneedling in stimulating collagen production of the nasal dermis.
PP Support Mesh	Mechanical Testing: Compressive, tensile, and shear testing to determine mechanical properties of mesh and its ability to withstand nasal stresses.

	Sensitization Test: In vivo rodent assay to assess allergic or sensitizing reactions of the epidermis to prolonged exposure of polypropylene mesh.
	Valve angle for improved airflow: Use of long-range optical coherence tomography to determine nasal valve geometry and quantify improved airway obstruction.

7.2 **Testing Methods**

Bench: For needle testing the methods used were based upon ISO 7864 which are standard testing protocols for hypodermic needle performance. Documentation ISO 10993 was used to establish the testing protocols for cytocompatibility of PLLA microneedles. Biodegradation testing protocols were established using ISO 14855 for disintegration of plastic materials. Lastly, mechanical testing procedures for the polymer materials were based off ISO 527, tensile testing for plastics.

Animal: Once again ISO 10993 was used to establish the testing methodology for biocompatibility, sensitization, and tissue generation. The same documentation was used to take into account the use of in vivo animal models by following the appropriate guidelines. Biodegradability testing for in vivo was based on ISO 10993 and ISO 14855.

Human: For the device's testing in clinical trials, ISO 14155 was used as a guideline. Documentation ISO 14155 includes standard protocol for the investigation of medical devices, good clinical practices, conduction and reporting of clinical investigations.

7.3 **Results summary**

Microneedle Testing: Needle sharpness testing is anticipated to yield results that display adequate needle sharpness and ease of insertion. Cytotoxicity testing of the PLLA microneedles should demonstrate no indication of cytotoxicity, and biodegradability testing of the material will allow for accurate assessment of treatment time with this device as well as display degradation of the needles when exposed to physiological conditions. Sensitization testing should indicate similar results as subdermal implantation for degradation testing in regards to the bioresponse from the test subject. These results should indicate minimal inflammation and host response to the device. Immunohistological evaluation of the implanted material for collagen production should indicate regeneration of tissue as scar tissue forms within the test subject near the implant.

Support Mesh Testing: Mechanical testing of the PP support mesh will indicate that the material is of adequate rigidity to support the collapsed nasal valve without providing discomfort to the patient. Sensitization testing will again allow researchers to evaluate the host response to the material and

indicate that it is appropriate for use in this application, generating minimal host response. Valve angle testing will indicate that the device design is adequate for insertion into the nasal cavity without obstructing the airway or hindering air flow.

SECTION 8: REGULATORY ASPECTS

8.1 Intended Product Application

Our absorbable microneedle nasal dilator is intended to provide structural support to the collapsed nasal valve, either upper or lower, while enhancing the structure of the existing tissue by stimulating rigid scar tissue formation. The device is intended to be discrete and stable without airflow obstruction by securing the thin polymer mesh from within the nose through the use of microdermal needles and support rod. The device will be for temporary use since the microdermal needles degrade over time and result in permanent tissue generation, allowing the mesh and support rod to be removed after.

8.2 Summary of Similar and/or Comparable Products

Table 10: List of Comparable Products

Comparable Product	Manufacturer	Classification	Similarities/Differences
LATERA Absorbable Nasal Implant System	Stryker	Class II	Similarities - Use of absorbable PLLA - Stimulate collagen production Differences - Fibrous encapsulation - implant requirement
SkinPen Precision System	Bellus Medical, LLC	Class II	Similarities - microneedle components - Stimulate collagen production Differences - Technological characteristics
MAXAIR Nasal Dilator System	HNL Technologies	Class I	Similarities - Enhance air flow through the nose - Internally worn inside the nostrils Differences

			- Complexity - Temporary results - Permanent use

8.3 **Regulatory Agency**

The regulatory agency that will have jurisdiction over our design solution is the Food and Drug Administration (FDA). The FDA is the agency responsible for the public health of U.S. citizens by regulating and ensuring the safety and efficacy of biomedical/medical devices. Our design solution is an instrument intended to treat the medical condition of NVC by altering the structure of the body and per FDA regulations, is considered a medical device and therefore under their regulation jurisdiction.

8.4 **Product Classification for FDA regulated products**

- ☐ Medical Device Class I
- ☒ Medical Device Class II
- ☐ Medical Device Class III
- ☐ Biologic
- ☐ Drug
- ☐ Combination
- ☐ Not Applicable

8.5 **Regulatory Pathway Description**

Our device combines features of products that have been cleared through the FDA 510(k) pathway, however there is currently no evidence that our device can generate rigid scar tissue for structural support. Additionally, while our device qualifies for a 510(k) approval, testing and performance data must be obtained to demonstrate that it will be as safe and effective, or substantially equivalent, to the previously legally marketed devices. Therefore, the device would require regulatory review to determine its safety and effectiveness through the Premarket Notification 510(k) pathway.

- ☐ Orphan Drug
- ☐ Humanitarian Device
- ☒ 510k
- ☐ IDE and PMA (device)
- ☐ IND and NDA (drug)
- ☐ BLA (biologic)
- ☐ Not Applicable

8.6 **Overview of Research and Development (R&D) Strategy**

Table 11: Proposed Methods of R&D for Device Components

Proposed Procedure/Methods	Reference

Bench	
Needle Testing: Hypodermic needle testing to evaluate sharpness and ease of insertion.	https://www.mecmesin.com/publications/hypodermic-needle-sharpness-testing
PLLA Cytotoxicity: Live/Dead assay to using endothelial cell and culture medium determine if PLLA causes cell death	https://link.springer.com/article/10.1007%2Fs10856-011-4354-z
PLLA Biodegradability: Degradation test in phosphate buffered saline to determine biodegradability under physiologic conditions.	https://www.ncbi.nlm.nih.gov/pmc/articles/PMC5426431/
Mesh Mechanical Testing: Compressive, tensile, and shear testing to determine mechanical properties of mesh and its ability to withstand nasal stresses.	https://journals.physiology.org/doi/full/10.1152/japplphysiol.01049.2005#:~:text=During%20breathing%2C%20a%20complex%20field,at%20the%20air%2Dtissue%20interface.
Animal	
Mesh Sensitization: In vivo rodent assay to assess allergic or sensitizing reactions of the epidermis to prolonged exposure of polypropylene mesh.	https://toxikon.com/testing-service/sensitization/#:~:text=The%20purpose%20of%20sensitization%20tests,reaction%20to%20a%20systemic%20condition%20.
Microneedle Sensitization: In vivo rodent assay to assess allergic or sensitizing reactions of the epidermis and dermis to prolonged exposure of PLLA microneedle and the possibility of chronic toxicity.	https://toxikon.com/testing-service/sensitization/#:~:text=The%20purpose%20of%20sensitization%20tests,reaction%20to%20a%2

	0systemic%20condition%20.
PLLA Biodegradability: Subcutaneous implantation of PLLA implant under rodent dorsal tissue to later be removed and examined for surface degradation using scanning electron microscopy.	https://www.ncbi.nlm.nih.gov/pmc/articles/PMC4352411/
PLLA Biocompatibility: Subcutaneous implantation of PLLA implant under rodent dorsal tissue to later be removed and examined using histologic techniques for signs of host response.	https://www.ncbi.nlm.nih.gov/pmc/articles/PMC5426431/
Tissue Generation: Subcutaneous implantation of PLLA implant under rodent abdominal tissue to later be removed and analyzed for collagen production using immunohistochemistry.	https://www.ncbi.nlm.nih.gov/pmc/articles/PMC2739934/
Human	
Human clinical trials for microneedle effectiveness in collagen production: Controlled clinical study to test the effectiveness of microneedling in stimulating collagen production of the nasal dermis.	https://www.ncbi.nlm.nih.gov/pmc/articles/PMC4976400/
Tests on valve angle for improved airflow: Use of long-range optical coherence tomography to determine nasal valve geometry and quantify improved airway obstruction.	https://www.ncbi.nlm.nih.gov/pmc/articles/PMC5814348/

SECTION 9: ETHICAL CONSIDERATIONS

9.1 Identifying Ethical Considerations

Ethical concerns in this context are largely minimized due to the reduced invasiveness of the implant procedure. Little to no local anesthetics are required for this device to be implanted, dependent upon patient comfort, making this a low risk concern. The use of full body anesthesia for traditional treatments such as functional rhinoplasty can be eliminated through use of this device, allowing this device to serve as a reduction of ethical concerns based on current treatment methods. Further ethical dilemmas that may arise in this context would be religious concerns involving bodily piercings, as the nature of this device does involve performing a body piercing. This is a moderate concern being that it is solely reliant on patient comfort, however this piercing does not approach traditional boundaries set in this context in that the piercing is not visible and acts as a temporary method of support for the main device rather as a statement of fashion.

9.2 Recommended Solution

Risk associated with anesthesia is reduced to a minimum with the recommended implantation procedure, and physicians are recommended to exercise caution when administering local anesthesia for

this procedure (should the patient elect to do so). In regards to religious disapproval, this ethical concern may be further investigated through testing of device stability without the support rod or via alternative methods of attachment, such as a magnetic clip fixture as found on faux piercings, to determine if this may be an alternative option for patients with this concern.

SECTION 10: INTELLECTUAL PROPERTY (IP) AND TECHNOLOGY TRANSFER

10.1 Memorandum of Understanding (MOU) for Confidentiality, Material Transfer, and Intellectual Property

Not applicable to this project.

10.2 Disclosure of IP

Not applicable to this project.

10.3 Title of Invention

Not applicable to this project.

10.4 Contributors

Not applicable to this project.

10.5 Description of IP

The clinical needs we addressed with this device is that it is a minimally invasive nasal dilator that is able to support and permanently correct the collapse of the internal and/or external nasal valve. The main innovation we could potentially patent is the combination of a non-degradable support mesh combined with a lining of biodegradable microdermal needles with a 16 gauge Stainless Steel (316L) support rod that will stabilize and support the device by means of a septum piercing. This would be an acceptable design patent as no one has incorporated a non-degradable mesh with biodegradable PLLA microdermal needles supported by a support rod. This device addresses the needs by not requiring surgery, and providing a permanent solution by promoting scar tissue growth. This differs from other devices due to the combination of our components, the relatively inexpensive procedure, as well as a permanent solution without having the user require or wear the device permanently. Furthermore, the device is placed internally, providing increased comfort and quality of life for the user, unlike many of the current devices. The design patent would include a picture depicting how the mesh lined with microdermal needles would look like.

10.6 Project Funding

Not applicable to this project.

10.7 Student Team Member Contact Information Following Graduation

Not applicable to this project.



SECTION 11: PROJECT ABSTRACT

Title: Absorbable Microneedle Nasal Dilator

Authors: Mariana Cantu, Jazmine Cardenas, Ashley Hicks, Amulya Kadaba Srinivasamurthy, Rachel Rice

Abstract: More than 20 million people in the United States suffer from a form of nasal obstruction, with 30% being a result of nasal valve collapse (NVC). Patients with NVC have limited options available such as corrective surgery or an external nasal dilating device. The problem with corrective surgery, such as functional rhinoplasty, is that surgical, facility, and anesthesia costs sum up to thousands of dollars and result in an unaffordable solution. Those who cannot afford the surgical procedure or opt out of surgery are left with the alternative of nasal dilators, which can often be uncomfortable to wear and externally visible. There is a current need for a minimally invasive, discrete, and affordable solution that will provide structural support to the nasal valve and eliminate airflow obstruction. The Absorbable Microneedle Nasal Dilator is a device that provides the needed solution while improving the integrity of the structure. The innovation of the device is its ability to stimulate collagen production to generate rigid tissue that will permanently provide support to the collapse nasal valve through the use of microneedles. In addition, the microneedles will be made of a biodegradable polymer that will optimize permanent results and allow the rest of the device to be removed. This will allow patients a more affordable, minimally invasive, and permanent alternative to traditional treatments for NVC.

BIOMEDICAL ENGINEERING
TEXAS A&M UNIVERSITY

SECTION 12: REFERENCES

[1] Clark, D. W., Del Signore, A. G., Raithatha, R., & Senior, B. A. (2018). Nasal Airway Obstruction: Prevalence and Anatomic Contributors. Ear, Nose & Throat Journal, 97(6), 173–176. https://doi.org/10.1177/014556131809700615

[2] "Nasal Valve Collapse: Symptoms, Surgery, and Recovery," *Healthline*, Feb. 01, 2018. Available at: https://www.healthline.com/health/nasal-valve-collapse#types

[3] Nigro, C. E. N., Nigro, J. F. de A., Mion, O. & Mello, J. F. Nasal Valve: anatomy and physiology. Brazilian Journal of Otorhinolaryngology (2015). Available at: https://www.sciencedirect.com/science/article/pii/S1808869415307953. (Accessed: 26th April 2021)

[4] M. B. Bloching. GMS current topics in otorhinolaryngology, head and neck surgery 2007 Vol. 6

[5] Nasal valve collapse. Raleigh Capitol Sinus and Allergy Center Available at: http://www.raleighsinuscenter.com/conditions-treated/nasal-valve-collapse#:~:text=Nasal%20valve%20collapse,-This%20is%20a&text=It%20occurs%20when%20cartilage%20in,4%20patients%20with%20nasal%20obstruction. (Accessed: 26th April 2021)

[6] Nasal Valve Collapse St. Louis, MO: Nasal Valve Collapse Treatment. St. Louis Sinus Center (2020). Available at: https://www.stlsinuscenter.com/nasal-valve-collapse/#:~:text=The%20nasal%20valve%20collapse%20can,further%20narrowing%20and%20difficulty%20breathing. (Accessed: 26th April 2021)

[7] Hayes, K. Consider Nasal Valve Collapse If You Are Congested After Nose Trauma. Verywell Health (2020). Available at: https://www.verywellhealth.com/nasal-valve-collapse-1191944. (Accessed: 26th April 2021)

[8] Young, B. Nasal Valve Collapse. Healthline (2018). Available at: https://www.healthline.com/health/nasal-valve-collapse. (Accessed: 26th April 2021)

[9] Shavers, B. How to Treat Your Nasal Valve Collapse? OKOA (2019). Available at: https://www.okoa.org/articles/how-to-treat-your-nasal-valve-collapse#:~:text=The%20most%20common%20causes%20for,complications%20after%20a%20nose%20surgery. (Accessed: 26th April 2021)

[10] Entellus Medical, Inc. Multi-Center Market Research Confirms Nasal Valve Collapse as a Contributor for Most Nasal Obstruction Sufferers. GlobeNewswire News Room (2018). Available at: https://www.globenewswire.com/news-release/2018/06/28/1531382/0/en/Multi-Center-Market-Research-Confirms-Nasal-Valve-Collapse-as-a-Contributor-for-Most-Nasal-Obstruction-Sufferers.html. (Accessed: 26th April 2021)

[11] Sinus Surgery Costs Explained. Dr Garrett Bennett - NY Sinus & Rhinoplasty Surgeon Available at: https://www.nycfacemd.com/sinus-surgery-costs-explained/. (Accessed: 26th April 2021)

[12] Rhinoplasty Market Size & Share, Trends Report, 2021-2028 Available at: https://www.grandviewresearch.com/industry-analysis/rhinoplasty-market#:~:text=The%20global%20rhinoplasty%20market%20size%20was%20estimated%20at%20USD%206.2,USD%204.7%20billion%20in%202021.&text=The%20global%20rhinoplasty%20market%20is,USD%207.3%20billion%20by%202028. (Accessed: 26th April 2021)

[13] Functional Rhinoplasty - Nose Job Procedure: Washington D.C. Dr. Reilly (2021). Available at: https://reillyfps.com/services/medical-functional-rhinoplasty/#:~:text=Functional%20Rhinoplasty%20is%20surgery%20that,effects%20on%20your%20overall%20health.&text=Functional%20rhinoplasty%20surgery%20involves%20surgical%20incisions%20in%20the%20nose%20and%20nostril%20area. (Accessed: 27th April 2021)

[14] LATERA® absorbable nasal implant. Stryker Available at: https://ent.stryker.com/medical-devices/nasal-implant/latera. (Accessed: 27th April 2021)

[15] コーリー シー. ムーア, "Nasal dilator," Japan Patent JP2010509949A, Apr. 2, 2010

[16] G. Chen, K. Hristov, J. Guo, JJ. Zhou, J. Matrunich, "Bioabsorbable multilayer nasal valve spreader graft," United States Patent US10149753B2, Dec. 11, 2018

[17] P. Stolovitzky, B. Senior, R. A. Ow, N. Mehendale, N. Bikhazi, and D. M. Sidle, “Assessment of bioabsorbable implant treatment for nasal valve collapse compared to a sham group: a randomized control trial,” *Wiley Online Library*, 21-Jun-2019. [Online]. Available: https://onlinelibrary.wiley.com/doi/full/10.1002/alr.22362. [Accessed: 28-Apr-2021].

[18] Corrado, A. Rhinoplasty Cost . Facial Plastic Surgeon Philadelphia | Dr. Anthony Corrado Available at: https://www.dranthonycorrado.com/blog/rhinoplasty-cost/. (Accessed: 27th April 2021)

[19] Rhinoplasty NYC: What's The Cost? Cohen Winters Plastic Surgery (2018). Available at: https://cohenwintersplasticsurgery.com/rhinoplasty-nyc-cost/. (Accessed: 27th April 2021)

[20] White, J. The Average Cost of a Rhinoplasty. Aesthetic Reconstructive Center Available at: https://www.arcplasticsurgeons.com/blog/the-average-cost-of-a-rhinoplasty/. (Accessed: 27th April 2021)

[21] Winters. Rhinoplasty Recovery Time: How Much Do I Need? Cohen Winters Plastic Surgery (2018). Available at: https://cohenwintersplasticsurgery.com/rhinoplasty-recovery-time/#:~:text=Week%201%3A%20Your%20surgeon%20will,no%20excess%20bleeding%20or%20swelling. (Accessed: 27th April 2021)



[22] Justice, M. & Alec. How Much Does The Average American Make? CleverLeverage.com (2018). Available at: https://cleverleverage.com/average-american-income/. (Accessed: 27th April 2021)