VEL TECH HIGH TECH

Dr. RANGARAJAN Dr. SAKUNTHALA ENGINEERING COLLEGE

An Autonomous Institution

Approved by AICTE-New Delhi, Affiliated to Anna University, Chennai

Accredited by NBA, New Delhi & Accredited by NAAC with "A" Grade & CGPA of 3.27

21ME16T

ENGINEERING GRAPHICS

COURSE MATERIALS

SEMESTER-1

R2021

UNIT IV PROJECTION OF SECTIONED SOLIDS AND DEVELOPMENT OF SURFACES

PROJECTION OF SECTIONED SOLIDS

1. A cube of side 25 mm rests on the HP on one of its faces with a vertical face inclined at 35° to the VP. A plane perpendicular to the HP and inclined at 50° to the VP cuts the cube, 3 mm away from the axis. Draw the top view and the sectional front view. Also draw the true shape of the section.
2. A cube of side 30 mm rests on the HP on its end with the vertical faces equally inclined to the VP. It is cut by a plane perpendicular to the VP and inclined at 30°to the HP meeting the axis at 25 mm above the base. Draw the front view, sectional top view and the true shape of the section.

3. A cube of side 40 mm is placed and cut by a plane in such a way that the true shape of the section is a regular hexagon. Draw the front and top views of the cube and determine the inclination of the plane with the HP.

4. A hexagonal prism of base side 20 mm and height 40 mm rests on the HP on one of its ends with two rectangular faces parallel to the VP. IT is cut by a plane perpendicular to the HP and inclined at 60° to the VP at a distance of 5 mm from the axis. Draw the top view, sectional front view and an auxiliary front view on the AVP parallel to the cutting plane.

5. A hexagonal pyramid of base side 20 mm and altitude 50 mm rests on its base on the HP with two edges of the base perpendicular to the VP. A cutting plane parallel to the HP cuts the pyramid at a height of 20 mm above the base. Draw the front view and the sectional top view.

6. A pentagonal pyramid of base side 20 mm and altitude 55 mm rests on its base on the HP with one of the base edges perpendicular to the VP. It is cut by a plane inclined at 50° to the base and perpendicular to the VP. The cutting plane meets the axis at 15 mm above the base. Draw the front view, sectional top view and the true shape of the section.

7. A hexagonal pyramid of base side 25 mm and axis 55 mm rests on its base on the HP with two base edges perpendicular to the VP. It is cut by a plane perpendicular to the VP and inclined at 30° to the HP meeting the axis at 20 mm from the vertex. Draw the front view, sectional top view and the true shape of the section.

8. A hexagonal pyramid of base side 20 mm and axis 55 mm rests on the HP on its base with two edged parallel to the VP. It is cut by a vertical plane inclined at 30° to the VP and cutting the

pyramid at 5 mm from the top view of the axis. Draw the top view, sectional front view and an auxiliary front view on an AVP parallel to the cutting plane.

9. A pentagonal pyramid of base side 40 mm and altitude 80 mm rests on the HP on its base with an edge of the base parallel to the VP. It is cut by a vertical plane inclined at 45° to the VP at a distance 10 mm from the axis. Draw the top view, sectional front view and the true shape of the section.

10. A square pyramid of base side 40 mm and axis 65 mm rests on its base on HP. A cutting plane inclined to HP and perpendicular to VP cuts the pyramid in such a way that the true shape of the section is a trapezium of parallel sides measuring 30 mm and 20 mm. Draw its sectional top view and the true shape of the section. Also find the inclination of the cutting plane to the HP.

11. A solid is half pyramidal and half conical. The pyramidal portion has a base of three sides of size 20 mm each. The axis length is 50 mm. The solid rests on the HP on its base with a side of the pyramidal base perpendicular to the VP. It is cut by a plane perpendicular to the VP and inclined at 45° to the HP. The plane cuts the axis at 22 mm above base. Draw the front view, sectional top view and true shape of the section.

12. A cylinder of diameter 40 mm and height 50 mm rests on its base on the HP. It is cut by a plane perpendicular to the VP and inclined at 50° to the HP. The cutting plane meets the axis at a distance of 15 mm from the top. Draw the front view, sectional top view and the true shape of the section.

13. A right circular cone of base diameter 50 mm and axis length 60 mm rests on its base on the HP. It is cut by a plane perpendicular to the HP and inclined at 60° to the VP. The shortest distance between the cutting plane and the top view of the axis is 8 mm. Draw the top view, sectional front view and the true shape of the section.

14. A cone of base diameter 40 mm and height 50 mm rests on its base on the HP. It is cut by a plane perpendicular to the VP and inclined at 40° to the HP. The cutting plane meets the axis at 20 mm from the vertex. Draw the sectional top view and the true shape of the section. Use generator method.

15. A cone of base diameter 40 mm and altitude 50 mm rests on its base on the HP. It is cut by a plane perpendicular to the VP and inclined at 60° to the HP. The cutting plane meets the axis at 27 mm from the vertex. Draw the sectional top view and the true shape of the section.

16. A cone of base diameter 40 mm and altitude 50 mm rests on its base on the HP. It is cut by a section plane perpendicular to the VP and inclined at 80° to the HP, passing through the apex. Draw the sectional top view and the true shape of the section.

PROJECTION OF DEVELOPMENT OF SURFACES

17. A hexagonal prism of base side 20 mm and height 45 mm is resting on one of its ends on the HP with two of its lateral faces parallel to the VP. It is cut by a plane perpendicular to the VP and inclined at 30° to the HP. The plane meets the axis at a distance of 20 mm above the base. Draw the development of the lateral surfaces of the lower portion of the prism.

18. A pentagonal prism of base side 25 mm and height 60 mm stands on one of its ends on the HP with a rectangular face parallel to the VP. A hole of diameter 30 mm is drilled centrally through the prism in such a way that the axis of the bisects the axis of the prism at right angles. The axis of the hole is perpendicular to the VP. Draw the development of the lateral surfaces of the prism.

19. A cylinder of diameter 40 mm and height 50 mm is resting vertically on one of its ends on the HP. It is cut by a plane perpendicular to the VP and inclined at 30° to the HP. The plane meets the axis at a point 30 mm from the base. Draw the development of the lateral surface of the lower portion of the truncated cylinder.

20. Draw the development of the lateral surface of the right portion of the cylinder of diameter 50 mm and height 65 mm by a plane perpendicular to the VP and inclined at 60° to the base and passing through the axis at a height of 40 mm above base.

21. A circular hole of diameter 30 mm is drilled through a vertical cylinder of diameter 50 mm and height 65 mm. The axis of the hole is perpendicular to the VP and meets the axis of the cylinder at right angles at a height of 30 mm above the base. Draw the development of the lateral surface of the cylinder.

22. A hexagonal pyramid of base of side 25 mm and altitude 50 mm is resting vertically on its base on the ground with two of the sides of the base perpendicular to the VP. It is cut by a plane perpendicular to the VP and inclined at 40° to the HP. The plane bisects the axis of the pyramid. Draw the development of the lateral surfaces of the pyramid.

23. A square pyramid of base side 25 mm and altitude 50 mm rests on its base on the HP with two sides of the base parallel to the VP. It is cut by a plane bisecting the axis. The cutting plane is perpendicular to the VP and inclined at 30° to the base. Draw the development of the lateral surfaces of the lower part of the cut pyramid.

24. A square pyramid of base side 35 mm and axis 60 mm rests on its base on the ground with one of the sides of the base inclined at 30° to the VP. A string is wound round the surfaces of the pyramid starting from left extreme point on the base and ending at the same point. Find the shortest length of the string required. Also trace the path of the string in front and top views.

25. A right circular cone of base diameter 60 mm and height 70 mm is resting on its base on the ground. It is cut by a plane perpendicular to the VP and inclined at 30° to the HP. The cutting plane bisects the axis of the cone. Draw the development of the lateral surface of the truncated cone.

26. A cone of base diameter 60 mm and altitude 70 mm rests on its base on the HP. It is cut by a plane perpendicular to both the HP and the VP and passing through the cone 10 mm to the left of the axis of the cone. Draw the development of the lateral surface of the right portion of the cut cone.

27. A cone of base diameter 60 mm and height 70 mm rests vertically on its base on the ground. A string is wound round the curved surface of the cone starting from left extreme point on the base and ending at the same point. Find the shortest length of the string required. Also, trace the path of the string in the front and the top views.

28. A hexagonal prism of base edge 25 mm and height 60 mm rests on one of its ends on the HP with a vertical face parallel to the VP. A horizontal hole of diameter 36 mm is drilled centrally right through the prism with its axis perpendicular to the VP. Draw the development of the lateral surfaces of the prism with the table.

29. A hexagonal pyramid of base side 20 mm and altitude 55 mm resting on its base on the HP with a base edge parallel to the VP. A circular hole of diameter 20 mm is drilled right through the pyramid with the axis of the hole perpendicular to the VP and meeting the axis of the pyramid at 20 mm above the base. Draw the development of the pyramid with the hole.

30. A pentagonal pyramid of base side 20 mm and axis length 50 mm rests on its base on the HP with a base edge parallel to the VP and further away from the VP. A square slot of diagonal 16 mm is drilled right through the pyramid such that one diagonal coincides with the axis of the pyramid. The center of the slot lies on the axis of the pyramid 20 mm above the base of the pyramid. Draw the development of the lateral surfaces of the pyramid with the cut-out when the axis of the slot is perpendicular to VP.

UNIT IV SECTION OF SOLIDS AND DEVELOPMENT OF SURFACES

1. A cube of side 25 mm rests on the HP on one of its faces with a vertical face inclined at 35° to the VP. A plane perpendicular to the HP and inclined at 50° to the VP cuts the cube, 3 mm away from the axis. Draw the top view and the sectional front view. Also draw the true shape of the section.

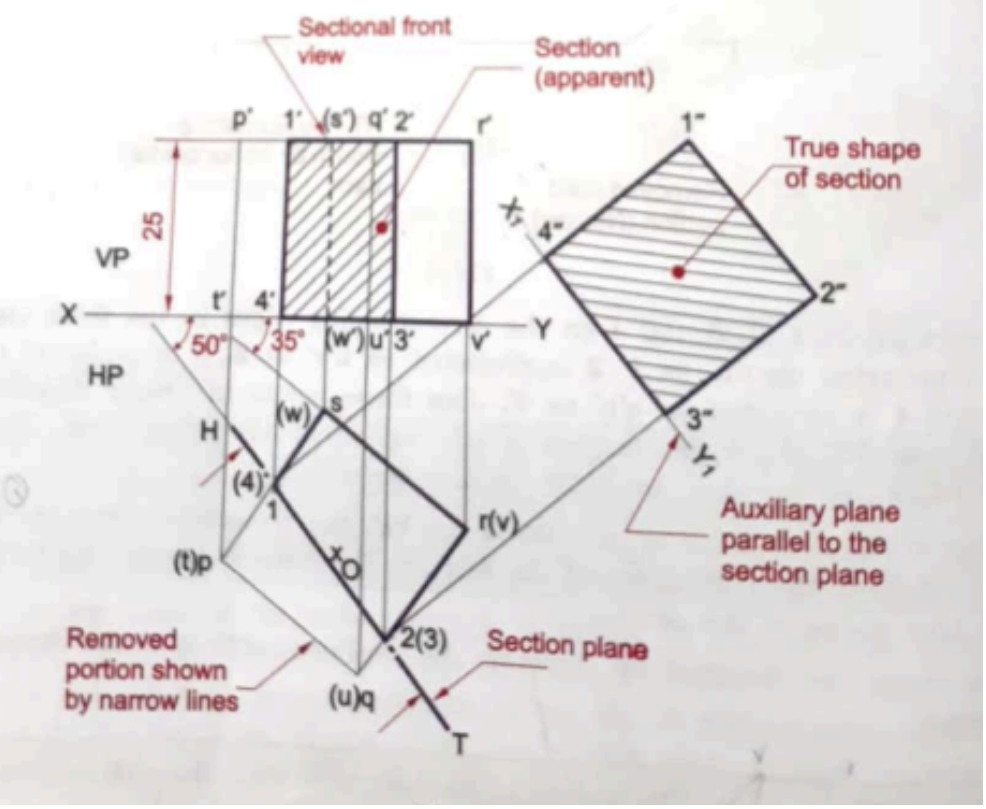

2. A cube of side 30 mm rests on the HP on its end with the vertical faces equally inclined to the VP. It is cut by a plane perpendicular to the VP and inclined at 30°to the HP meeting the axis at 25 mm above the base. Draw the front view, sectional top view and the true shape of the section.

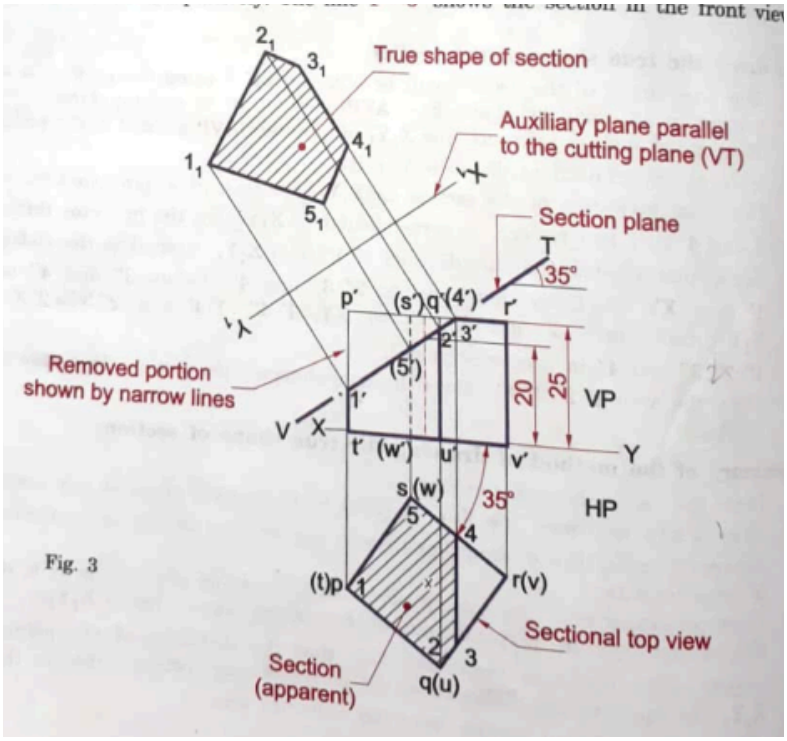

Fig. 3

3. A cube of side 40 mm is placed and cut by a plane in such a way that the true shape of the section is a regular hexagon. Draw the front and top views of the cube and determine the inclination of the plane with the HP.

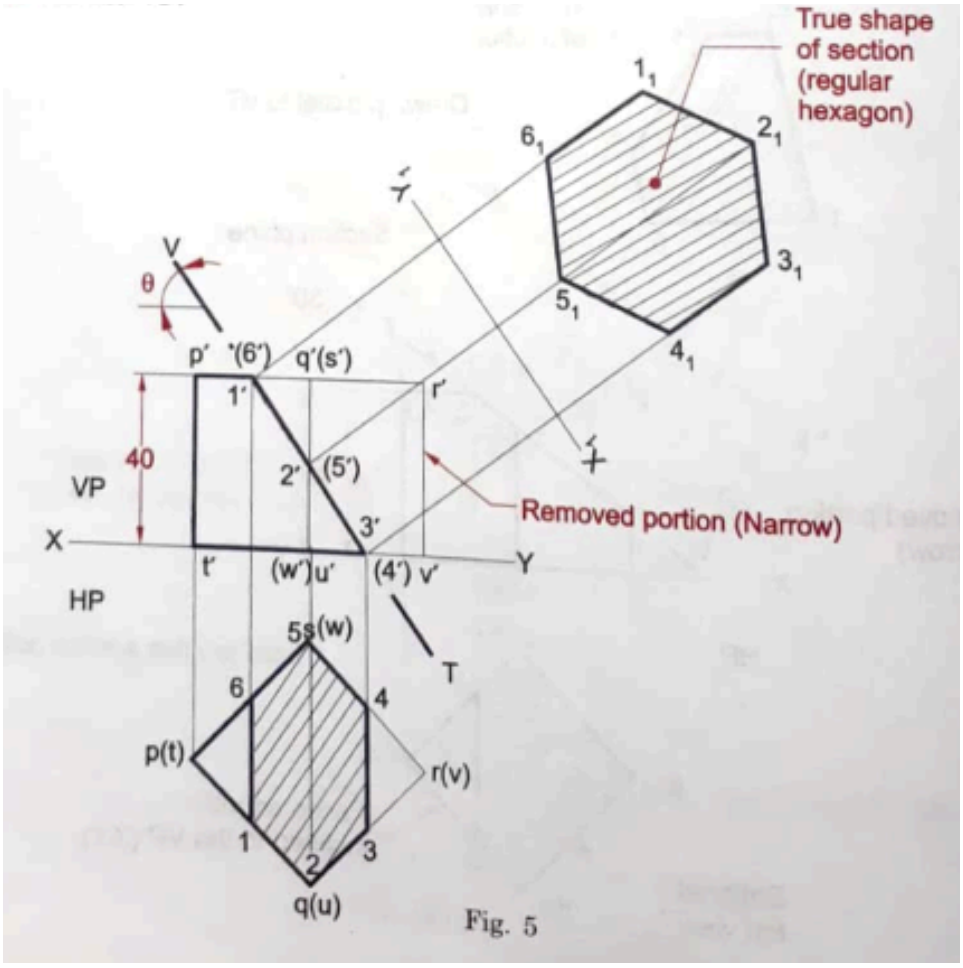

Fig. 5

4. A hexagonal prism of base side 20 mm and height 40 mm rests on the HP on one of its ends with two rectangular faces parallel to the VP. IT is cut by a plane perpendicular to the HP and inclined at 60° to the VP at a distance of 5 mm from the axis. Draw the top view, sectional front view and an auxiliary front view on the AVP parallel to the cutting plane.

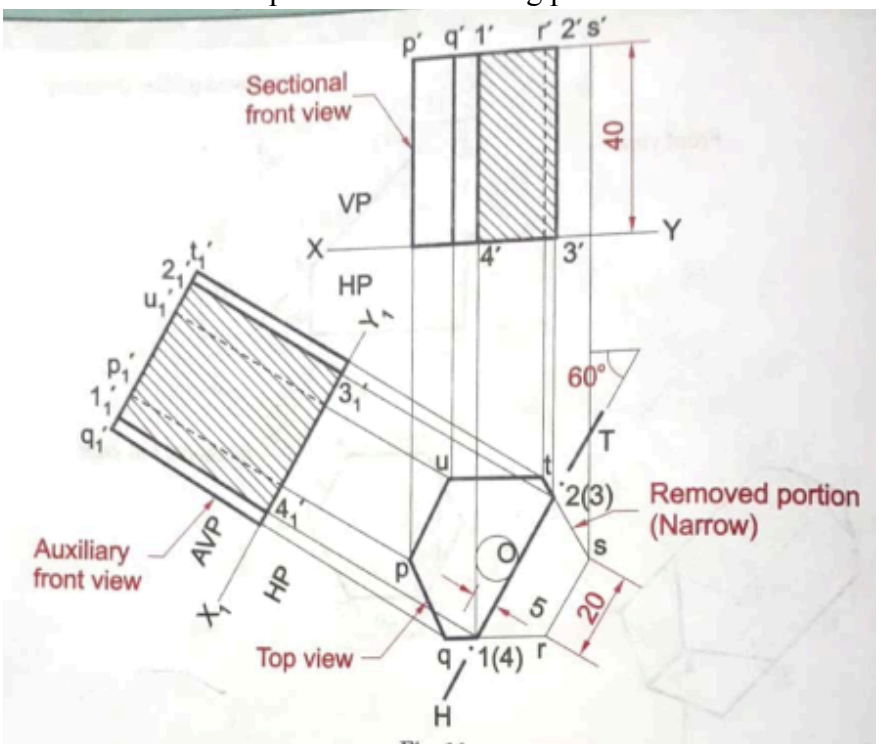

5. A hexagonal pyramid of base side 20 mm and altitude 50 mm rests on its base on the HP with two edges of the base perpendicular to the VP. A cutting plane parallel to the HP cuts the pyramid at a height of 20 mm above the base. Draw the front view and the sectional top view.

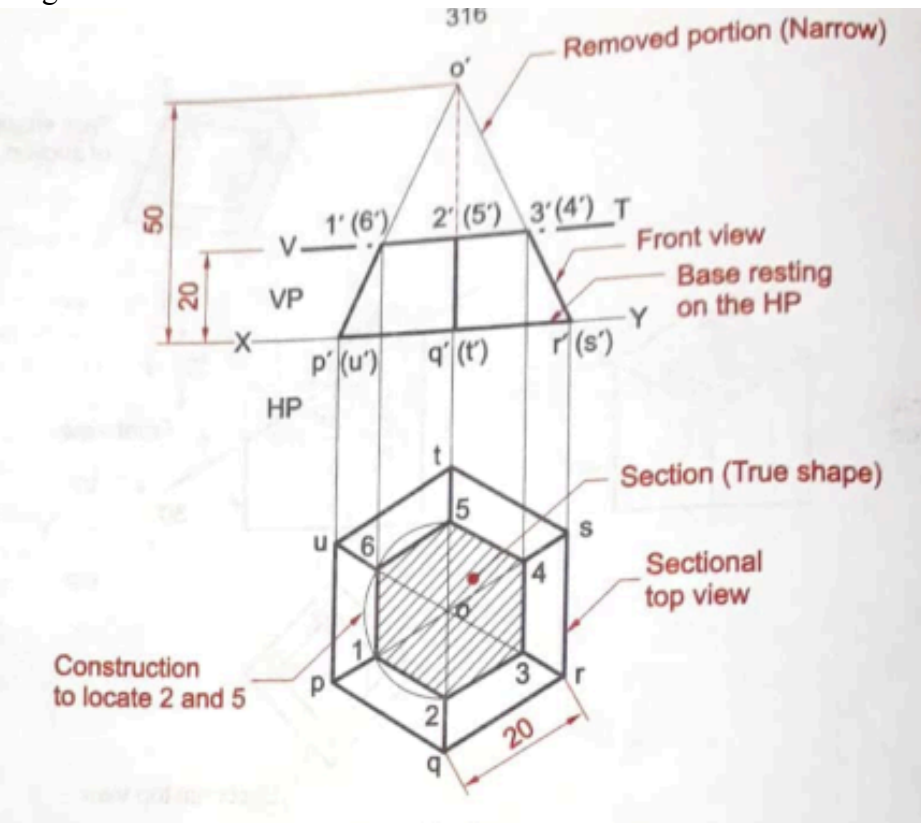

6. A pentagonal pyramid of base side 20 mm and altitude 55 mm rests on its base on the HP with one of the base edges perpendicular to the VP. It is cut by a plane inclined at 50° to the base and perpendicular to the VP. The cutting plane meets the axis at 15 mm above the base. Draw the front view, sectional top view and the true shape of the section.

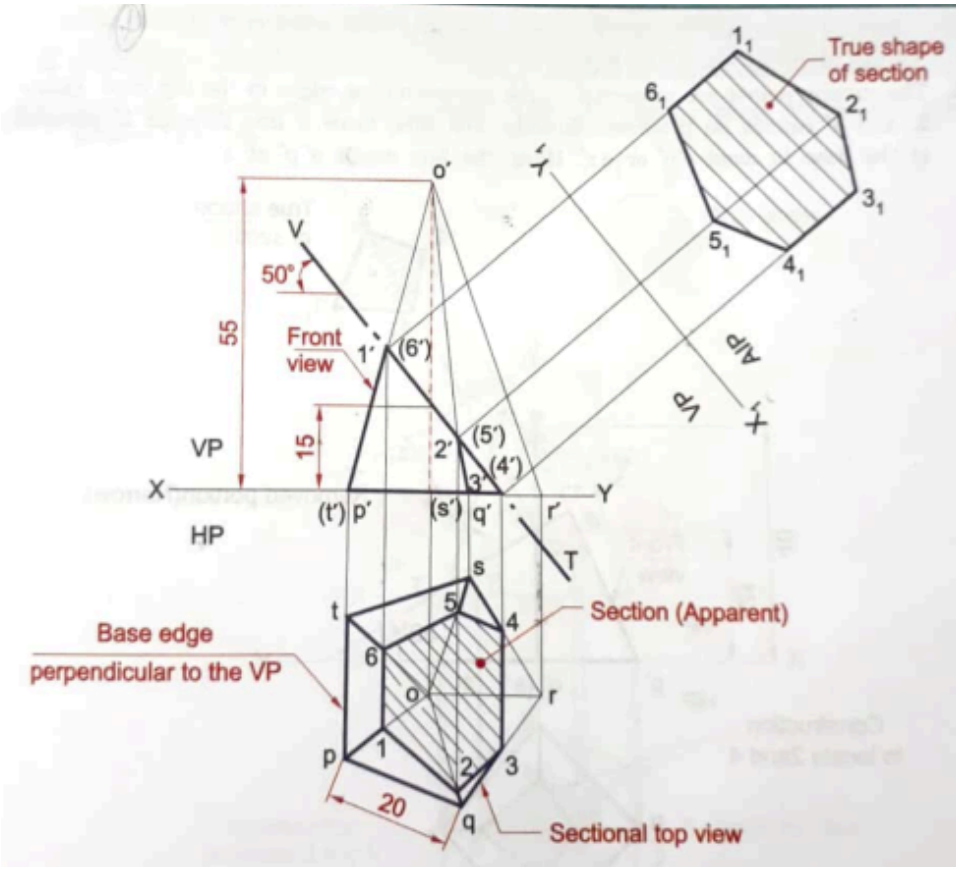

7. A hexagonal pyramid of base side 25 mm and axis 55 mm rests on its base on the HP with two base edges perpendicular to the VP. It is cut by a plane perpendicular to the VP and inclined at 30° to the HP meeting the axis at 20 mm from the vertex. Draw the front view, sectional top view and the true shape of the section.

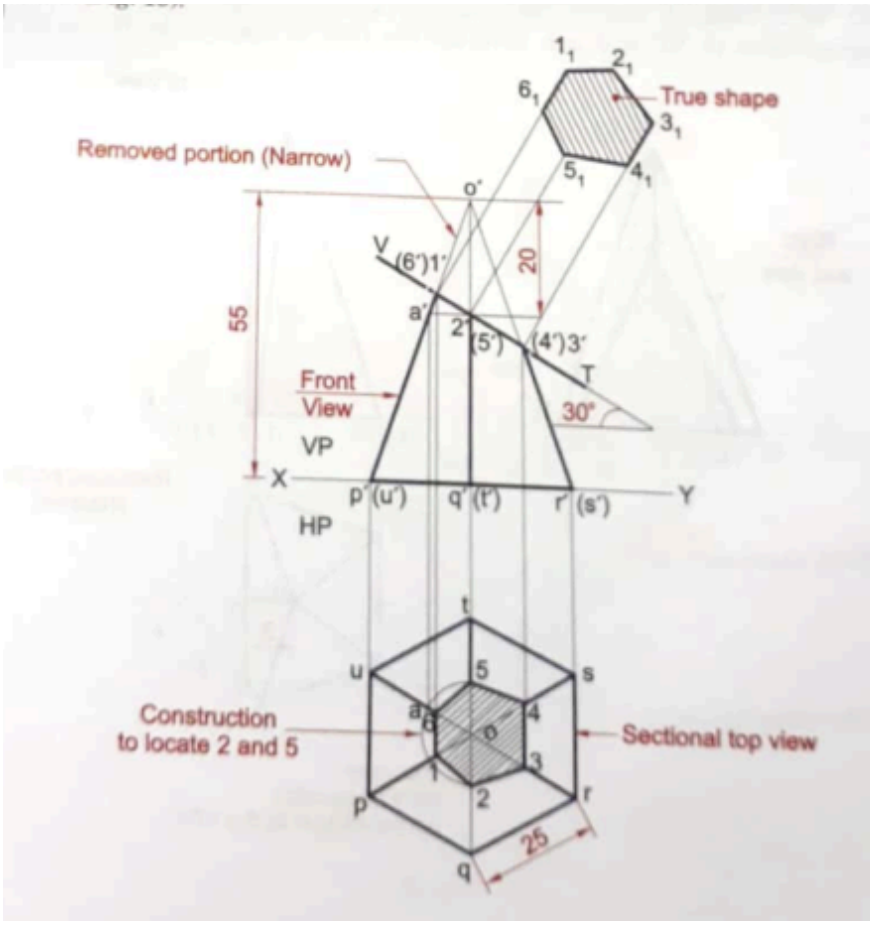

8. A hexagonal pyramid of base side 20 mm and axis 55 mm rests on the HP on its base with two edged parallel to the VP. It is cut by a vertical plane inclined at 30° to the VP and cutting the pyramid at 5 mm from the top view of the axis. Draw the top view, sectional front view and an auxiliary front view on an AVP parallel to the cutting plane.

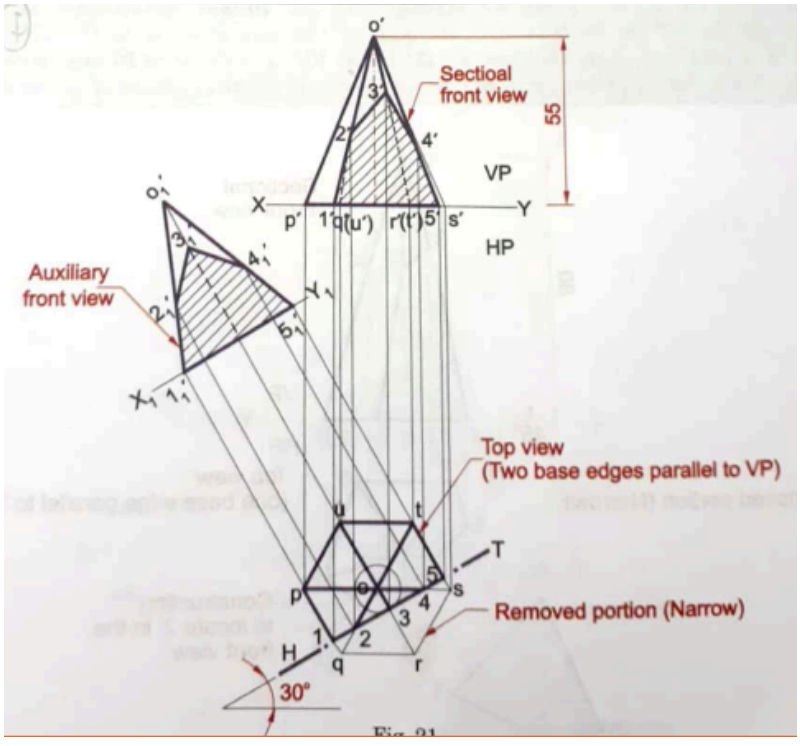

9. A pentagonal pyramid of base side 40 mm and altitude 80 mm rests on the HP on its base with an edge of the base parallel to the VP. It is cut by a vertical plane inclined at 45° to the VP at a distance 10 mm from the axis. Draw the top view, sectional front view and the true shape of the section.

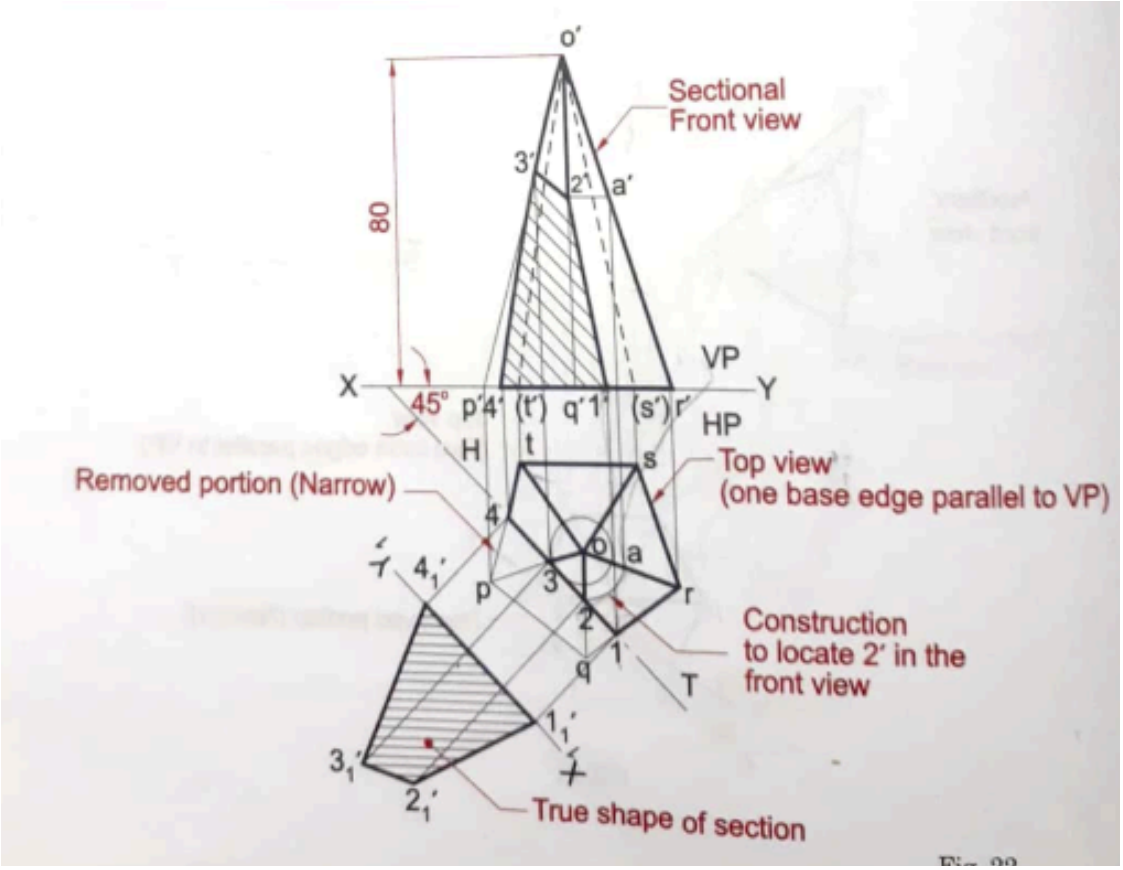

10. A square pyramid of base side 40 mm and axis 65 mm rests on its base on HP. A cutting plane inclined to HP and perpendicular to VP cuts the pyramid in such a way that the true shape of the section is a trapezium of parallel sides measuring 30 mm and 20 mm. Draw its sectional top view and the true shape of the section. Also find the inclination of the cutting plane to the HP.

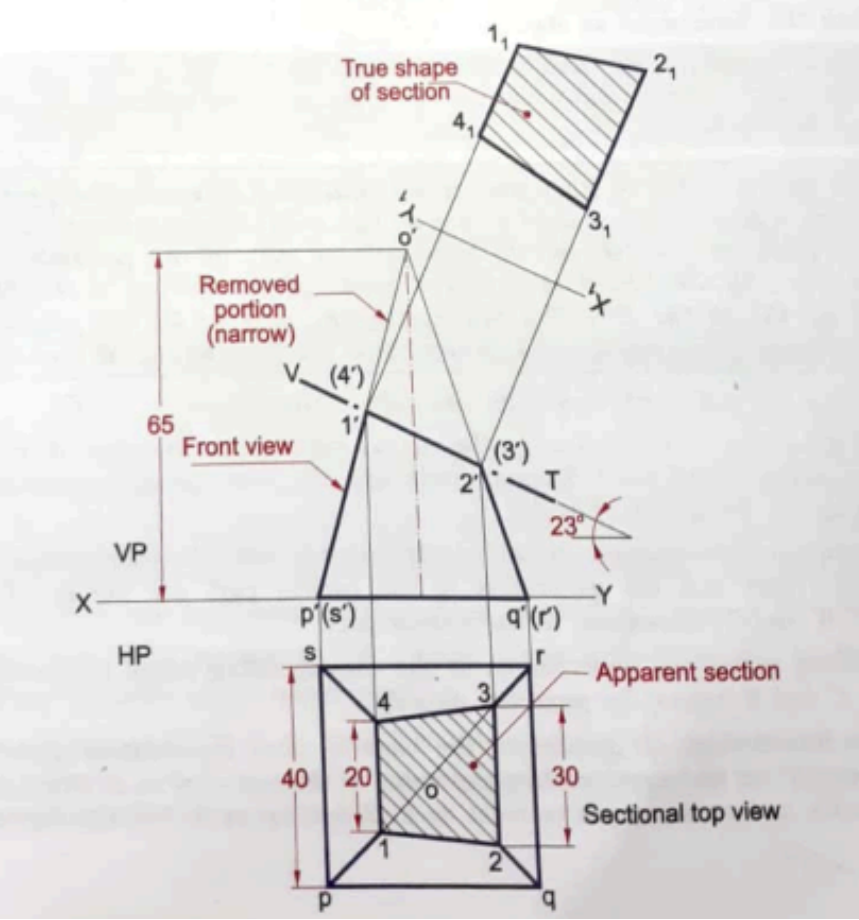

11. A solid is half pyramidal and half conical. The pyramidal portion has a base of three sides of size 20 mm each. The axis length is 50 mm. The solid rests on the HP on its base with a side of the pyramidal base perpendicular to the VP. It is cut by a plane perpendicular to the VP and inclined at 45° to the HP. The plane cuts the axis at 22 mm above base. Draw
the front view, sectional top view and true shape of the section.

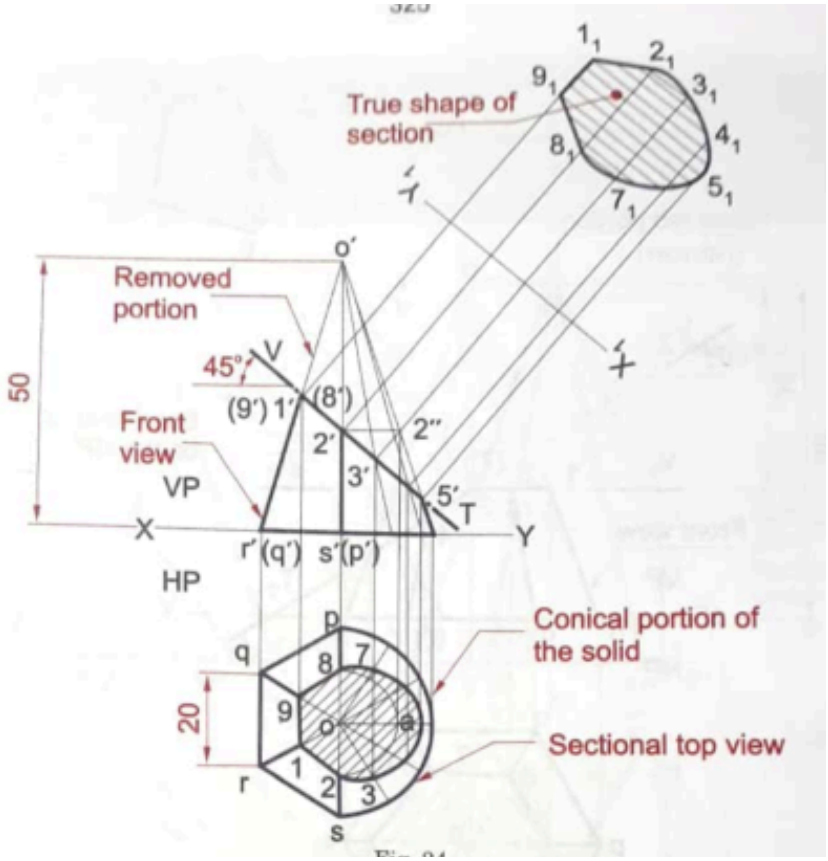

11. A cylinder of diameter 40 mm and height 50 mm rests on its base on the HP. It is cut by a plane perpendicular to the VP and inclined at 50° to the HP. The cutting plane meets the axis at a distance of 15 mm from the top. Draw the front view, sectional top view and the true shape of the section.

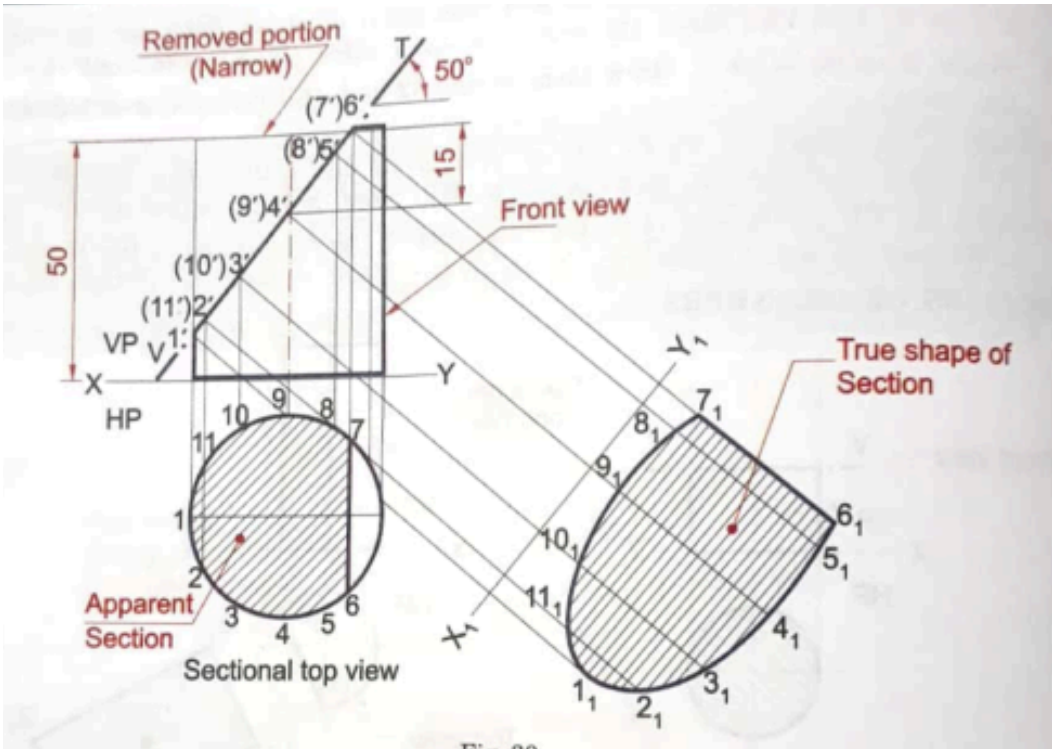

12. A right circular cone of base diameter 50 mm and axis length 60 mm rests on its base on the HP. It is cut by a plane perpendicular to the HP and inclined at 60° to the VP. The shortest distance between the cutting plane and the top view of the axis is 8 mm. Draw the top view, sectional front view and the true shape of the section.

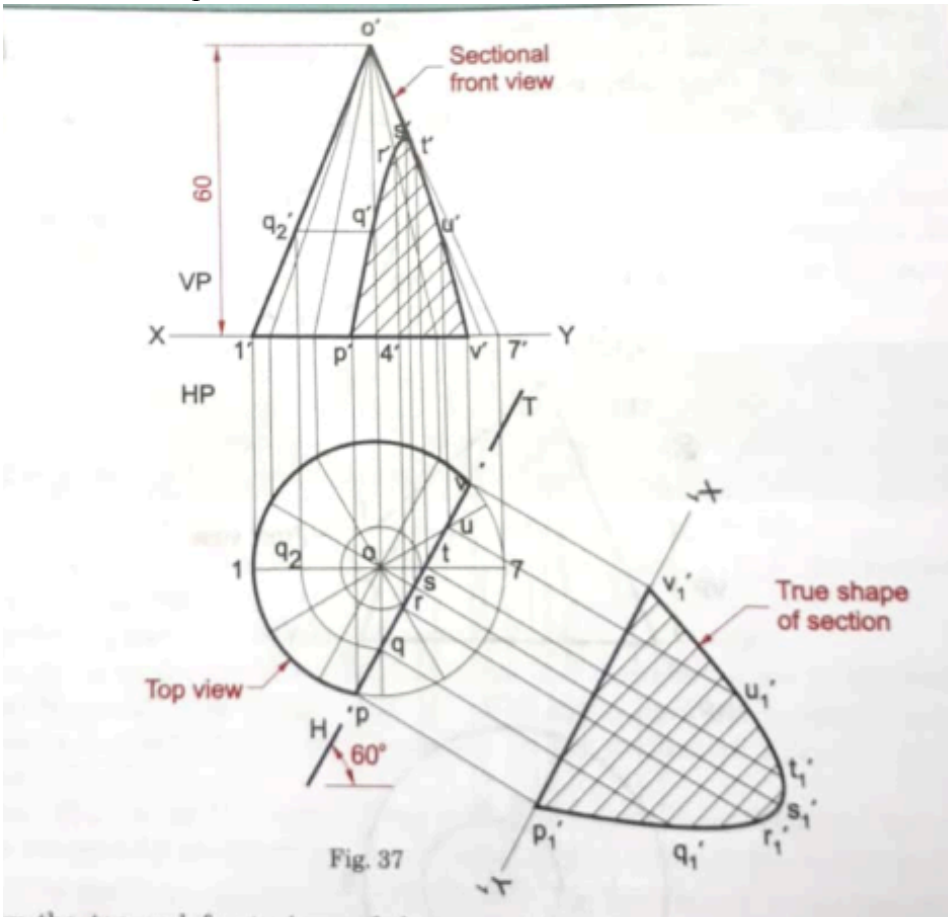

13. A cone of base diameter 40 mm and height 50 mm rests on its base on the HP. It is cut by a plane perpendicular to the VP and inclined at 40° to the HP. The cutting plane meets the axis at 20 mm from the vertex. Draw the sectional top view and the true shape of the section. Use generator method.

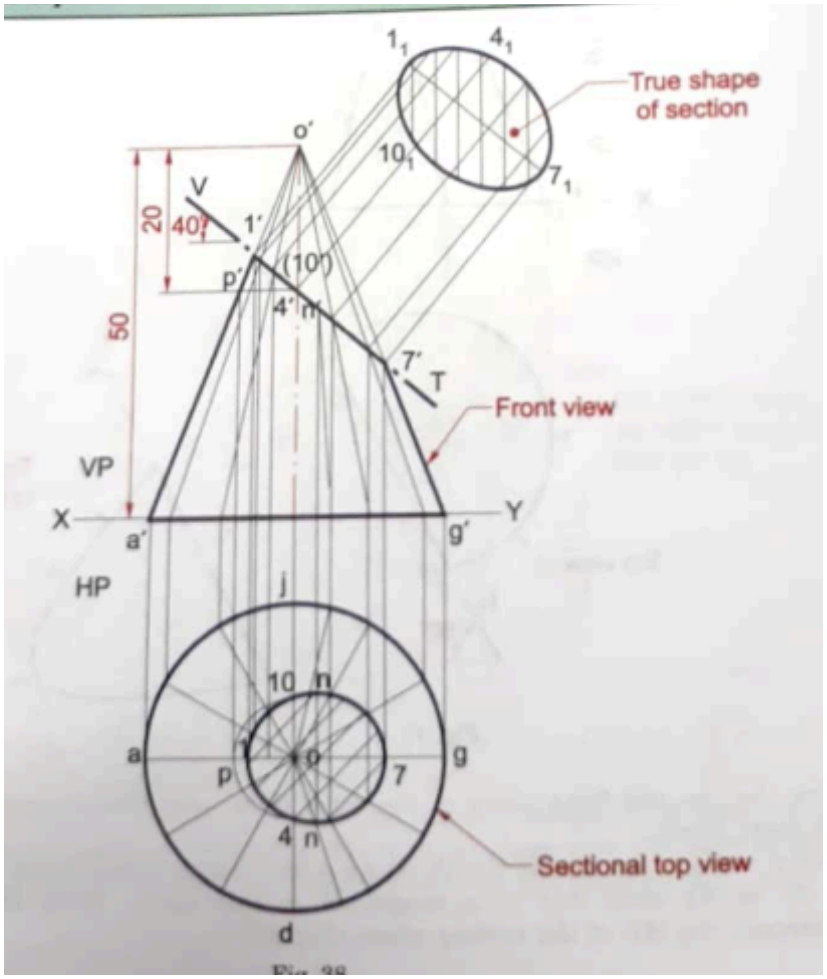

14. A cone of base diameter 40 mm and altitude 50 mm rests on its base on the HP. It is cut by a plane perpendicular to the VP and inclined at 60° to the HP. The cutting plane meets the axis at 27 mm from the vertex. Draw the sectional top view and the true shape of the section.

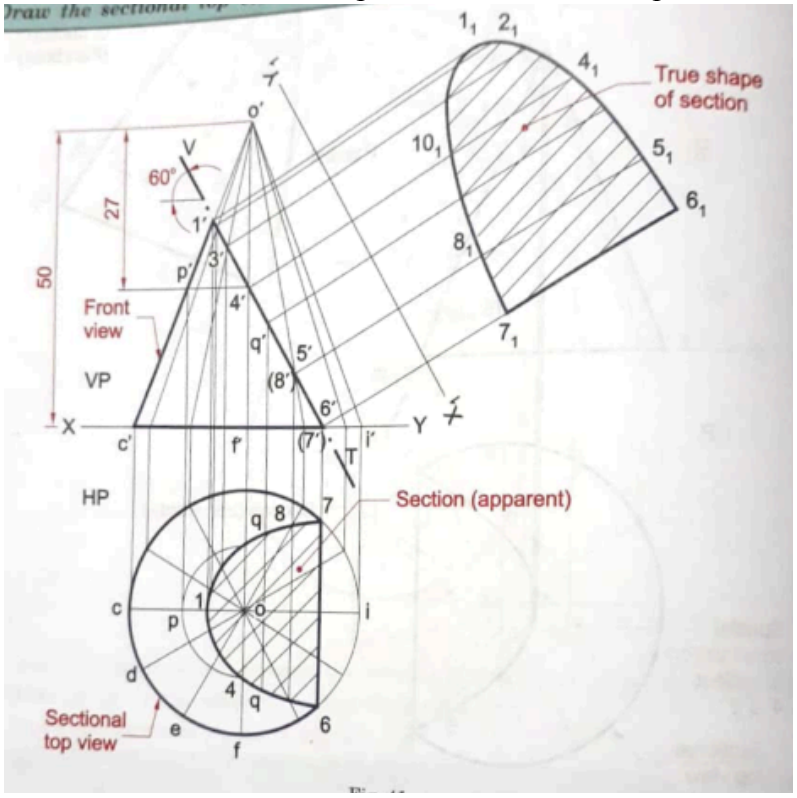

15. A cone of base diameter 40 mm and altitude 50 mm rests on its base on the HP. It is cut by a section plane perpendicular to the VP and inclined at 80° to the HP, passing through the apex. Draw the sectional top view and the true shape of the section.

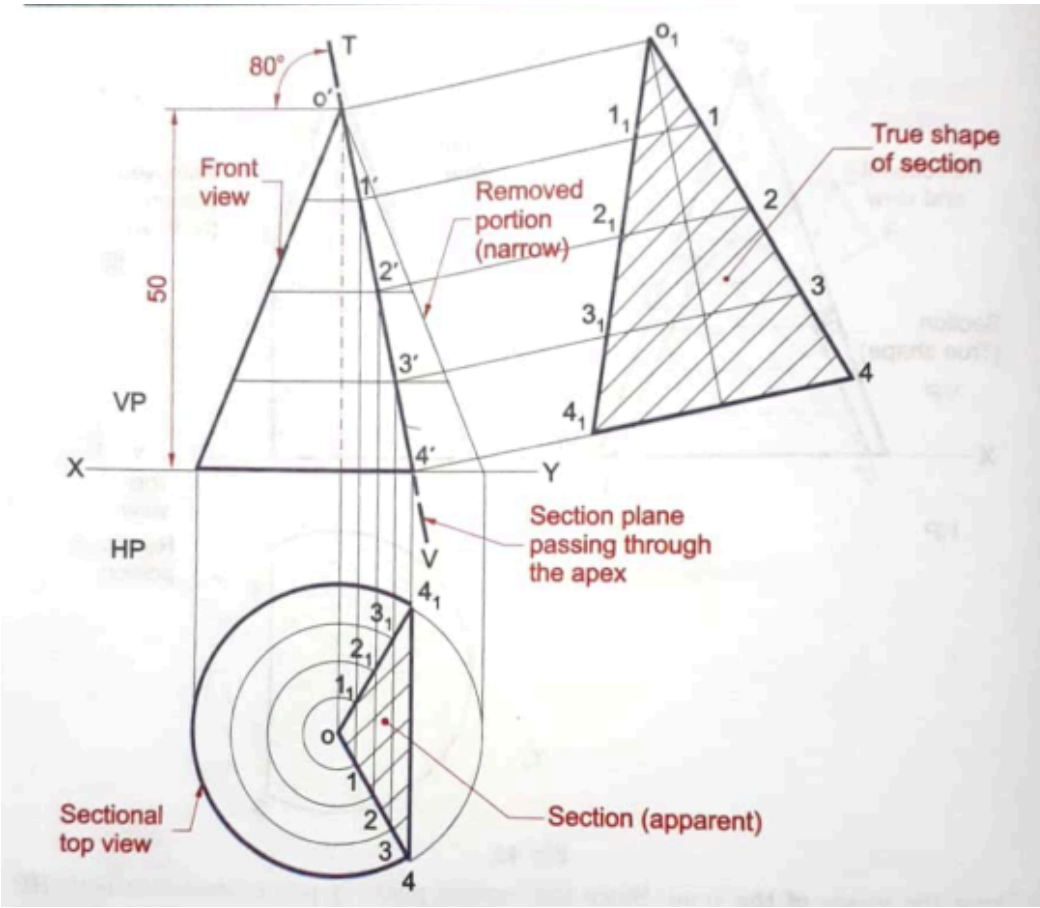

PROJECTION OF DEVELOPMENT OF SURFACES

17. A hexagonal prism of base side 20 mm and height 45 mm is resting on one of its ends on the HP with two of its lateral faces parallel to the VP. It is cut by a plane perpendicular to the VP and inclined at 30° to the HP. The plane meets the axis at a distance of 20 mm above the base. Draw the development of the lateral surfaces of the lower portion of the prism.

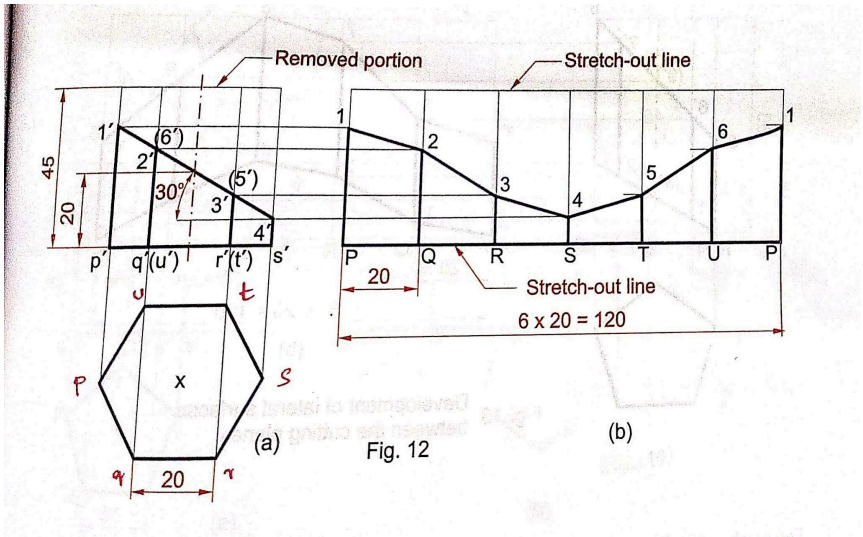

Fig. 12

18. A pentagonal prism of base side 25 mm and height 60 mm stands on one of its ends on the HP with a rectangular face parallel to the VP. A hole of diameter 30 mm is drilled centrally through the prism in such a way that the axis of the bisects the axis of the prism at right angles. The axis of the hole is perpendicular to the VP. Draw the development of the lateral surfaces of the prism.

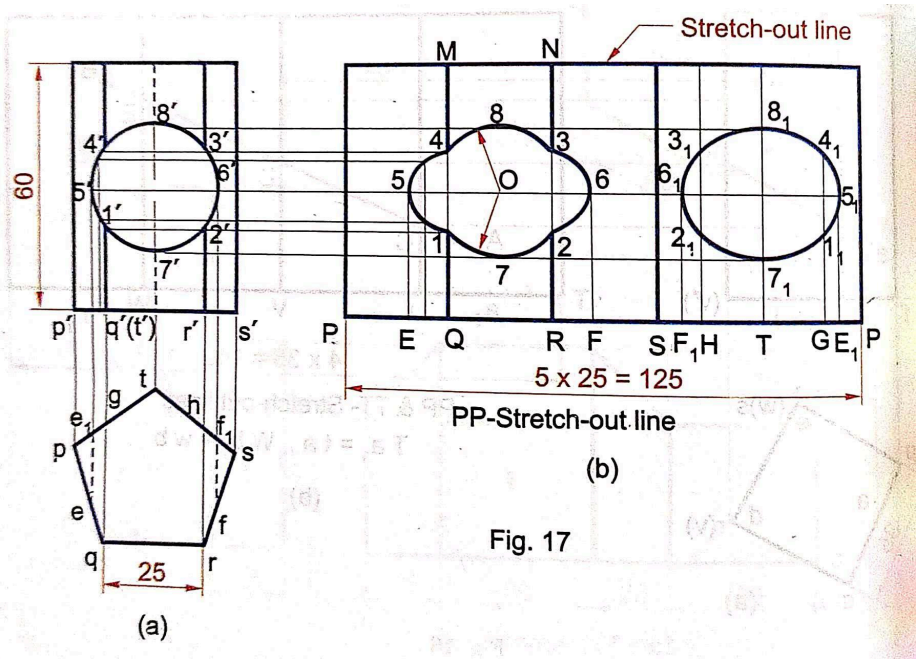

Fig. 17

19. A cylinder of diameter 40 mm and height 50 mm is resting vertically on one of its ends on the HP. It is cut by a plane perpendicular to the VP and inclined at 30° to the HP. The plane meets the axis at a point 30 mm from the base. Draw the development of the lateral surface of the lower portion of the truncated cylinder.

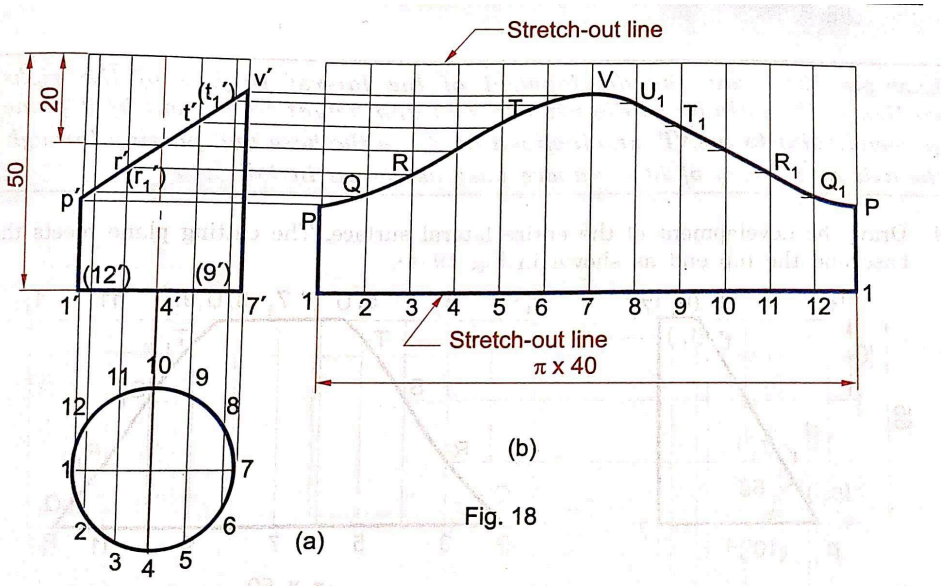

Fig. 18

20. Draw the development of the lateral surface of the right portion of the cylinder of diameter 50 mm and height 65 mm by a plane perpendicular to the VP and inclined at 60° to the base and passing through the axis at a height of 40 mm above base.

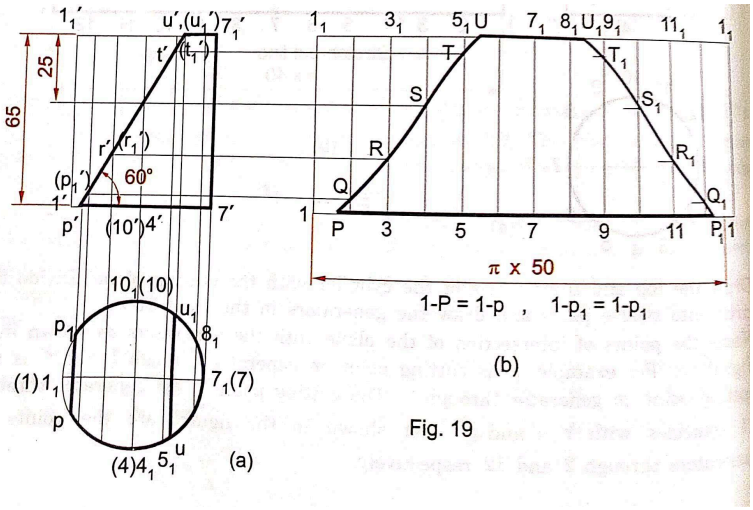

Fig. 19

21. A circular hole of diameter 30 mm is drilled through a vertical cylinder of diameter 50 mm and height 65 mm. The axis of the hole is perpendicular to the VP and meets the axis of the cylinder at right angles at a height of 30 mm above the base. Draw the development of the lateral surface of the cylinder.

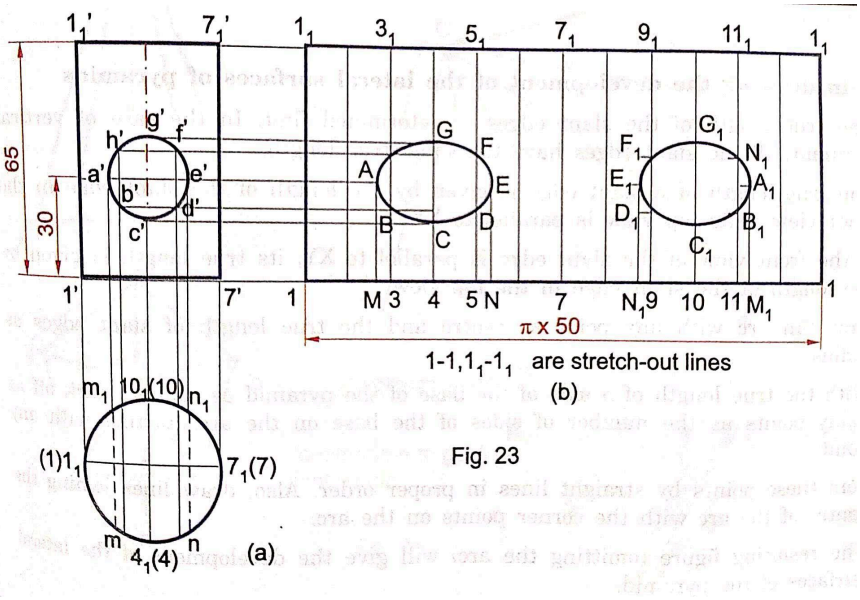

Fig. 23

22. A hexagonal pyramid of base of side 25 mm and altitude 50 mm is resting vertically on its base on the ground with two of the sides of the base perpendicular to the VP. It is cut by a plane perpendicular to the VP and inclined at 40° to the HP. The plane bisects the axis of the pyramid. Draw the development of the lateral surfaces of the pyramid.

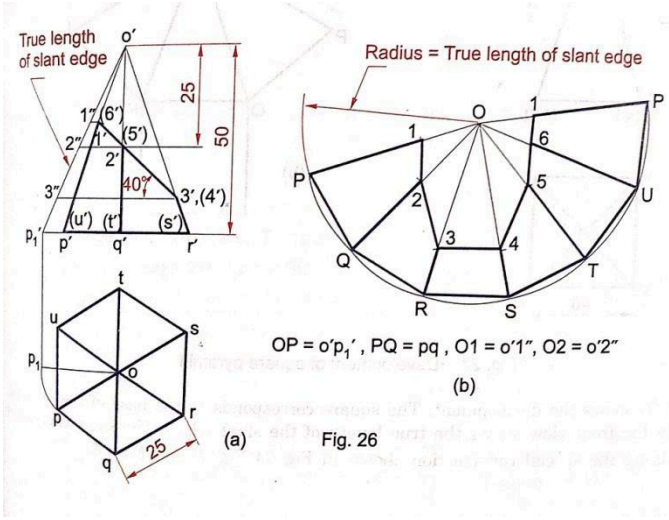

Fig. 26

23. A square pyramid of base side 25 mm and altitude 50 mm rests on its base on the HP with two sides of the base parallel to the VP. It is cut by a plane bisecting the axis. The cutting plane is perpendicular to the VP and inclined at 30° to the base. Draw the development of the lateral surfaces of the lower part of the cut pyramid.

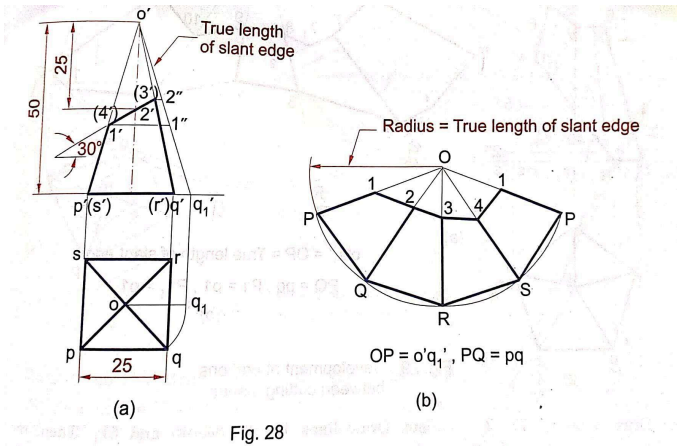

Fig. 28

24. A square pyramid of base side 35 mm and axis 60 mm rests on its base on the ground with one of the sides of the base inclined at 30° to the VP. A string is wound round the surfaces of the pyramid starting from left extreme point on the base and ending at the same point. Find the shortest length of the string required. Also trace the path of the string in front and top views.

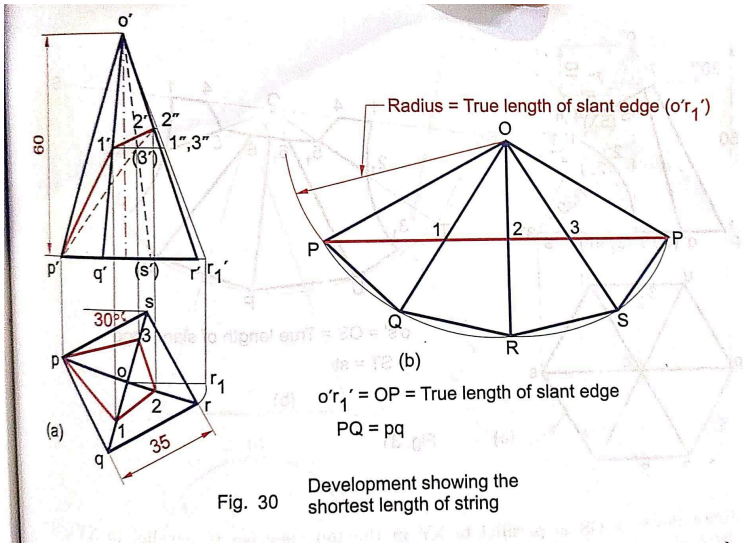

Fig. 30 Development showing the shortest length of string

25. A right circular cone of base diameter 60 mm and height 70 mm is resting on its base on the ground. It is cut by a plane perpendicular to the VP and inclined at 30° to the HP. The cutting plane bisects the axis of the cone. Draw the development of the lateral surface of the truncated cone.

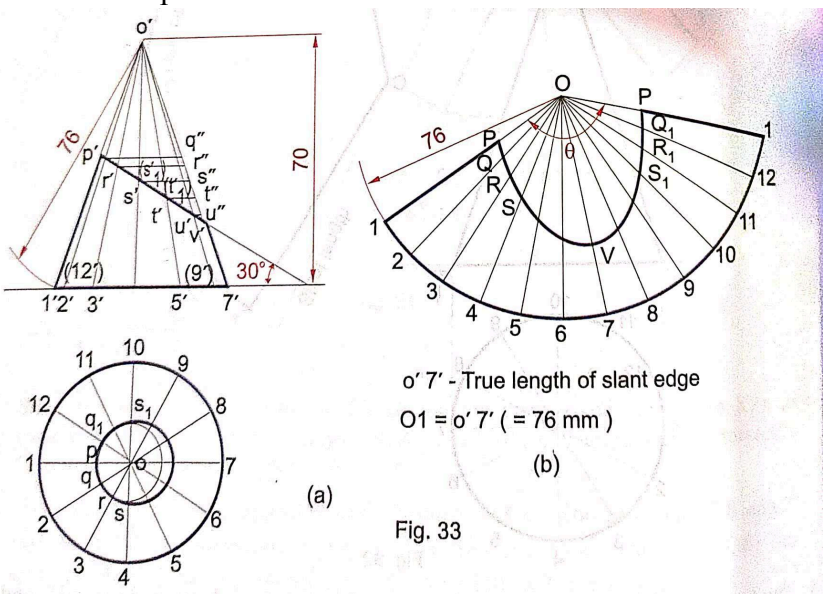

Fig. 33

26. A cone of base diameter 60 mm and altitude 70 mm rests on its base on the HP. It is cut by a plane perpendicular to both the HP and the VP and passing through the cone 10 mm to the left of the axis of the cone. Draw the development of the lateral surface of the right portion of the cut cone.

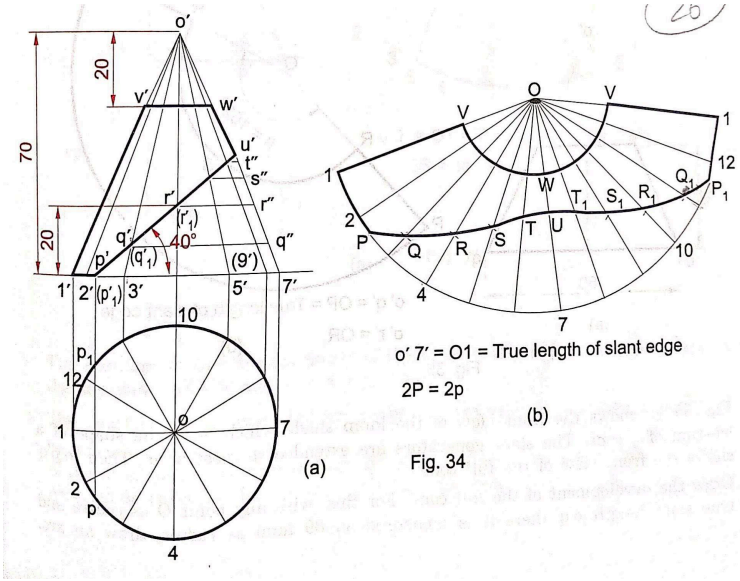

Fig. 34

27. A cone of base diameter 60 mm and height 70 mm rests vertically on its base on the ground. A string is wound round the curved surface of the cone starting from left extreme point on the base and ending at the same point. Find the shortest length of the string required. Also, trace the path of the string in the front and the top views.

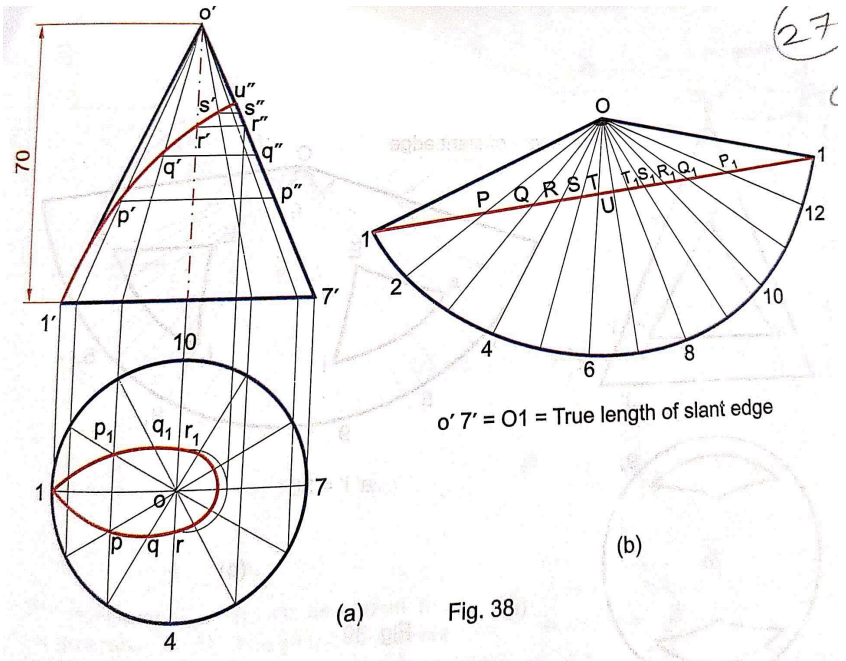

28. A hexagonal prism of base edge 25 mm and height 60 mm rests on one of its ends on the HP with a vertical face parallel to the VP. A horizontal hole of diameter 36 mm is drilled centrally right through the prism with its axis perpendicular to the VP. Draw the development of the lateral surfaces of the prism with the hole.

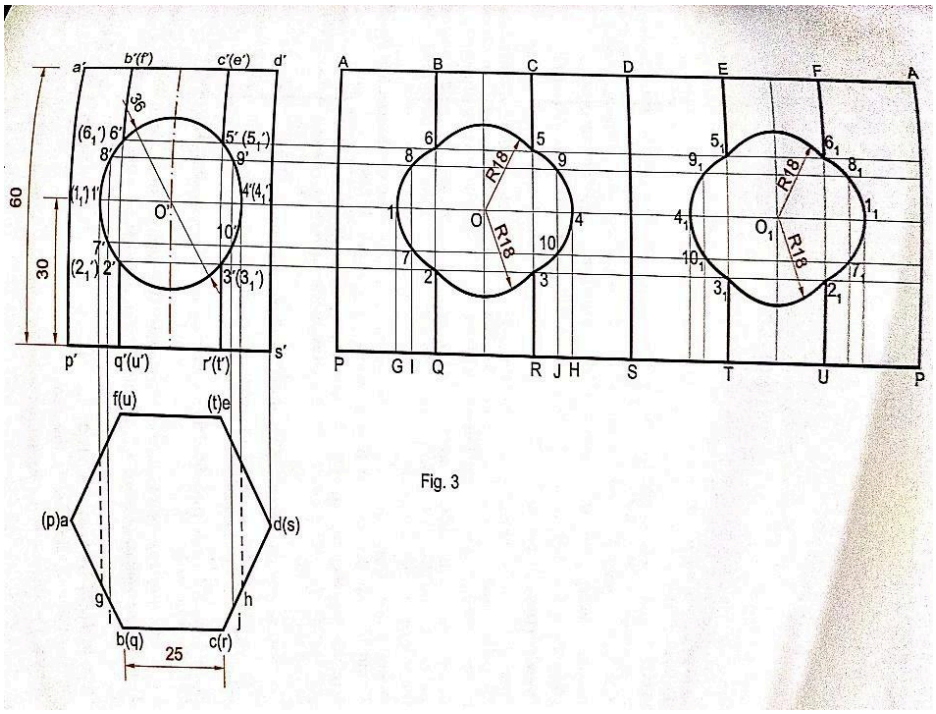

29. A hexagonal pyramid of base side 20 mm and altitude 55 mm resting on its base on the HP with a base edge parallel to the VP. A circular hole of diameter 20 mm is drilled right through the pyramid with the axis of the hole perpendicular to the VP and meeting the axis of the pyramid at 20 mm above the base. Draw the development of the pyramid with the hole.

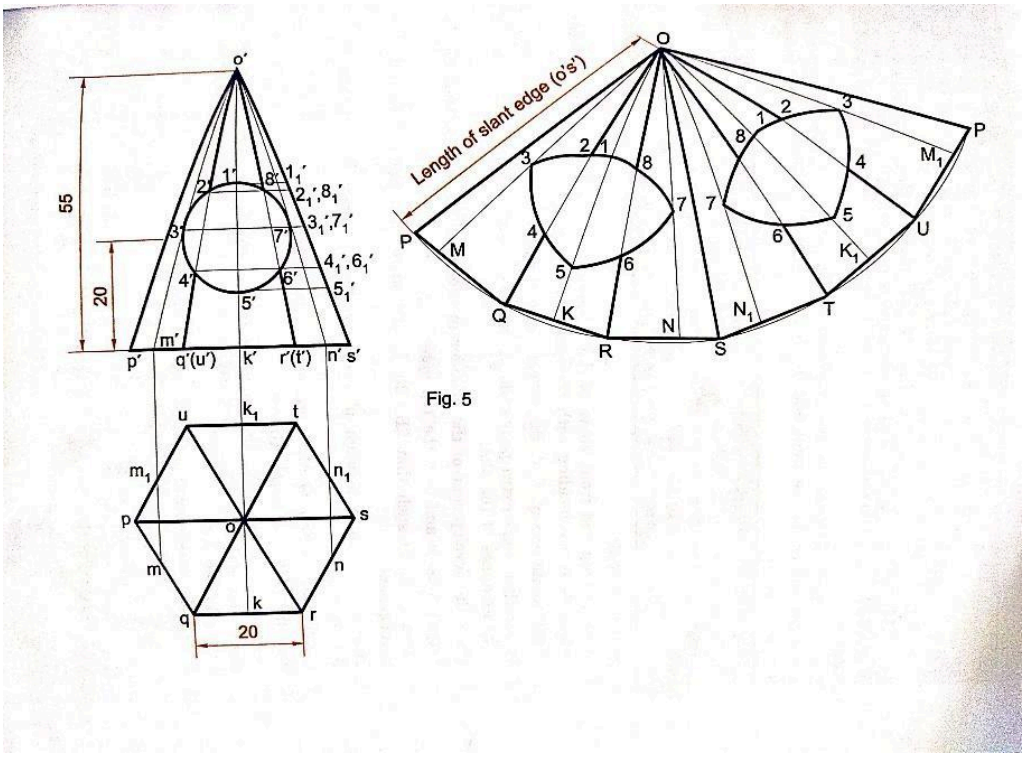

30. A pentagonal pyramid of base side 20 mm and axis length 50 mm rests on its base on the HP with a base edge parallel to the VP and further away from the VP. A square slot of diagonal 16 mm is drilled right through the pyramid such that one diagonal coincides with the axis of the pyramid. The center of the slot lies on the axis of the pyramid 20 mm above the base of the pyramid. Draw the development of the lateral surfaces of the pyramid with the cut-out when the axis of the slot is perpendicular to VP.

