Lab 8: Operational amplifiers (version 1.3)

Summary
An introduction to the operational amplifier and basic signal amplification circuits.

Learning Outcomes

- Understand the basic function of an ideal op amp.
- Build an inverting, non-inverting, and summing amplifier using op amps.
- Build a Differentiating amplifier using op amps.

Lab Goals
Build and test the three circuits below and study their performance.

Experiment/Procedure
In this lab, you will investigate how to build different electronic devices based on operational amplifiers. These devices include inverting/non-inverting and summing amplifiers and differentiators. OpAmps are generic/versatile integrated circuits that can be used to build complex electronics.

LF411 integrated circuit
The LF411 is a general-purpose operational amplifier. It comes in a variety of packages, including the dual inline pin (DIP) arrangement with two rows of four connectors. The package is oriented with a semi-circle notch located between pins 1 and 8 for orientation. (Pins 1, 5, and 8 are not used.)

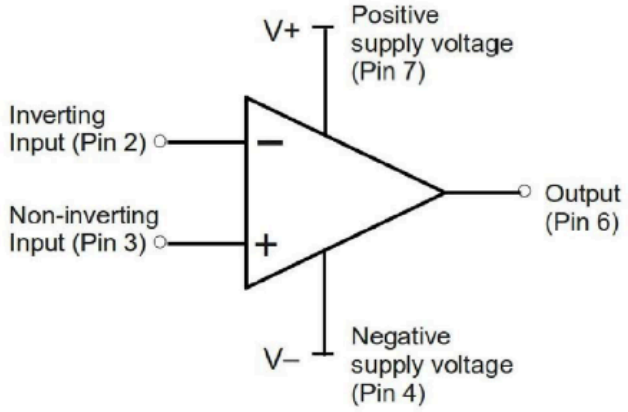

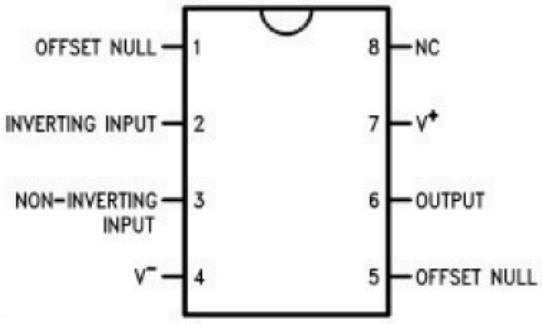

Inverting amplifier
Build your inverting amplifier circuit using the LF411 IC chip, as shown below. Use Supply voltages $V^+ = +15V$ and $V^- = -15V$.

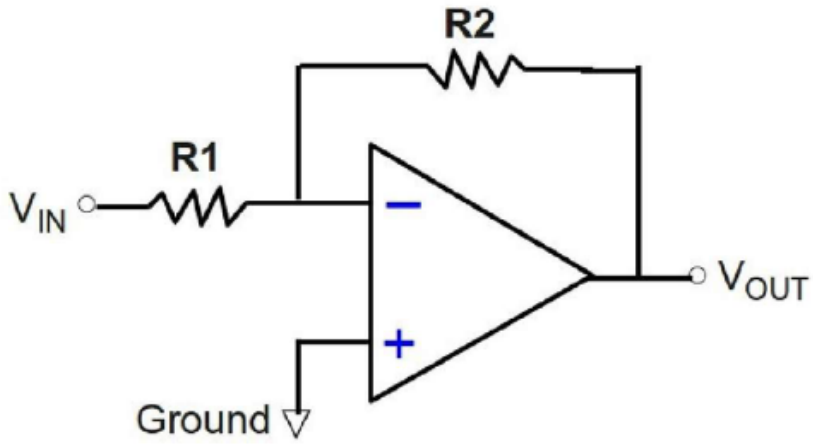

Use resistors within the 10-50 kΩ range. For example, R1 = 10 kΩ and R2 = 50 kΩ; neither value is very critical, but always measure components before placing them in the circuit. Use a function generator to supply a sine wave in VIN with frequency 1-10 kHz and amplitude < 0.5 Vpp (values not critical). Monitor VIN and VOUT in the oscilloscope in different channels. Measure and record the gain (VOUT/VIN) of the amplifier and the relative phase of VOUT with respect to VIN for ~5 different input frequencies. Save and plot oscilloscope traces of VIN and VOUT for at least one "representative" input frequency.

Replace R2 with a value close to 30 kΩ and repeat the measurement. Do the same for R1=R2. In each case, save and plot oscilloscope traces of VIN and VOUT for the same input frequency.

Make a table showing your results for the gain and phase for the three circuit configurations and show to your instructor. Compare your results with the theoretical expectations for this circuit. Discuss your results and comparisons.

Non-inverting amplifier

Build the following circuit, repeat the above three measurements for the same resistor values, save/plot representative oscilloscope traces, construct the table, and show it to your instructor. Compare your results with the theoretical expectations for this circuit and discuss your results.

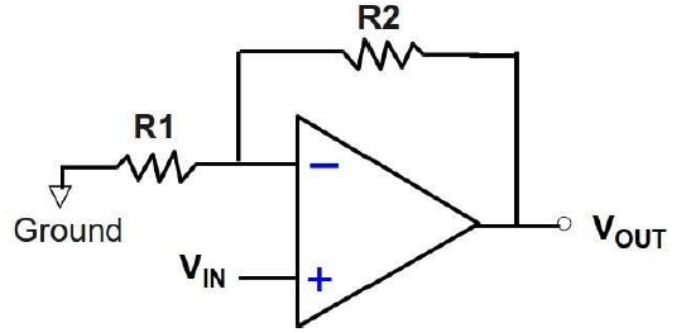

Can you build a noninverting with gain of 10? Using the non-inverting amplifier, find the frequency at which the gain drops to 1.

Summing amplifier

Build the summing amplifier circuit with gain of 1.

- Connect the function generator with the same frequency/amplitude ranges as before to V1, but leave the other inputs open. Record the gain and phase at VOUT.
- Next, connect the second input with a jumper wire between V1 and V2, leaving V3 open. Record the output.
- Finally connect all 3 inputs to the function generator and record the output.
- In each step, save and plot representative oscilloscope traces that demonstrate the summing behavior.

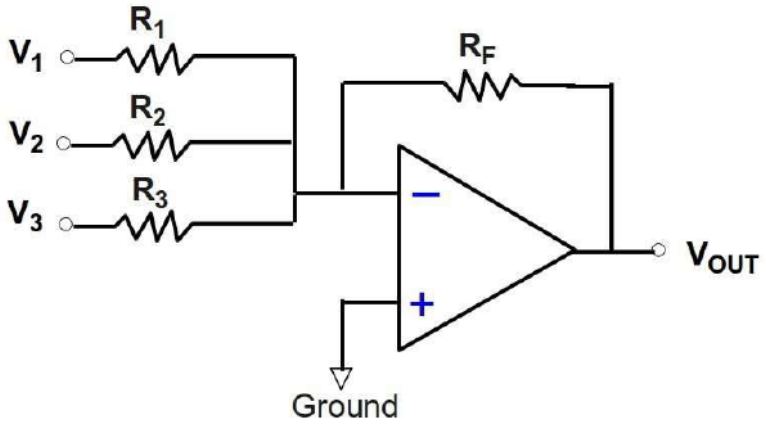

Show the results table to the instructor. Compare your results with the theoretical expectations for this circuit and discuss your results. As a final test of your summing amplifier add a DC offset to an AC signal.

Differentiating amplifier

Adding a capacitor to the input of the inverting amplifier converts it to a differentiating amplifier. Construct the following circuit with R1 ~100-500 Ω, R2 = 10-20 kΩ, and C = 10-50 nF. Values are not critical. But it is important to calculate the resulting resonance frequency to choose the proper range of frequencies to demonstrate your circuit.

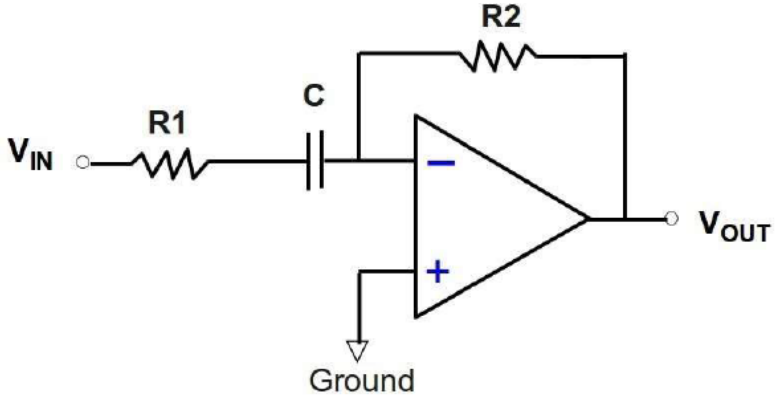

With the same sinusoidal input at frequency 1-10 kHz, the circuit will differentiate VIN at VOUT. Demonstrate its functionality. Derive the expression for the time-dependence VOUT as a function of VIN of the circuit to obtain the theoretical model. Compare your results with the theoretical expectations for this circuit and discuss your results.

Note: This circuit can also be thought of as a high-pass filter. This is because of the capacitor's frequency-dependent impedance $ZC = 1/j\omega C$. Investigate the highpass operation by choosing R1 = R2~10-20 kΩ and C = 10-50 nF (values not critical). Demonstrate high-pass operation and obtain the cuttoff frequency. Save and plot representative oscilloscope traces that demonstrate the behavior. Show results to the instructor.

Analysis

The required elements of the analysis for the different circuits are already discussed in each part. Report on your lab notebook the experimental procedure with diagrams and plots when necessary, results, analysis and discussion.